SSCL-585

SSCL-585

Superconducting Super Collider Laboratory

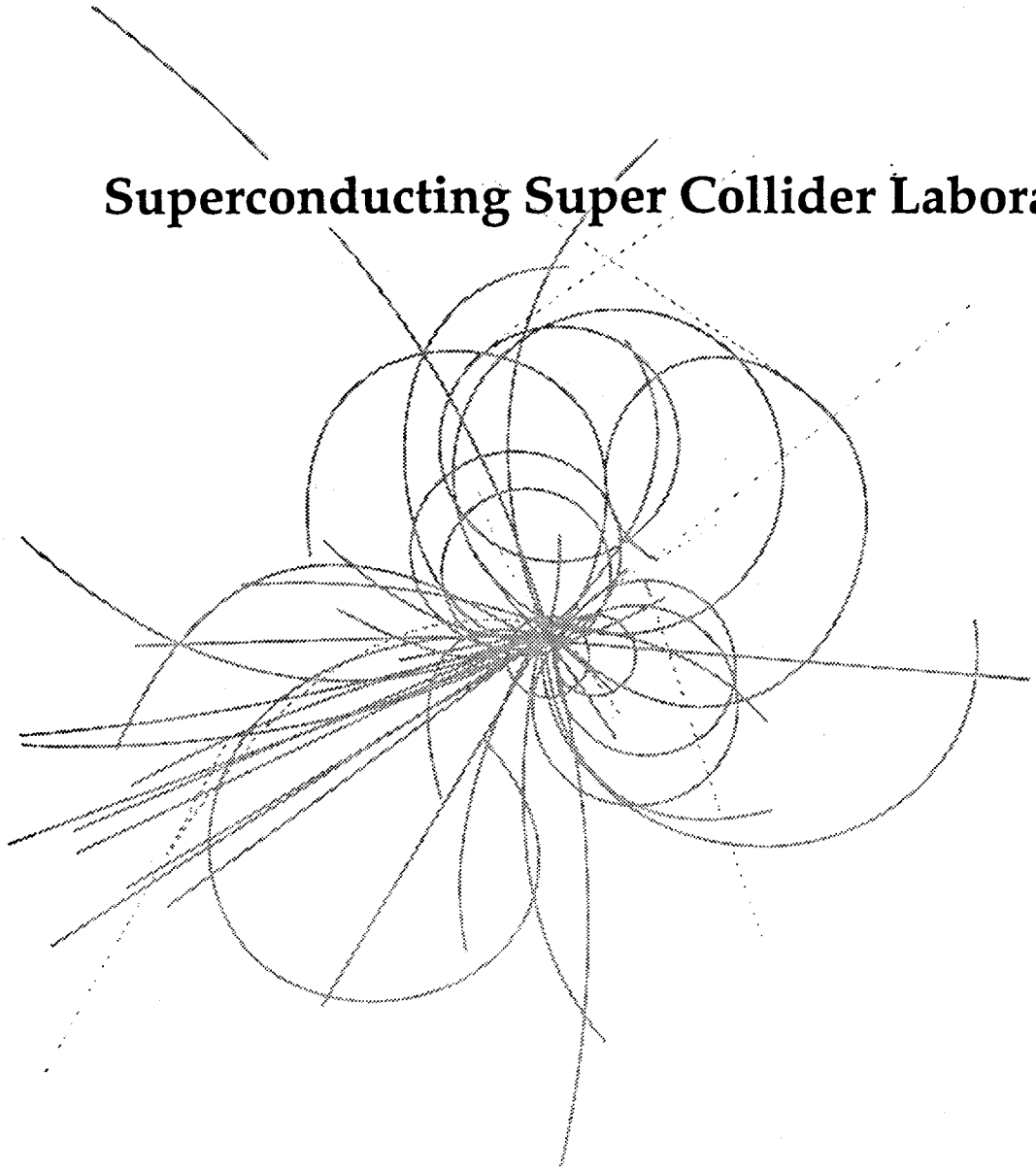

Hybrid Power Supplies for the SSC Collider

K. Smedley

September 1992

SSCL-585

Hybrid Power Supplies for the SSC Collider

K. Smedley

Superconducting Super Collider Laboratory*
2550 Beckleymeade Avenue
Dallas, TX 75237

September 1992

* Operated by the Universities Research Association, Inc., for the U.S. Department of Energy under Contract No. DE-AC35-89ER40486.

1.0 INTRODUCTION

Ripple studies[1] show that at the drive point of the magnet string, the 720-Hz-current ripple from Silicon-Controlled Rectifier (SCR) power supplies is about 0.1022 mA during the injection period and 0.0648 mA during the holding period. An emittance growth was observed when the ripple was introduced to the collider particle motion simulation code.[2,3,4] The emittance growth is especially serious during the injection period. What is an alternative power supply topology that provides high current and low ripple, yet has good reliability and reasonable cost? A hybrid power supply topology is proposed in this paper.

2.0 POWER SUPPLY SYSTEM REQUIREMENTS

The Superconducting Super Collider (SSC) consists of two vertically-separated rings, each a 20-TeV proton accelerator 87 km in circumference. The magnets in each ring are grouped in ten sectors. Each sector has a power supply unit located near the center of the magnet string[5] as shown in Figure 1. The typical current waveform for the collider magnet current is shown in Figure 2. During the injection period, the power supply units provide 700 A current to the superconducting magnet strings; during the acceleration period, the power supply units ramp up the current at a 4 A/s rate until the the magnet current reaches 7000 A. During the holding period, the power supply units are required to hold the 7000 A current for 24 hours. During the extraction period, the magnet current is ramped down at a 3 A/s rate.

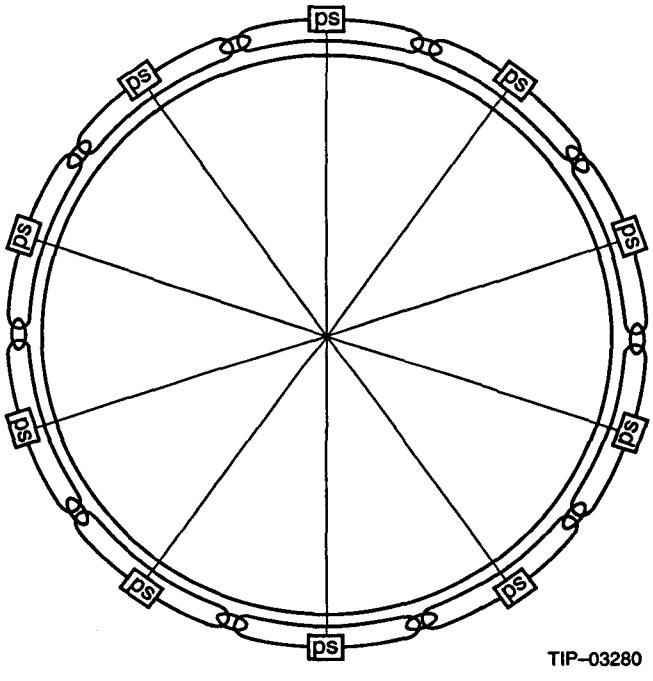

Figure 1. Collider Power Supply Location.

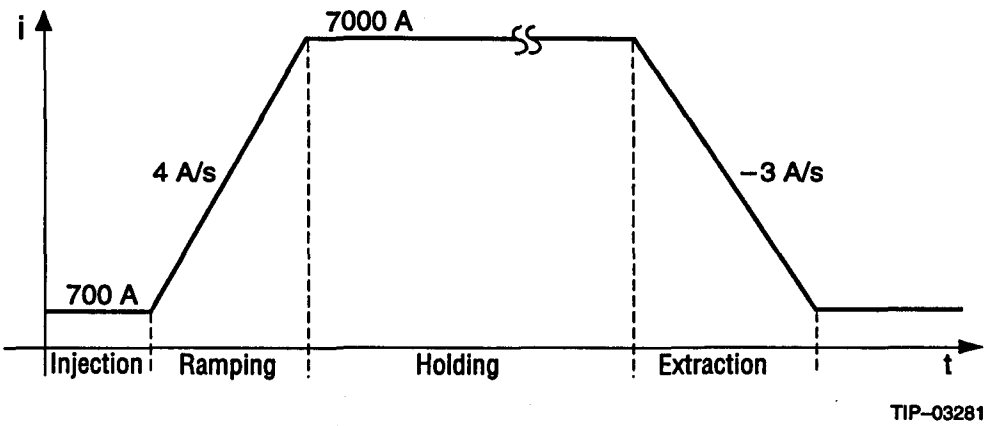

Figure 2. Typical Waveform of the Collider Magnet Current.

3.0 HYBRID POWER SUPPLY

The proposed hybrid power supply unit is shown in Figure 3. It contains a switching converter, two 12-pulse SCR converters,[6] current-sharing inductors, bypass switches, and a passive lowpass filter. The switching converter is in parallel with SCR converter I to provide current for injection and holding. SCR converter II is in series with the paralleled switching converter and SCR converter I to provide sufficient voltage for the ramping and extraction.

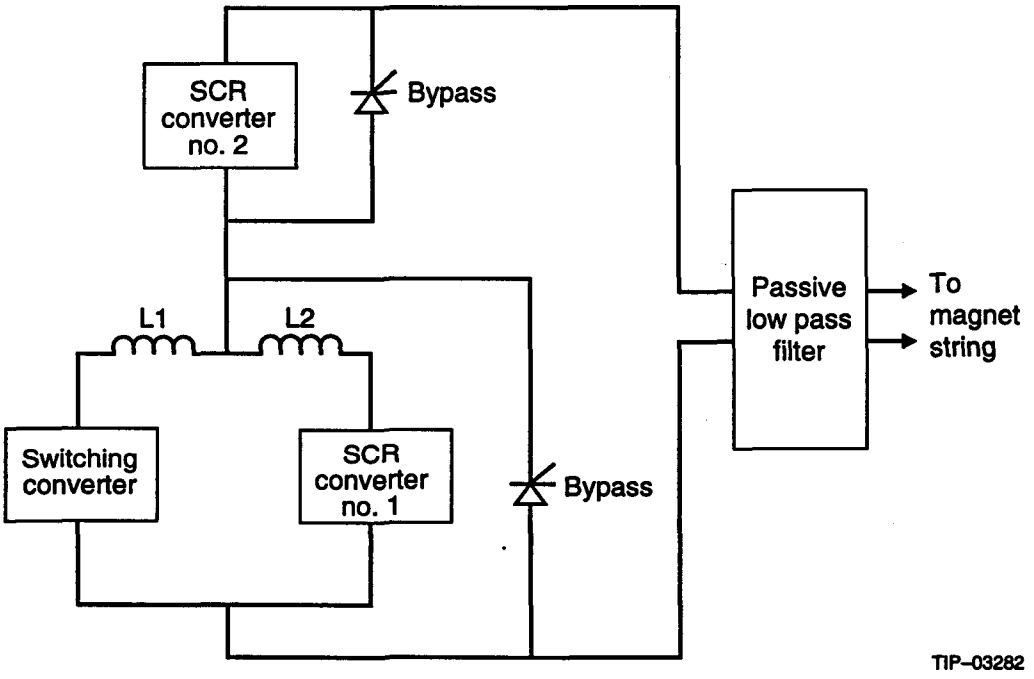

Figure 3. The Proposed Hybrid Power Supply.

During the injection period, the switching converter operates at a current of 700 A, while SCR converter I is not triggered and SCR converter II is bypassed. The switching converter is operated at a frequency of 20 kHz so that it has no audible noise. The One-Cycle Control[7] technique is used to control the switching converter so that the power line disturbance will be minimized.

During the ramping period, SCR converter II is operating to provide voltage to ramp the current, and SCR converter I is triggered in such a fashion that it provides the ramping current. The One-Cycle Controlled switching converter provides a constant dc current of 700 A and generates a complementary current ripple to compensate the ripple generated by SCR converter I so that the sum of the current is free of 720-Hz ripple.

During the holding period, SRC converter II is bypassed. The switching converter together with SCR converter I provides the holding current of 7000 A, while the switching converter provides the portion of 700-A dc current and the complementary ripple current so that the sum current is free of 720-Hz ripple.

During the extraction period, both the switching converter and SCR converter I will be bypassed, while SCR converter II operates in an inversion mode to feed back the energy from the magnet string to the power distribution line.

The operating current waveform for the hybrid power supply is shown in Figure 4.

4.0 ADVANTAGE OF HYBRID POWER SUPPLY

Switching converter technology has advanced rapidly during the last decade. Since the switching converter operates at a high frequency ($\geq$20 kHz), it has a high frequency bandwidth, low ripple, and small volume. Theoretically a switching converter with One-Cycle Control has the ability to completely reject power line ripples and to follow the reference signal in one switching cycle. If the inverted voltage ripple waveform of SCR converter I is used as the reference signal for the switching converter, the switching converter will generate a complementary ripple waveform to compensate for SCR converter ripple.

It is possible to use a pure switching converter for the collider power supply; however, due to the constraint of the semiconductor components, 200-A maximum current for fast switching, a collider power supply needs about 50 components in parallel; therefore, the reliability will be a great concern. The proposed hybrid power supply takes advantage of the high-current capability and easy inversion of the SCR converter and of the ripple compensation capability of the One-Cycle Controlled switching converter. Since the hybrid power supply used the combined technique, the number of components used will be much less than the pure switching converter approach; therefore, the reliability will be higher.

The passive low pass filter may be designed with much higher corner frequency, which will reduce the size and cost. It might be possible to completely drop the passive low pass filter.

Systematic studies and experimental research are required for the hybrid power supply operation.

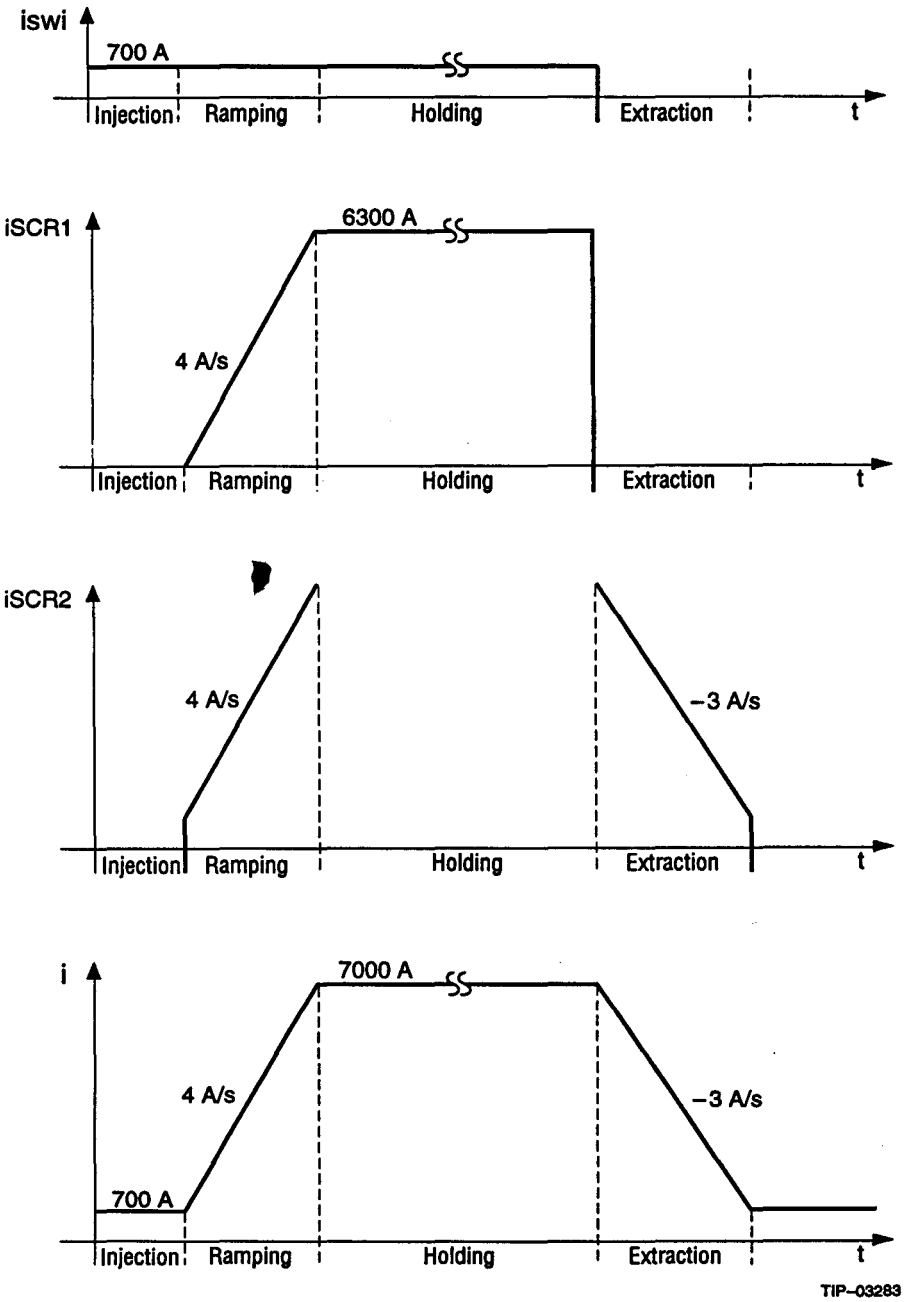

Figure 4. Current Waveform of the Hybrid Power Supply.

REFERENCES

1. K. Smedley, A. Jayasuriya, C. Christiansen, and R. Shafer "Ripple Distribution in the Magnet String of SSC Collider," SSC Lab., 1992.
2. T. Sen, Private communication.
3. B. Cole, Private communication.
4. R. Richardson, Private communication.
5. J. Sanford and D. Matthews, "Site-Specific Conceptual Design of the Superconducting Super Collider," SSC Lab., 1990.
6. K. Smedley, "Technical Requirement for Thyristor Assemblies," SSC Lab., 1991.
7. K. Smedley, "Control Art of Switching Converters," Ph.D. Thesis, California Institute of Technology, 1991.