SSCL-530

SSCL-530

Superconducting Super Collider Laboratory

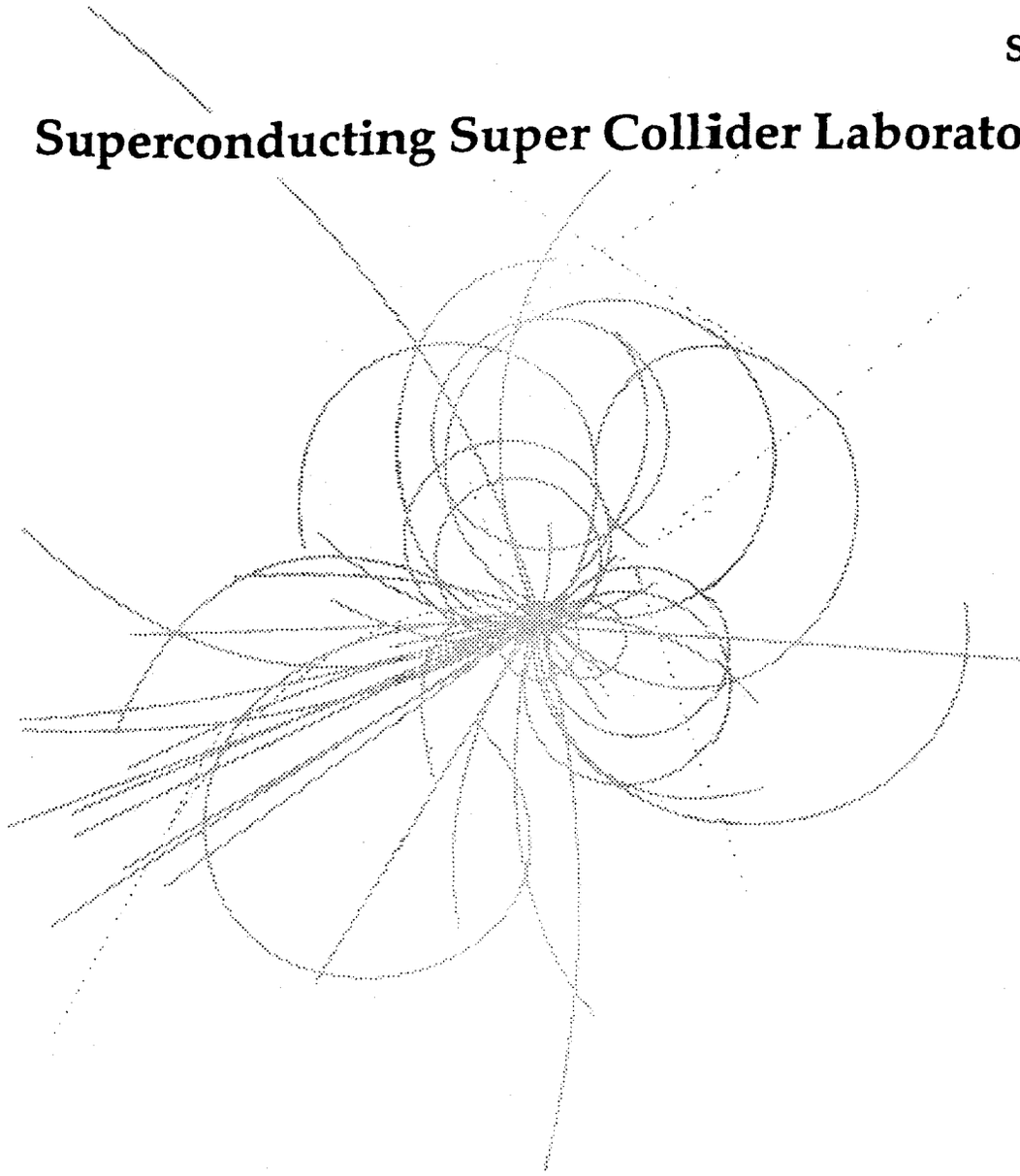

The Physical Solution to the Lorentz-Dirac Equations in a Constant Magnetic Field

D. Endres

March 1992

SSCL-530

The Physical Solution to the Lorentz-Dirac Equations in a Constant Magnetic Field

D. Endres*

Department of Mathematics and Statistics
The University of New Mexico

and

Superconducting Super Collider Laboratory†
2550 Beckleymeade Avenue
Dallas, TX 75237

March 1992

* Research supported in part by the Universities Research Association, Inc., for the U.S. Department of Energy under Contract No. DE-AC35-89ER40486 and by NSF Grant DMR-8704348.

† Operated by the Universities Research Association, Inc., for the U.S. Department of Energy under Contract No. DE-AC35-89ER40486.

SSCL-530

The Physical Solution to the Lorentz-Dirac Equations in a constant Magnetic Field

D. Endres

Abstract

The somewhat controversial Lorentz-Dirac equations for the motion of a radiating relativistic electron are shown to admit a unique physical solution in a constant uniform magnetic field perpendicular to the particle motion. In particular, the stable manifold of the origin in a four-dimensional velocity-acceleration phase space is shown to be globally the graph of a function mapping velocity to acceleration; solutions not in this manifold are shown to exhibit unphysical accelerations. Consequently, to each velocity there corresponds a unique physical acceleration determined by the stable manifold.

We consider the existence and uniqueness of physical solutions to the Lorentz-Dirac equations for the motion of a radiating relativistic electron in a constant homogeneous magnetic field perpendicular to the particle motion. Such questions have been recognized as fundamental to the classical theory of the electron by Rohrlich[1] and have been considered by numerous authors beginning with Dirac himself who formulated the equations in 1938.[2] We will answer this question in showing that the unique initial acceleration for which a solution may be regarded as physical is determined by the global stable manifold of the origin in $\mathbf{R}^4$ for Eq. (3) below. The motion corresponding to this solution is a slowly decaying spiral asymptotically agreeing with the physical solution to the linear non-relativistic radiation equation (5) of Lorentz.[3] While this result is clearly of interest in itself, it represents as well a first step toward a rigorous understanding of the classical equations of particle motion in fields characteristic of those found in the SSC. Our work will be structured as follows:

In Section 1 we begin with the Lorentz-Dirac equations in their general form as given by Dirac, specialize them to our particular case and then eliminate the time equation. In this form they are written as a first order system (3) in a pair of variables $(v, a) \in \mathbf{R}^2 \times \mathbf{R}^2$. These variables are meant to suggest velocity and acceleration as they are natural analogues for these quantities.

In Section 2 we discuss the meaning of our definition of physical as it pertains to solutions of Eq. (3), state the Main Theorem and show by a simple proposition how this follows from the Graph Theorem concerning the stable manifold of the origin.

In Section 3 we outline the proof of the Graph Theorem given in Section 4. Section 5 presents a graph theorem for the unstable manifold along with its proof. A final section presents some concluding remarks. The reader may prefer to omit Sections 4 and 5 on first reading as 4 contains the details of the proof of the Graph Theorem and 5 has been included for completeness and future reference only.

1.0 REDUCTION TO THE (v, a) EQUATIONS

The Lorentz-Dirac equations[2,4*] for the worldline $\zeta = (t, r)$ of the radiating electron in Minkowski fourspace, with the usual indefinite metric $< \zeta_1, \zeta_2 >= t_1 t_2 - r_1 \cdot r_2$, $r_i \in \mathbf{R}^3$ in the presence of an external field with tensor F_{ext} are

$$\begin{aligned} \dot{u} &= a \\ \tau_0 \dot{a} &= ma - eF_{\text{ext}} u - \tau_0 < a, a > u. \end{aligned} \tag{0}$$

* This text and Reference [1] contain the most current and detailed treatments of the difficulties with the LDE though Reference [2] remains a model of clarity. In Reference [5], Eq. (0) is considered from a different perspective.

Here dots indicate differentiation with respect to proper time $\tau, u = \dot{\zeta}$ and $\tau_0 = 2e^2/3mc^3$, is the time a light signal takes to cross 2/3 of an electron radius, approximately 6.27×10^{-24} sec. In a constant uniform z-directed magnetic field of magnitude B, Eq. (0) is easily seen[6] to specialize to

$$\begin{aligned}
\ddot{x} &= -f\dot{y} + \tau_0\left(\dddot{x} - c^{-2}w^2\dot{x}\right) \\
\ddot{y} &= f\dot{x} + \tau_0\left(\dddot{y} - c^{-2}w^2\dot{y}\right) \\
\ddot{z} &= \tau_0\left(\dddot{z} - c^{-2}w^2\dot{z}\right) \\
\ddot{t} &= \tau_0\left(\dddot{t} - c^{-2}w^2\dot{t}\right),
\end{aligned} \tag{1}$$

where $w^2 = \ddot{x}^2 + \ddot{y}^2 + \ddot{z}^2 - c^2\ddot{t}^2 = - < a, a >$ the opposite of the square of the electron's proper four-acceleration and $f = eB/mc$ (e the electron's charge, m its rest mass, and c light speed). In our case $\dot{z} \equiv 0$ so that the third of Eq. (1) is not present and Eq. (1) becomes

$$\begin{aligned}
\ddot{x} &= -f\dot{y} + \tau_0\left(\dddot{x} - c^{-2}w^2\dot{x}\right) \\
\ddot{y} &= f\dot{x} + \tau_0\left(\dddot{y} - c^{-2}w^2\dot{y}\right) \\
\ddot{t} &= \tau_0\left(\dddot{t} - c^{-2}w^2\dot{t}\right),
\end{aligned} \tag{2}$$

Setting $r = (x, y)$, $\dot{r} = cv$ and noting that, expressed in terms of this analogue velocity v, the Lorentz factor $\gamma = \dot{t} = \left(1 + |v|^2\right)^{\frac{1}{2}}$ gives a solution to the time equation in terms of a solution $\left(v(\tau), \dot{v}(\tau)\right)$ to the space equations, we obtain a second order non-linear equation in v. To write this again as a first order system we are free to choose $a = v'$ as our first equation where prime indicates differentiation with respect to some rescaled time. The time scale which simplifies our exposition is $\bar{\tau} = \frac{\tau}{\tau_0}$. Letting primes indicate $\frac{d}{d\bar{\tau}}$, Eq. (2) becomes

$$\begin{aligned}
v' &= a \\
a' &= a - \tau_0 f \mathcal{J} v + w^2 v
\end{aligned} \tag{3}$$

where the rescaled $w^2 = |a|^2 - \frac{(v \cdot a)^2}{1+|v|^2}$ and $\mathcal{J} = \begin{pmatrix} 0 & -1 \\ 1 & 0 \end{pmatrix}$.

Note: $|a|^2 \geq w^2 \geq |a|^2\gamma^{-2} \geq 0$. The quantities v, a are so analogous to velocity and acceleration that they will be referred to as such.

Let $\xi(\bar{\tau}, \xi_0) = \left(v(\bar{\tau}), a(\bar{\tau})\right)$ be the solution to Eq. (3) with $\left(v(0), a(0)\right) = \xi_0 \in \mathbf{R}^4$ and maximal interval of existence (τ_*, τ^*). We will be concerned with the solutions ξ to Eq. (3) for the remainder of our work. In particular, we will show that $\{\xi_0 |\ \xi(\bar{\tau}, \xi_0) \to 0 \text{ as } \bar{\tau} \to \tau^*\}$

is the graph of a function $A : \mathbf{R}^2 \to \mathbf{R}^2$, $A\Big(v(0)\Big) = a(0)$ and that all other solutions are unphysical in the sense of our Definition 2.

For convenience we will use the following notations:
$X(\bar{\tau}, X_0)$ denotes the solution to $\dot{X} = \mathcal{F}(X)$ with $X(0, X_0) = X_0$.
The stable manifold of an equilibrium p, denoted $W^s(p)$, is the set of points X_0 in phase space such that $\lim_{\bar{\tau}\to\infty} X(\bar{\tau}, X_0) = p$.
The ω-limit set of X_0 is the set of points p, denoted $\omega(X_0)$, for which there exists a sequence $t_n \to \infty$ such that $X(t_n, X_0) \to p$ as $n \to \infty$. The α-limit set is defined by taking sequences $t_n \to -\infty$.

We will frequently have occasion to refer to stable manifolds pertaining to different equations and so, to avoid confusion, we will employ a subscipt indicating the number of the appropriate equation.

2.0 PHYSICAL SOLUTIONS, GRAPH AND MAIN THEOREMS

Physically, equation (3) is perplexing in that the motion is not determined by v_0 alone but depends on a_0 as well. By itself then, Eq. (3) is not an equation of motion in the usual sense. Not all accelerations correspond to physically reasonable states, *e.g.*, for a free particle, non-zero accelerations ought not to be physically admissible.* For a scattering problem it is reasonable to expect scattered particles to be asymptotically unaccelerated and asymptotic vanishing of acceleration both in the future and past is one mathematical expression of what it means for a solution to be physical.† In our case it is not so clear what physical criteria are to be regarded as definitive.

Classically, in a constant magnetic field a charged particle in the plane should execute a spiral motion slowly radiating away energy-momentum according to the Larmor law. For low velocities this motion should be well approximated by the solution to the non-relativistic radiation equation of Lorentz (Eq. (5) below)[3,8]. Although this non-relativistic equation is of third order, it is linear so the initial acceleration corresponding to a classically physical solution is easily specified. The classical spiral motion is described by solutions in the stable manifold of the origin, *i.e.*, the eigenspace associated with the eigenvalues of negative real part. All other solutions eventually follow the unstable manifold of the origin and as a consequence "run away" to infinity. The stable eigenspace is a two dimensional linear subspace of physical initial conditions and forms the graph of a linear map associating to each velocity a unique physical acceleration. The principle result of this paper, the

* Ignoring preacceleration (see References [1], [2] especially, and Reference [4]).
† Eliezer, Reference [7], demonstrated the absence of such physical solutions in electron-positron scattering with cut-off Coulomb fields.

Graph Theorem. *$W_3^s(0)$ is globally the graph of a function $A : \mathbf{R}^2 \to \mathbf{R}^2, A(v) = a$, which is to say that to each v_0 there corresponds a unique $a_0 = A(v_0)$ such that the solution to (3) through (v_0, a_0) is physical.*

shows that the nonlinear relativistic equation possesses the analogous structure. This result is interpreted physically by

Definition 1: *A solution ξ to (3) is said to be physical if $\xi_0 \in W_3^s(0)$.*

It is, however, not altogether clear from a physical standpoint that Definition 1 represents the *only* asymptotic behavior possible for a classical particle. We will presently show that all other initial conditions lead to classically unphysical behavior. What is meant by "classically unphysical" is the content of

Definition 2: *A solution ξ to (3) is said to be classically unphysical if either*

$$\frac{d|v(\bar{\tau})|}{d\bar{\tau}} > 0 \textit{ for some } \bar{\tau} \in [0, \tau^*) \textit{ , or } sup_{\bar{\tau}\in[0,\tau^*)}|\xi(\bar{\tau}, \xi_0)| = \infty \ .$$

Remark. For solutions satisfying Definition 2 either $|v|$ increases, in which case the particle increases its kinetic energy, or $|v|$ decreases and $|a| \to \infty$. In the constant magnetic external field we consider, there is no component of the external force tangent to the particle velocity. If the particle's kinetic energy increases, the source of this energy must then be the radiation field. The source of the radiation field is, of course, the accelerated particle. Evidently the particle is "self-accelerating." We choose here to designate such behavior as classically unphysical on grounds that the classical conservation of energy appears to be violated. On the other hand, if $|a| \to \infty$ as $|v|$ decreases, the force on the particle due to the magnetic field decreases in proportion to $|v|$. The unbounded acceleration then results from the particle's interaction with its radiation field. Resolving the acceleration vector $a = a_{\text{rad}} + a_{\text{ext}}$ into components corresponding to radiation and external forces, where (v, a_{ext}) is the solution to (3) with $\tau_0 = 0$, since a_{ext} makes a bounded contribution to a, a_{rad} must be responsible for its own increase. Again the particle is evidently "self-accelerating" even though there is no increase of kinetic energy.*

Our first proposition shows that the definitions 1 and 2 are mutually exclusive so that Definition 2 characterizes the solutions not contained in $W_3^s(0)$.

Proposition 1. *A solution ξ to Eq. (3) such that $\xi_0 \notin W_3^s(0)$ is classically unphysical in the sense of Definition 2.*

Proof. We will prove the contrapositive, *i.e.*, suppose that $\sup_{\bar{\tau}\in[0,\tau^*)} |\xi(\bar{\tau}, \xi_0)| = m < \infty$ and $\frac{d|v|}{d\bar{\tau}} \leq 0$. Since the solution remains within a compact subset of the domain of

* For a more complete discussion see Reference [9]. A similar perspective is discussed in Reference [10], Section 75.

smoothness of the vector field (3), the continuation theorem[11,12] guarantees that $\tau^* = \infty$. Since $|v(\bar{\tau})|$ is non-increasing and bounded below, there exists an $l \geq 0$ such that

$$\lim_{\bar{\tau}\to\infty} |v(\bar{\tau})| = l \ .$$

Set $\mathcal{M}_l = \{(v,a)|\ |v| = l\}$. First, suppose $l = 0$, then $|a(\bar{\tau})| < m$ implies that the ω-limit set

$$\omega(\xi_0) \subset \mathcal{M} = \{(v,a)|\ \ |v| = 0,\ \ |a| < m\} \subset \mathcal{M}_0 \ .$$

Evaluating the vector field of Eq. (3) along the submanifold $\mathcal{M}_0$ shows that the vector field is transverse to $\mathcal{M}_0$ except at the origin so that $\{0\}$ is the only invariant set in $\mathcal{M}_0$. Since $\omega(\xi_0)$ is an invariant set[12] in $\mathcal{M}$ and the origin is the only invariant set in $\mathcal{M}$, $\omega(\xi_0) = \{0\}$ and $\xi_0 \in W_3^s(0)$.

Now we will show that $l > 0$ is impossible. Suppose

$$\omega(\xi_0) \subset \mathcal{N} = \{(v,a)|\ \ |v| = l,\ \ |a| < m\} \subset \mathcal{M}_l \ ,$$

then along every solution in $\omega(\xi_0)$,

$$\frac{d|v(\bar{\tau})|}{d\bar{\tau}} = l^{-1} v \cdot a = 0 \ .$$

This implies that $a = g\mathcal{J}v$ for some constant $g \neq 0$. From the first of equations (3), $v' = g\mathcal{J}v$ and from the second then $g^2\mathcal{J}^2 v = (g - \tau_0 f)\mathcal{J}v + w^2 v$. Noting that $\mathcal{J}v \perp v$ and $\mathcal{J}^2 = -Identity$, certainly $-g^2 = w^2 \neq 0$ which is clearly impossible. Consequently $\mathcal{M}_l$ can contain no invariant set and $l > 0$ is impossible.

The proof of the Graph Theorem is given in Section 4. Together with Proposition 1, the Graph theorem implies our

Main Theorem. *For each v_0, there exists a unique a_0 such that $\xi(\bar{\tau}, \xi_0)$, $\xi_0 = (v_0, a_0)$ is physical in the sense of Definition* 1. *Furthermore, all other solutions are classically unphysical in the sense of Definition* 2.

3.0 OUTLINE OF THE PROOF OF THE GRAPH THEOREM

The first step in the proof of the Graph Theorem consists of a nonlinear coordinate transformation into analogue intrinsic geometry coordinates* giving rise to

* Which is to say that by passing through the equations in coordinates with respect to the Frenet-Serret apparatus along the spacial trajectory, a reduction of phase space dimension is accomplished. The breakdown of the Frenet-Serret apparatus when $v = 0$ is partially mitigated by a $|v|^{-1}$-rescaling of the tangent and normal components of a which are here represented by ρ and K. See Reference [9] for details.

$$
\begin{aligned}
\beta' &= -\epsilon\rho\beta\left(1-\beta^2\right) \\
\rho' &= \rho + \epsilon\rho^2\left(1-\beta^2\right) - f^2K^2\left(1-\beta^2\right)^{-1} \\
K' &= K - 1 + 2\epsilon\rho K
\end{aligned}
\tag{4}
$$

where $\beta = \dfrac{|v|}{\sqrt{1+|v|^2}}$, $\rho = -\dfrac{v\cdot a}{\epsilon|v|^2}$, $K = \dfrac{a\cdot\mathcal{J}v}{f\sqrt{\epsilon}|v|^2}$ and $\epsilon = \tau_0^2$. We denote the coordinate change $\Phi : \mathbf{R}^4 \to \mathbf{R}^3$ by $\Phi(v,a) = (\beta,\rho,K)$. The variable ρ is meant to suggest "radiation" and is analogous to the tangential acceleration while K is proportional to the signed curvature, *i.e.*, a normal projection of acceleration. The variable β represents as usual the normalized "lab" speed $\frac{1}{c}\left|\frac{dr}{dt}\right|$. What is perhaps most important about these variables is that ρ and K are conserved quantities along $W_5^s(0)$, the stable manifold for the linearization

$$
\begin{aligned}
v' &= a \\
a' &= a - \tau_0 f\mathcal{J}v
\end{aligned}
\tag{5}
$$

of Eq. (3) at the origin. Along $W_5^s(0)$ let the constant values of ρ and K be denoted ρ_* and K_*. Equation (4) possesses an equilibrium $P_* = (0,\rho_*,K_*)$ with stable manifold $W_4^s(P_*)$ of dimension 1.

It is easy to see that $\Phi : W_3^s(0) \to W_4^s(P_*)$. Suppose $\xi_0 \in W_3^s(0)$ so that $\xi(\bar{\tau},\xi_0) \to 0$ as $\bar{\tau} \to \infty$. Since the origin is a hyperbolic equilibrium for Eq. (3), by the Stable Manifold Theorem* $W_3^s(0)$ is tangent to $W_5^s(0)$ at the origin. By the constancy of ρ and K along $W_5^s(0)$, they must approach the values ρ_*, K_* respectively along $W_3^s(0)$ as well. Considering that then $\Phi\Big(\xi(\bar{\tau},\xi_0)\Big) \to P_*$, certainly $\Phi(\xi) \subset W_4^s(P_*)$. Consequently, $\Phi : W_3^s(0) \to W_4^s(P_*)$ and every physical solution to (3) is mapped to a solution $(\beta,\rho,K) \subset W_4^s(P_*)$.

Proposition 3 uses a trapping argument along with the one-dimensionality of the manifold $W_4^s(P_*)$ (obtained from the stable manifold theorem) to show that to each $\beta_0 \in (0,1)$ there corresponds exactly one point $\Big(\beta_0,\rho_0(\beta_0),K_0(\beta_0)\Big) \in W_4^s(P_*)$. Given a $v_0 \in \mathbf{R}^2$, a β_0 is specified by Φ. From β_0 the manifold $W_4^s(P_*)$ determines a $\rho_0(\beta_0)$ and $K_0(\beta_0)$ from which one computes exactly one physical initial acceleration

$$
a_0 = A(v_0) = -\epsilon\rho_0(\beta_0)v_0 + f\sqrt{\epsilon}K_0(\beta_0)\mathcal{J}v_0
$$

by interpreting the ρ and K coordinates of Φ in terms of the tangent and normal components of acceleration.

* This theorem is standard in advanced texts on differential equations, *e.g.*, Reference [11] or the "Saddle point" theorem in Reference [12].

4.0 PROOF OF THE GRAPH THEOREM

The proof is divided among propositions. We begin by defining $\Phi : \mathbf{R}^4 \to \mathbf{R}^3$ via

$$\Phi(v,a) = \left(\frac{|v|}{\sqrt{1+|v|^2}}, -\frac{v\cdot a}{\epsilon|v|^2}, \frac{a\cdot \mathcal{J}v}{f\sqrt{\epsilon}|v|^2} \right), \quad \epsilon = \tau_0^2 \tag{6}$$

taking solutions of Eq. (3) to solutions of (4).

Note. The singularity of Φ along $|v| = 0$ demands the exercise of caution when passing information about solutions of Eq. (4) back through Φ^{-1} to solutions of (3).

The content of Proposition 2 is the conservation of ρ and K along $W_5^s(0)$ which follows from the general solution of (5) and an elementary computation.

Proposition 2. (i) *The linearization* (5) *of equations* (3) *at the origin has eigenvalues* $p_\pm \pm iq$

$$p_+ = \frac{1}{2}\Big(1 + \sqrt{\frac{1}{2}(\sqrt{1+16f^2\epsilon}+1)}\Big)$$
$$p_- = \frac{1}{2}\Big(1 - \sqrt{\frac{1}{2}(\sqrt{1+16f^2\epsilon}+1)}\Big)$$
$$q = \frac{1}{2}\sqrt{\frac{1}{2}(\sqrt{1+16f^2\epsilon}-1)}$$

(ii) *The quantities* $|v|^{-2}v\cdot a$ *and* $|v|^{-2}a\cdot\mathcal{J}v$ *are constant along the stable manifold* $W_5^s(0)$ *of the origin for Eq. (5),*

$$|v|^{-2}v\cdot a = p_-$$
$$|v|^{-2}a\cdot\mathcal{J}v = q\ .$$

Proof. Appendix

That the vector field defined by Eq. (4) has exactly two equilibria

$$P_* = (0,\rho_*,K_*) \text{ and } Q_* = \left(0, -\frac{1}{\epsilon} - \rho_*, -K_*\right)\ ,$$

is easily seen by picturing the three algebraic sets defined by $\beta' = 0, \rho' = 0$, and $K' = 0$ simultaneously. One sees that there are exactly two points of common intersection lying at the intersections of the pair of hyperbolas in the $\beta = 0$ plane defined by

$$\rho + \epsilon\rho^2 = f^2K^2 \quad \text{and } K = \frac{1}{1+2\epsilon\rho}\ .$$

Solving the resulting biquadratic gives

$$\rho_* = \frac{1}{2\epsilon}\left(\sqrt{\frac{1}{2}\left(\sqrt{1+16f^2\epsilon}+1\right)} - 1\right)\ ,\ K_* = \frac{1}{2f\sqrt{2\epsilon}}\sqrt{\sqrt{1+16f^2\epsilon}-1}\ .$$

Comparison of these formulae with the results of Proposition 2 shows that

$$\rho_* = -\frac{p_-}{\epsilon} \quad \text{and} \quad K_* = \frac{q}{f\sqrt{\epsilon}} \,. \tag{7}$$

Linearizing (4) at P_* shows that P_* is a hyperbolic equilibrium with $W_4^s(P_*)$ one-dimensional and transverse (indeed normal) to the $\beta = 0$ plane at P_*.

Proposition 3. *For each $\beta_0 \in (0,1)$ the plane $\beta = \beta_0$ is met by $W_4^s(P_*)|_{\beta>0}$ at exactly one point (β_0, ρ_0, K_0).*

Proof: Noting that the region $\{0 \le \beta < 1\}$ is invariant for the flow of (4) as the plane $\beta = 0$ is invariant and (4) is singular along $\beta = 1$, we will henceforth allow β to take values in (0,1) *only*. Since

$$\rho'|_{\rho=0} = -\frac{f^2K^2}{1-\beta^2} \le 0$$

with equality holding only along the β-axis ($K = 0$), the entire future of any initial condition (β_0, ρ_0, K_0) with $\rho_0 \le 0$ lies in the $\rho < 0$ half-space. Since P_* lies in the $\rho > 0$ half-space, $W_4^s(P_*)$ must lie in that same half-space.* Observe that $W_4^s(P_*)|_{\beta>0} \subset \{\rho > 0\}$ and $\beta'|_{\rho>0} = -\epsilon\rho\beta(1-\beta^2) < 0$ for $\beta \in (0,1)$ imply that β is strictly monotone decreasing in $\bar{\tau}$ along $W_4^s(P_*)|_{\beta>0}$. *This shows that if $W_4^s(P_*)$ meets a plane $\beta = \beta_0$, it will do so only once.* We now show that $W_4^s(P_*)|_{\beta>0}$ meets the plane $\beta = \beta_0$ for *every* $\beta_0 \in (0,1)$. Evaluating the vector field's K-coordinate along half-planes one finds

$$K'|_{\{K=0,\rho>0\}} = -1 \quad \text{and} \quad K'|_{\{K=1,\rho>0\}} = 2\epsilon\rho > 0 \,.$$

From this it is clear that the region

$$\mathcal{H} = \{(\beta, \rho, K) |\ 0 < \beta < 1,\ 0 < \rho,\ 0 < K < 1\}$$

is *backward* time invariant for the flow of (4). Consequently, since $P_* \in \{\beta = 0\} \cap \partial\mathcal{H}$ and $W_4^s(P_*)$ is transverse to the $\beta = 0$ plane, $W_4^s(P_*)|_{\beta>0} \subset \mathcal{H}$. Let

$$\mathcal{S} = \left\{ (\beta, \rho, K) | 0 < \beta < 1, \rho = \frac{\sqrt{1+4f^2\epsilon} - 1}{2\epsilon(1-\beta^2)}, 0 < K < 1 \right\} \,.$$

This $\mathcal{S}$ is a K-independent (see Figure 1) cylinder separating $\mathcal{H}$ into two open connected components $\mathcal{W}$ and $\mathcal{V}$ sharing the common boundary $\mathcal{S}$ in $\mathcal{H}$. Or explicitly, $\mathcal{H} = \mathcal{W} \cup \mathcal{S} \cup \mathcal{V}$ and

* Since the solution through every $(\beta_0, \rho_0, K_0) \in W_4^s(P_*)$ approaches P_* as a limit, its orbit may not enter the $\rho < 0$ half-space. Alternatively one may consider the backward time trapping argument for $W_4^s(P_*)$.

$$\mathcal{W} = \left\{ (\beta, \rho, K) | 0 < \beta < 1,\ 0 < \rho < \frac{\sqrt{1+4f^2\epsilon} - 1}{2\epsilon(1-\beta^2)}, 0 < K < 1 \right\} .$$

From Eq. (4) it is not hard to see that along $\mathcal{S}$ the *backward* time vector field for (4) is directed into $\mathcal{W}$ (see Figure 1) as $-\beta'|_{\mathcal{S}} > 0$ and $-\rho'|_{\mathcal{S}} < 0$. The transversality of $W_4^s(P_*)$ to the $\beta = 0$ plane at P_* and $\rho_* < \frac{\sqrt{1+4f^2\epsilon}-1}{2\epsilon}$ ensures the existence of a positive β_1 sufficiently small so that $W_4^s(P_*) \cap \{0 < \beta \leq \beta_1\} \subset \mathcal{W}$. Let (β_1, ρ_1, K_1) be defined as the point of intersection of $W_4^s(P_*)$ with the $\beta = \beta_1$ plane. The *backward* time vector field for (4) is directed into $\mathcal{W}|_{\beta \geq \beta_1}$ everywhere on $\partial(\mathcal{W}|_{\beta \geq \beta_1})$-$E$, where

$$E = \{\rho = 0, K = 0\} \cup \{\rho = 0, K = 1\} \cup \left\{\partial\mathcal{S} \cap \{K = 1\}\right\} \cup \left\{\partial\mathcal{S} \cap \{K = 0\}\right\}$$

denotes the "edges" of $\partial\mathcal{W}$. Along $E|_{\partial(\mathcal{W}|_{\beta \geq \beta_1})}$ the *backward* time vector field of (4) is parallel to and directed into $\partial(\mathcal{W}|_{\beta \geq \beta_1})$. From these last two facts we conclude that $\mathcal{W}|_{\beta \geq \beta_1}$ is trapping for backward time orbits of (4).

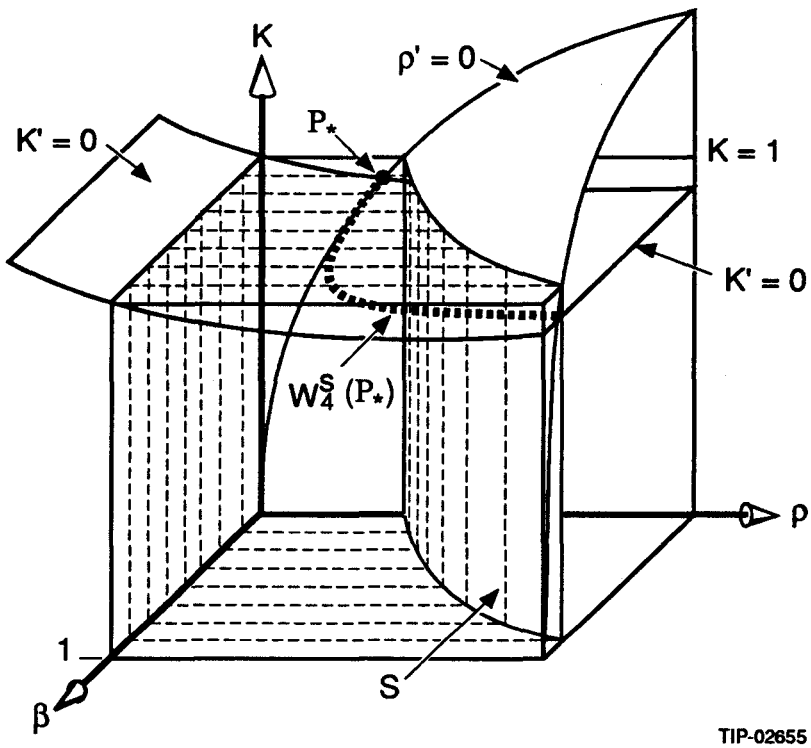

Figure 1.

Consider the solution $\Psi(\bar{\tau}) = \left(\beta(\bar{\tau}), \rho(\bar{\tau}), K(\bar{\tau})\right)$ of (4) with $\Psi(0) = (\beta_1, \rho_1, K_1) \in W_4^s(P_*) \cap \mathcal{W}$ and maximal interval of existence $(\tau_*\ , \infty)$. Backward time invariance of

$\mathcal{W}|_{\beta\geq\beta_1}$ shows $\Psi\Big((\tau_*\ ,0]\Big) \subset \mathcal{W}$. Since $W_4^s(P_*) \cap \{0 < \beta \leq \beta_1\} \subset \mathcal{W}$ and $W_4^s(P_*)$ is invariant, $\Psi([0,\infty)) \subset \mathcal{W}$ also. Finally, $W_4^s(P_*)|_{\beta\in(0,1)} = \Psi\Big((\tau_*,\infty)\Big) \subset \mathcal{W}$.

We may *not* suppose that $\sup_{\bar\tau\in(\tau_*,0]} \beta(\bar\tau) = \beta_* < 1$ because the strictly monotone increase of $\beta(\bar\tau)$ as $\bar\tau \searrow \tau_*$, together with the boundedness of $\rho(\bar\tau)$ and $K(\bar\tau)$ implied by $\Psi(\bar\tau) \subset \mathcal{W}|_{\beta\leq\beta_*<1}$ would require that $\tau_* = -\infty$ and the α-limit set $\alpha\Big(\Psi(0)\Big)$ would be an invariant set in $\mathcal{W} \cap \{\beta = \beta_*\}$. No such invariant set exists as the vector field is transverse to every $\beta = \beta_*$ plane for $\beta_* \in (0,1)$. Consequently, $\beta_* = 1$.

Proposition 4. **(Existence)** *For each $v_0 \in \mathbf{R}^2$ there exists an $a_0 \in \mathbf{R}^2$ such that $(v_0, a_0) \in W_3^s(0)$.*

Proof. Fix $v_0 \in \mathbf{R}^2$. Set $\beta_0 = \frac{|v_0|}{\sqrt{1+|v_0|^2}}$. Let ρ_0, K_0 be defined by the point of intersection of $W_4^s(P_*)$ with the $\beta = \beta_0$ plane. Define $a_0 = -\epsilon\rho_0 v_0 + f\sqrt{\epsilon}K_0\mathcal{J}v_0$. From Eq. (6) observe that $\Phi(v_0, a_0) = (\beta_0, \rho_0, K_0)$. Let $\xi(\bar\tau, \xi_0)$ be the solution to Eq. (3) with $\xi_0 = (v_0, a_0)$ and maximal forward interval of existence $[0, \tau^*)$. Since Φ carries solutions to solutions and $W_4^s(P_*)$ is invariant for (4), $\Phi\Big(\xi([0,\tau^*),\xi_0)\Big) \subset W_4^s(P_*)$. We need to take limits as $\bar\tau \to \infty$ to see that $|(v,a)| \to 0$. To do this we must know that $\tau^* = \infty$. Observe that $\Phi^{-1}\Big(W_4^s(P_*)|_{\beta\in(0,\beta_0]}\Big)$ is a bounded subset of $\mathbf{R}^4$ containing $\xi([0,\tau^*),\xi_0)$. The boundedness of $\xi([0,\tau*)$ together with our standard application of the continuation theorem gives $\tau^* = \infty$.

Since $\frac{|v(\bar\tau)|}{\sqrt{1+|v(\bar\tau)|^2}} \to 0$ as $\bar\tau \to \infty$, so must $|v(\bar\tau)| \to 0$. Since $\xi([0,\infty),\xi_0)$ is bounded and $|v(\bar\tau)| \to 0$, recalling the second paragraph of the proof of Proposition 1, $\omega(\xi_0) \subset \mathcal{M} \subset \mathcal{M}_0$ so $\xi_0 = (v_0, a_0) \in W_3^s(0)$.

Proposition 5. **(Uniqueness)** *For each $v_0 \in \mathbf{R}^2$, there exists a unique $a_0 \in \mathbf{R}^2$ such that $(v_0, a_0) \in W_3^s(0)$. Furthermore,*

$$a_0 = -\epsilon\rho_0 v_0 + \sqrt{\epsilon}fK_0\mathcal{J}v_0$$

where

$$\left(\frac{|v_0|}{\sqrt{1+|v_0|^2}}\ ,\rho_0\ ,K_0\right) \in W_4^s(P_*).$$

Proof: Suppose (v_0, a_0) and (v_0, a_1) both lie in $W_3^s(0)$ and $\Phi : W_3^s(0) \to W_4^s(P_*)|_{\beta\geq 0}$. We define $(\beta_0, \rho_0, K_0) \equiv \Phi(v_0, a_0)$. Since both $\Phi(v_0, a_0)$ and $\Phi(v_0, a_1)$ lie in $W_4^s(P_*)$ and have the same β-coordinates, by Proposition 3, they are equal. Expanding a_0 and a_1 in terms of the basis $\{v_0/|v_0|\ ,\ \mathcal{J}v_0/|v_0|\}$ in light of formula (6) for Φ, evidently

$$a_0 = a_1 = -\epsilon\rho_0 v_0 + \sqrt{\epsilon}fK_0\mathcal{J}v_0\ .$$

Consequently it is enough to show that $\Phi : W_3^s(0) \to W_4^s(P_*)|_{\beta\geq 0}$.

From Proposition 2 all eigenvalues of the linearization (5) of (3) at $0 \in \mathbf{R}^4$ have non-zero real parts. The stable manifold theorem guarantees that $W_3^s(0)$ is tangent to $W_5^s(0)$ at the origin. This tangency together with Proposition 2.(ii) and Eqs. (7) guarantees that

$$\lim_{\bar{\tau}\to\infty} \frac{(a\cdot v)(\bar{\tau})}{|v(\bar{\tau})|^2} = p_- = -\epsilon\rho_* \quad \text{and} \quad \lim_{\bar{\tau}\to\infty} \frac{(a\cdot \mathcal{J}v)(\bar{\tau})}{|v(\bar{\tau})|^2} = q = f\sqrt{\epsilon}K_*$$

for any solution $\xi \subset W_3^s(0)$. Comparing the expressions in these limits with the formula (6), evidently $\Phi(\xi) \subset W_4^s(P_*)$. Finally, recall that the image of Φ is contained in the $\beta \geq 0$ half-space.

5.0 THE UNSTABLE MANIFOLD $W_3^u(0)$

In this section we sketch the proof of a graph theorem for the unstable manifold.

Definition 3. *The unstable manifold of an equilibrium p for Eq. (n) denoted $W_n^u(p)$, is the stable manifold of p for Eq. (n) with time reversed.*

Theorem. *$W_3^u(0)$ is globally the graph of a function $\mathcal{U} : \mathbf{R}^2 \to \mathbf{R}^2$, $\mathcal{U}(v) = a$.*

As this proof is little more than a reiteration of that of the Graph Theorem everywhere replacing super-s by super-u and P_* by Q_*, we will supply only the less than obvious details.

Sketch of Proof: Again use the transformation Φ given by (6) to take (3) to (4). Minor modifications to the calculations verifying Proposition 2 give

Proposition 2$\mathcal{U}$. *The quantities $|v|^{-2}v\cdot a$ and $|v|^{-2}a\cdot\mathcal{J}v$ are constant along the unstable manifold $W_5^u(0)$ of the origin for* Eq. (5) *with*

$$|v|^{-2}v\cdot a = p_+$$
$$|v|^{-2}a\cdot\mathcal{J}v = -q\ .$$

The facts stated below Proposition 2 are of course unchanged.

The surfaces $\rho' = 0$ and $K' = 0$ are symmetric with respect to reflection through the point $(0, -\frac{1}{2\epsilon}, 0)$. Exploiting this symmetry one obtains

Proposition 3$\mathcal{U}$. $\forall\beta_0 \in (0,1)$, $W_4^u(Q_*) \cap \{\beta = \beta_0\} = \{(\beta_0, \rho_0, K_0)\}$.

Proof. $Q_* \in \{\rho < 0\}$ and is a hyperbolic equilibrium for (4) with $W_4^u(Q_*)$ one dimensional and normal to $\beta = 0$ at Q_*. As done in the proof of Proposition 4 we trap $W_4^u(Q_*)$ in a region

$$\mathcal{W} = \left\{(\beta,\rho,K)|0<\beta<1, \frac{-\sqrt{1+4f^2\epsilon}-1}{2\epsilon(1-\beta^2)} < \rho < \frac{1}{\epsilon}, -1 < K < 0\right\}$$

this time using *forward* time arguments. The rest of the details of the proof are, in light of the above, obvious modifications of those found in the proof of Proposition 3.

Propositions $4\mathcal{U}$ and $5\mathcal{U}$ are so analogous to Propositions 4 and 5 that their statements, along with their proofs, are left to the reader.

6.0 CONCLUSIONS

The Lorentz-Dirac equation (0), in the case where the external field is constant uniform magnetic, normal to the particle's plane of motion, may be written as our Eq. (3). By our Proposition 1, Eq. (3) has two mutually exclusive types of solutions: those satisfying Definition 1 and those satisfying Definition 2. For each velocity v there exists exactly one acceleration a such that the solution through (v, a) satisfies Definition 1. Solutions satisfying Definition 1 correspond in the low velocity limit to the slowly decaying spiral motion one would expect from a slightly damped oscillator, *i.e.*, a classical radiating charged particle moving in a plane under the accelerating influence of a constant uniform, normal magnetic field gradually losing kinetic energy through radiation. Solutions satisfying Definition 1 have been designated "physical" for this reason. All other solutions satisfy Definition 2 and are designated "classically unphysical". For these Definition 2 solutions, either the particle's kinetic energy increases over some interval or its acceleration $\to \infty$ as it is losing kinetic energy. As synchrotron radiation is well known to carry away kinetic energy, any increase of the particle's kinetic energy violates the conservation of energy in classical picture of the radiation process. In the second case, as the particle loses kinetic energy, the force on it due to the magnetic field decreases in proportion to the velocity. The unbounded acceleration conjunctive with decreasing speed for Definition 2 solutions must then result from a strengthening of the interaction between the particle and its radiation field *despite the weakening influence of the external force.* Such solutions evidently self-accelerate as discussed in Section 2.

Through our Main Theorem the LDE can be made to at least qualitatively portray the classical radiation process in the particular case studied here. That is, a classically physical particle world-line is uniquely described by an initial velocity v_0. This indicates that the LDE, despite the fact that it is not an equation of motion in the usual sense, can be employed as such when restricted to the stable manifold of the origin.

As to the practical matter of determining the physical acceleration, for any $v_0 = \frac{1}{c}\frac{dr}{d\tau}$, $r = (x, y)$, the formula for a_0 given in Proposition 5 provides the physical acceleration associated with v_0 based on numerically computed ρ_0 and K_0. The values of ρ_0 and K_0 can be obtained by backward time integration of (4) exploiting the forward time normal instability along $W_4^s(0)$ (see[9] for details). Alternatively one may expand in powers

of β^2 the functions $\rho(\beta), K(\beta)$ via Eq. (4) to obtain another approximation to $W_4^s(P_*)$. Error analysis and convergence questions for these approximating methods as well as $\beta \to 1$ asymptotics are also currently under consideration by the author.[9]

ACKNOWLEDGEMENTS

I am particularly indebted to my thesis advisor Professor James Ellison for his insights and for introducing me to this problem. The author is also indebted to Professor Christopher Jones for his insights and to Professors Fritz Rohrlich and Steven Parrott both of whose excellent texts,[1,4] continue to be indispensible references in this area. I would also like to acknowledge the seminal contribution of Professor Jens Lindhard who introduced Ellison to this problem and the support of the SSC Laboratory in the form of a research assistantship for much of the time while this work was in progress. Many thanks are also due to Ms. Linda Cicarella and Gloria R. Lopez for aid in the preparation of this document.

REFERENCES

1. F. Rohrlich, *Classical Charged Particles*, Addison-Wesley, 1965, and 2nd ed. 1990.
2. P. A. M. Dirac, "Classical Theory of Radiating Electrons," Proc. Royal Soc. London **A167** (1938), 148–169.
3. H. A. Lorentz, *The Theory of Electrons and its Applications to the Phenomena of Light and Radiant Heat*, B. G. Teubner, Leipzig, 1909.
4. S. Parrott, *Relativistic Electrodynamics and Differential Geometry*, Springer, 1987.
5. J. Kalchar and O. Ulfbeck, "Studies in Classical Electron Theory I: Radiation Damping and Differential Conservation Laws," Mat. Fys. Medd. Dan. Vid. Selsk. **39**, 9 (1976), 1–44.
6. A. A. Sokolov and I. M Ternov, *Radiation from Relativistic Electrons*, American Institute of Physics 1986 translation of *Reliativistskiĭ Elektron.*
7. C. J. Eliezer, "The Hydrogen Atom and the Classical Theory of Radiation," Proc. Camb. Phil. Soc. **39** (1943), 173–180.
8. G. N. Plass, "Classical Electrodynamic Equations of Motion with Radiation Reaction," Reviews of Modern Physics **33** (1961), 37–62.
9. D. J. Endres, PhD. Dissertation, University of New Mexico (in preparation).
10. L. D. Landau and E. M. Lifshitz, *The Classical Theory of Fields*, fourth English ed., Pergamon 1975.
11. E. A. Coddington and N. Levinson, *Theory of Ordinary Differential Equations*, McGraw Hill 1955, p. 330.
12. J. K. Hale, *Ordinary Differential Equations*, 2nd ed. Krieger, 1980.

APPENDIX

The linearization of Eq. (3) at the origin is

$$\begin{aligned} v' &= a \\ a' &= a - \tau_0 f \mathcal{J} v, \quad \mathcal{J} = \begin{pmatrix} 0 & -1 \\ 1 & 0 \end{pmatrix} \end{aligned}$$

The characteristic equation for Eq. (5) is

$$\lambda^2(1-\lambda)^2 = -\tau_0^2 f^2$$

from which one finds the eigenvalues

$$\begin{aligned} \lambda_1 &= p_+ + iq, \ \lambda_1^* = p_+ - iq \\ \lambda_2 &= p_- + iq, \ \lambda_2^* = p_- - iq \end{aligned}$$

with

$$\begin{aligned} p_+ &= \frac{1}{2}\Big(1 + \sqrt{\frac{1}{2}(\sqrt{1+16f^2\epsilon}+1)}\Big) \\ p_- &= \frac{1}{2}\Big(1 - \sqrt{\frac{1}{2}(\sqrt{1+16f^2\epsilon}+1)}\Big) \\ q &= \frac{1}{2}\sqrt{\frac{1}{2}(\sqrt{1+16f^2\epsilon}-1)} \end{aligned}$$

and as usual $\epsilon = \tau_0^2$. The eigen-pairs may be taken

$$\left\{ \lambda_1; \begin{pmatrix} 1 \\ i \\ \lambda_1 \\ i\lambda_1 \end{pmatrix} \right\}, \left\{ \lambda_2; \begin{pmatrix} 1 \\ -i \\ \lambda_2 \\ -i\lambda_2 \end{pmatrix} \right\}$$

and their conjugates. Letting corresponding eigen-solutions be F_1, F_2 and their conjugates, all real solutions are then given by

$$c_1 F_1 + c_1^* F_1^* + c_2 F_2 + c_2^* F_2^*$$

as the constants c_1 and c_2 vary over $\mathbf{C}$. The solutions $c_2 F_2 + c_2^* F_2^*$ foliate the stable manifold $W_5^s(0)$ of the origin for Eq. 5.

We now prove the remainder of Proposition 2, *i.e.*, the constancy of $|v|^{-2} v \cdot a$ and $|v|^{-2} a \cdot \mathcal{J} v$ along the solutions foliating $W_5^s(0)$.

Let $c_j = Re\ c_j + iIm\ c_j\ ,\ \ j = 1, 2\ .$

$$
\begin{aligned}
|v|^2 &= e^{2p_-\bar{\tau}}|c_2\begin{pmatrix} 1 \\ -i \end{pmatrix} + c_2^*\begin{pmatrix} 1 \\ i \end{pmatrix}|^2 = 4e^{2p_-\bar{\tau}}|c_2|^2 \\
v \cdot a &= 4e^{2p_-\bar{\tau}}\Big(Re\ c_2(p_-Re\ c_2 - qIm\ c_2) + Im\ c_2(p_-Im\ c_2 + qRe\ c_2)\Big) \\
&= 4p_-e^{2p_-\bar{\tau}}|c_2|^2
\end{aligned}
$$

so that $|v|^{-2}v \cdot a = p_-$ on $W_5^s(0)$. Similarly one finds $|a|^2 = 4e^{2p_-\bar{\tau}}|c_2|^2(p_-^2 + q^2)$ so that $|v|^{-2}a \cdot \mathcal{J}v = q$ on $W_5^s(0)$.