SSCL–521

SSCL–521
September 1992
Distribution Category:

I. Baishev
N. Mokhov

Firming Up the SSC Access Shafts Calculations

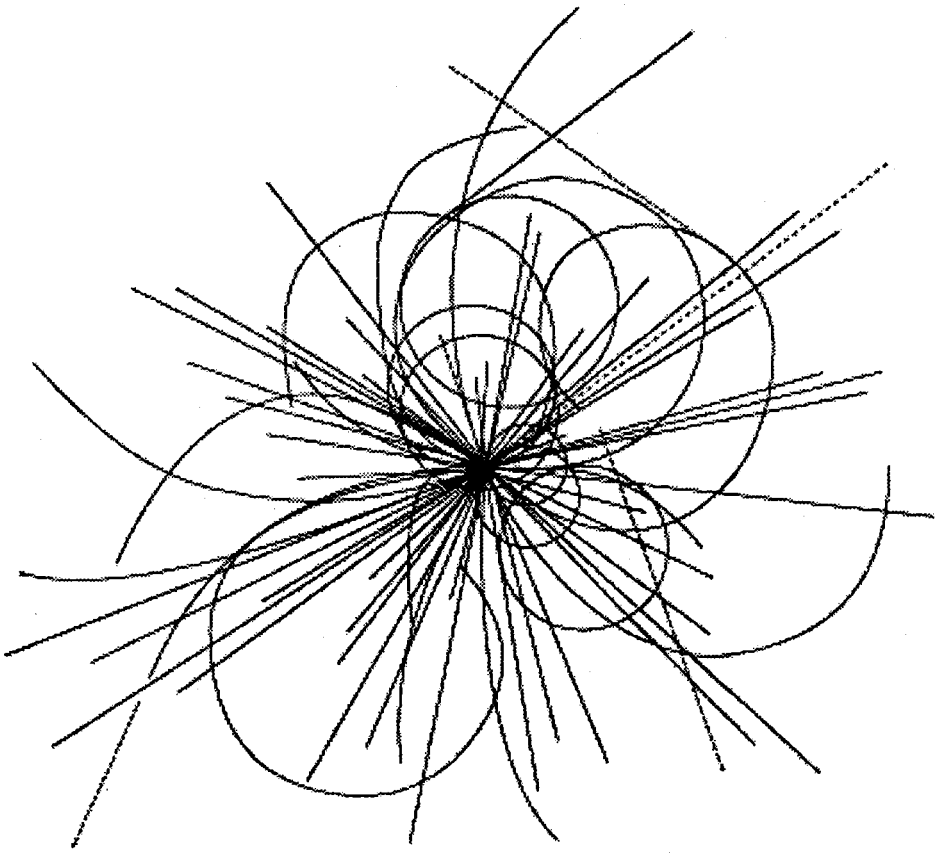

Superconducting Super Collider Laboratory

SSCL–521

Firming Up the SSC Access Shafts Calculations

I. Baishev and N. Mokhov

Superconducting Super Collider Laboratory*
2550 Beckleymeade Ave.
Dallas, TX 75237

September 1992

*Operated by the Universities Research Association, Inc., for the U.S. Department of Energy under Contract No. DE–AC35–89ER40486.

CONTENTS

FIGURES iv
TABLES v
1.0 INTRODUCTION 1
2.0 BEAM LOSS SCENARIOS 2
2.1 Scenario A – Expected Operational Beam Loss 2
2.2 Scenario B – Catastrophic Accident 2
3.0 CALCULATIONAL APPROACH AND RADIATION LIMITS 2
4.0 UPDATE GEOMETRY AND SHIELDING WALLS 2
5.0 UTILITY AND PERSONNEL SHAFTS 6
5.1 "Hammer-Head" Design and Two Scenarios 6
5.2 Underground Dose Components 7
5.3 Doses at the Shaft Top 9
6.0 VENTILATION SHAFTS 13
7.0 MAGNET DELIVERY SHAFTS 14
ACKNOWLEDGEMENTS 15
REFERENCES 17

FIGURES

1. The SSC Access Shaft Layout. Shaft definition: U—utility, P—personnel, V—ventilation, M—magnet delivery 1
2. Universal Curves for the Dose Attenuation in the Vertical Shafts. $U_2(X)$ is given by Eq. (1), $X = L/\sqrt{S}$. Upper and lower limits are taken from Reference 9 3
3. 1991 Schematic View of the SSC Utility and Personnel Shafts Connection to the Collider Tunnel 4
4. Shielding Wall Modules in the Adit. 1991 (on the left) and current (on the right) designs 5
5. "Hammer-head" Layout of the SSC Utility and Personnel Shafts Connection to the Collider Tunnel 6
6. Dose Distribution Along the Edit Entrance for Two Beam-Loss Scenarios. The adit axis is at Z_A. Contribution of hadrons is shown separately. Results for case A are multiplied here by a factor of 10 7
7. Neutron Energy Spectrum at the Bottoms of Utility and Personnel Shafts 8
8. Annual Dose at the Top of Utility and Personnel Shafts with No Shielding in the Adit as a Function of Shaft Depth. Operational Beam Loss (scenario A) 10
9. Annual Dose at the Top of Utility and Personnel Shafts with Three 2-Ft Concrete Walls in the Adit as a Function of Shaft Depth. Operational beam loss (scenario A) 11
10. Dose per Catastrophic Accident at the Top of Utility and Personnel Shafts with No Shielding in the Adit as a Function of Shaft Depth (scenario B) 11
11. Dose per Catastrophic Accident at the Top of Utility and Personnel Shafts with 2-Ft Concrete Walls in the Adit as a Function of Shaft Depth (scenario B). 12
12. Ventilation Shaft Layout 13
13. Magnet Delivery Shaft Schematic 14

TABLES

1. Annual Dose D (mrem/yr) at the Top of Utility and Personnel Shafts with Two (N = 2) and Four (N = 4) 2-Ft Concrete Shielding Walls in the Adit (Figures 3 and 4) for Beam Loss of 10^5 protons/m/s as in Reference 2. Shaft depths to the floor as of October 1991 5

2. The Dose and Fluence Characteristics at the Bottom Entrance to the Utility and Personnel Shafts in the "Hammer-head" Layout (Figure 5) with No (N = 0) and Three (N = 3) 2-Ft Concrete Shielding Walls in the Adit for Operational Beam Loss ("A", Annual Dose D and Fluence F) and for Catastrophic Accident ("B", Dose and Fluence per Event) 9

3. Dose D at the Top of Utility and Personnel Shafts in the "Hammer-head" Layout (Figure 5) with No (N = 0) and Three (N = 3) 2-Ft Concrete Shielding Walls in the Adit for Operational Beam Loss ("A", D in mrem/yr) and for Catastrophic Accident ("B", D in mrem/event). Shaft depths to the floor as of June 1992 10

4. Dose D at the Top of Ventilation Shafts (Figure 12) with Three 2-Ft Concrete Shielding Walls in the Adit for Operational Beam Loss ("A", D in mrem/yr) and for Catastrophic Accident ("B", D in mrem/event). Shaft depths to the Floor as of June 1992. 14

5. The Updated Magnet Delivery Shaft (Figure 13) Cap Thicknesses ***d*** for Operational Beam Loss ("A") and for Catastrophic Accident ("B"). Shaft depths to the floor as of June 1992 15

1.0 INTRODUCTION

A variety of the Superconducting Super Collider (SSC) access shafts are being designed to provide multi-purpose connections to the underground tunnel (Figure 1). The first calculations of radiation transport in the SSC tunnels and shafts are described in Reference 1. The radiation levels at the top of utility and personnel shafts can exceed corresponding permissible limits even in the presence of reasonable shielding walls between the Collider tunnel and the shaft mouths. A recent calculational exploration[2] of this problem has stimulated searches for a more acceptable layout of these shaft connections to the Collider tunnel. This new "hammer-head" design is described in Reference 3.

This paper addresses beam-loss scenarios as a source of radiation and the corresponding full-scale simulation results on attenuation properties of various sets of shielding walls at the tunnel level. Also discussed are radiation levels at the top of utility, personnel, ventilation, and delivery shafts for new layouts and updated depths.

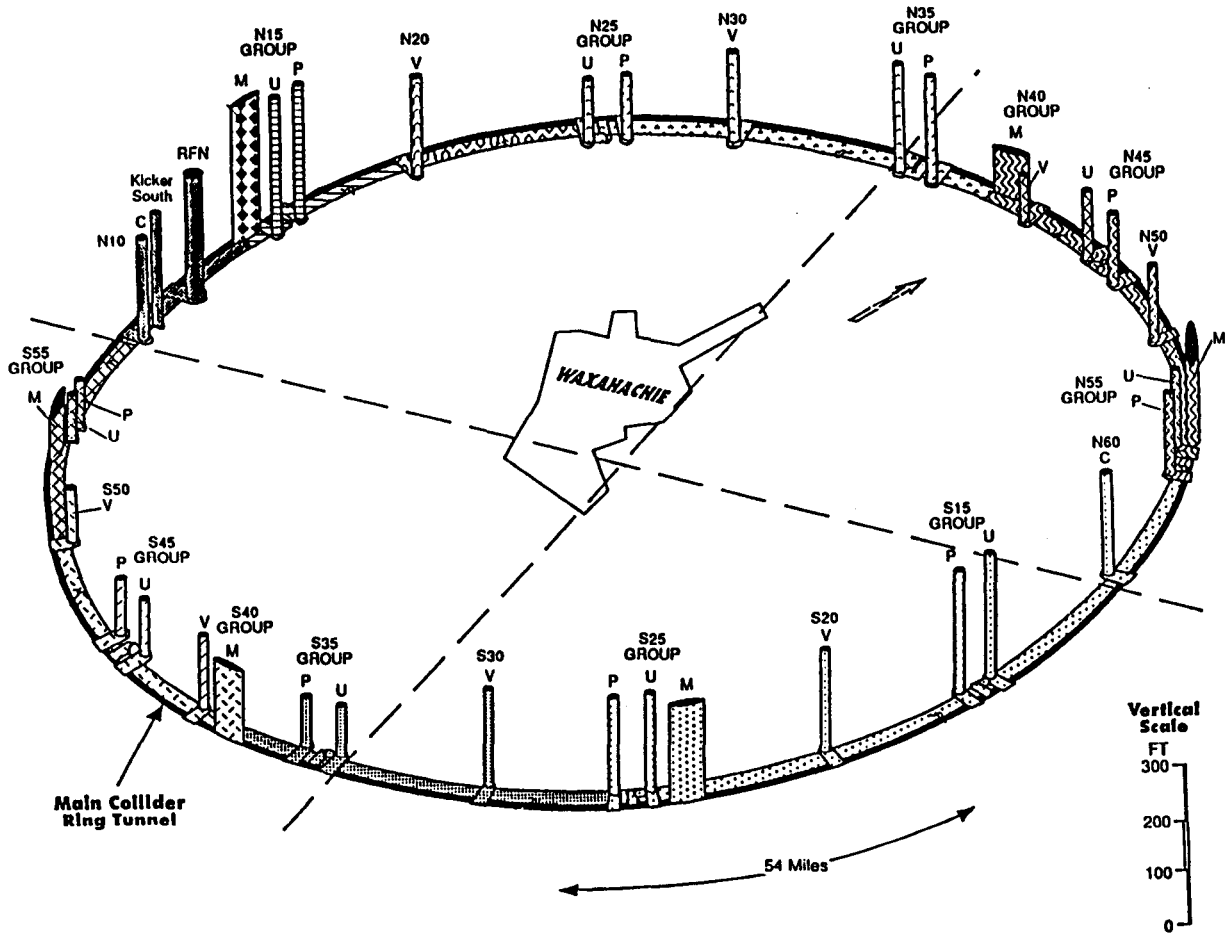

Figure 1. The SSC Access Shaft Layout. Shaft definition: U—utility, P—personnel, V—ventilation, M—magnet delivery.

2.0 BEAM LOSS SCENARIOS

Beam loss in the Collider and consequences for the lattice elements have been studied in Reference 4. One assumes the 20-TeV beam intensity to be 4×10^{14} protons in each ring (which corresponds to the upgrade luminosity of 10^{34} $cm^{-2}s^{-1}$) and operation of 6000 hours per year.[5] For design purposes two possible scenarios for beam loss in the machine must be considered:[6]

2.1 Scenario A—Expected Operational Beam Loss

This quasi-continuous loss is assumed to be uniform in the vicinity of the shafts, and its linear density is taken as 10^4 protons/m/s in each of two Collider rings. It is 2.5 times the beam-gas rate for the Site-Specific Conceptual Design Review (SCDR) gas pressure model[4,5], and it matches the cryogenic system capacity over the whole Collider. For an operational year it gives 2.16×10^{11} protons/m/yr, or about 2×10^{13} protons/yr per one-half standard cell in each of the rings.

2.2 Scenario B—Catastrophic Accident

One supposes a quasi-instantaneous (300 μs) loss of a whole beam (4×10^{14} protons) on the beam pipe. From the beam parameters at 20 TeV one has the maximum incident angle 0.15 mrad and a cascade region of a few meters long.[4] A real disaster results with melting of a beam pipe and the coils[4] and an explosion of one or two magnets with corresponding consequences for the whole machine and environment. Beam loss of such a type must be completely excluded by an extremely reliable beam abort system; however, to exclude any impact on the environment even in this case, radiation shielding parameters should accommodate this event. To have a really worst-case scenario, one assumes the beam loss location just upstream of the region of interest, with maximum secondary particle yield right at the center of the region, *i.e.*, the adit axis for the shaft design. This scenario is the most conservative one.

3.0 CALCULATIONAL APPROACH AND RADIATION LIMITS

Using the current version of the MARS Monte Carlo system[7] MARS12 code, we perform a full-scale simulation of hadronic cascades induced in the lattice elements by beam loss and consequent particle production and transport in the Collider tunnel, adits, shafts,equipment, concrete shells and shielding in the energy range 20 TeV–0.5 eV. Transport of neutrons with energy below 14.5 MeV is carried out in a multi-group approach.[8] All the important details of the Collider lattice elements and the geometry of the underground tunnels and vertical shafts are taken into account. Simplifications are made only in the description of the geometry of conventional and technical systems.

In order to avoid unnecessary repetition of the simulations of neutron transport in the vertical shafts themselves, only one overall Monte Carlo run has been made for each of the specific layouts (the deepest shaft). Then the results for the dose vertical attenuation have been presented in the form of a"universal curve"[1] and fitted as

$$U_2(X) = (1 + X)^{(-2.275-0.384\ln(1+X))}, \tag{1}$$

where $X = L/\sqrt{S}$, L is the vertical distance from the shaft mouth, and S is the shaft cross-section square. These"universal curves," which should be valid for second and third labyrinth sections (in the absence of a direct vision), are shown in Figure 2 with the data from Reference 9. The form of Reference 9 with parameters found by Joe Coyne:

$$U_2(X) = (1 + 6.023\ X^{1/2} - 4.781\ X^{2.5} + 4.425\ X^3)^{-1} \tag{2}$$

fits our Monte Carlo results even better and coincides with data,[1] but in the remainder of the paper the corresponding dose at the top of the smaller depth shafts was recalculated using the more conservative fit of Eq. (1).

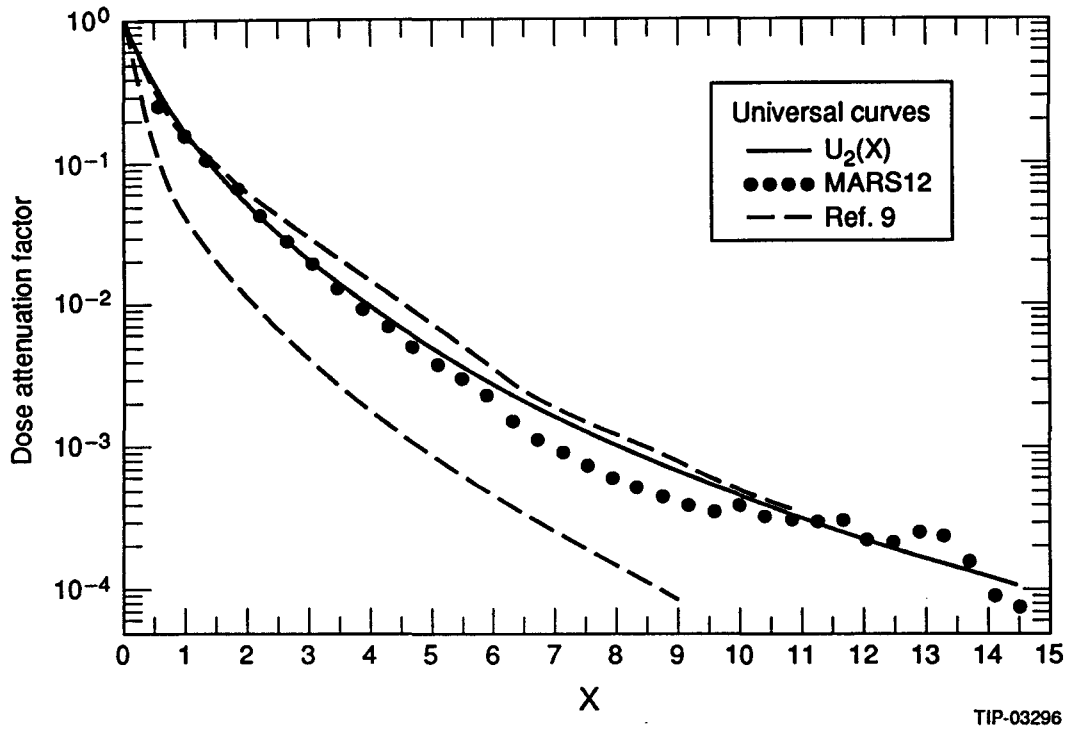

Figure 2. Universal Curves for the Dose Attenuation in the Vertical Shafts. $U_2(X)$ is given by Eq. (1), $X = L/\sqrt{S}$. Upper and lower limits are taken from Reference 9.

Shaft design and shielding parameters are optimized to meet the SSC radiation safety requirements. The top of the delivery shaft is an Uncontrolled Area, so the annual dose equivalent there must not exceed 20 mrem. For any single accident the limit is 10 mrem. The Collider service buildings at the top of utility, personnel, and ventilation shafts are specified as Continuously Occupied Radiation Areas, with the corresponding permissible limits equal to 0.25 mrem/h routinely and 100 mrem per accident inside the buildings. Corresponding measures must be taken to allow the areas outside the service buildings to be the Uncontrolled Areas.

4.0 UPDATE GEOMETRY AND SHIELDING WALLS

Since the earliest studies[1] many changes to the shafts have occurred. The major changes are the increase of the Collider tunnel diameter to 14 ft, an update of the equipment layout in the tunnel and adits, and new shaft elevations. All of these, as well as a new utility and personnel shaft layout shown in Figure 3, have been taken into account in the calculational study.[2]

A set of shielding walls was proposed to be installed in the adit in the area starting 17.6 ft from the beam line to 29.5 ft. Two schemes were considered at this region (Figure 4):

- 2 walls—two stationary shielding modules
- 4 walls—four shielding modules with two movable walls.

Each module consists of:

- 2-ft ordinary concrete wall (with moving ability in the second scheme), 9 ft high and 20 ft wide
- 9-ft high and 10-ft wide-pass
- stationary upper shield in the region above 9 ft made of 2-ft ordinary concrete with two ventilation ducts (3-ft diameter) and three 1.5-ft-diameter cryo headers.

Based on the full-scale MARS12 calculations, the following conclusions have been made:

- the overall attenuation efficiency of the shielding modules is rather high, so the dose at the entrance to the vertical utility shaft scales as 1000:70:25 for the case with no shielding, with two shielding modules, and with four shielding modules, respectively
- a presence of cryo headers and especially of ventilation ducts makes the possible shielding efficiency of the 4-module set significantly worse
- doses calculated at the top of the shafts for routine beam loss (scenario A times 10) and presented in Table 1, are lower than the old results,[1] but still exceed the permissible limits.

The situation is significantly worse for a catastrophic accident (scenario B). Moreover, 1991 ventilation requirements indicated 8-ft distance between shielding walls, which practically excluded the 4-wall option in the considered case (1-1/3 ft above). A new solution described in the next section was developed.

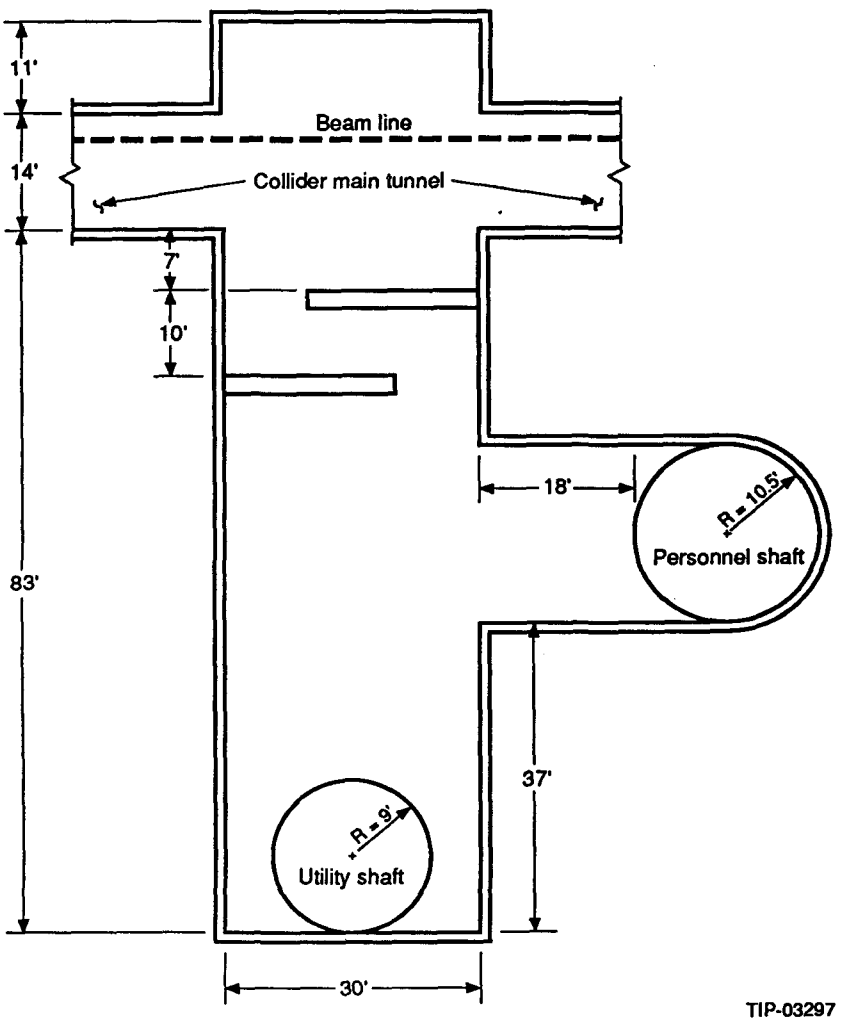

Figure 3. 1991 Schematic View of the SSC Utility and Personnel Shafts Connection to the Collider Tunnel.

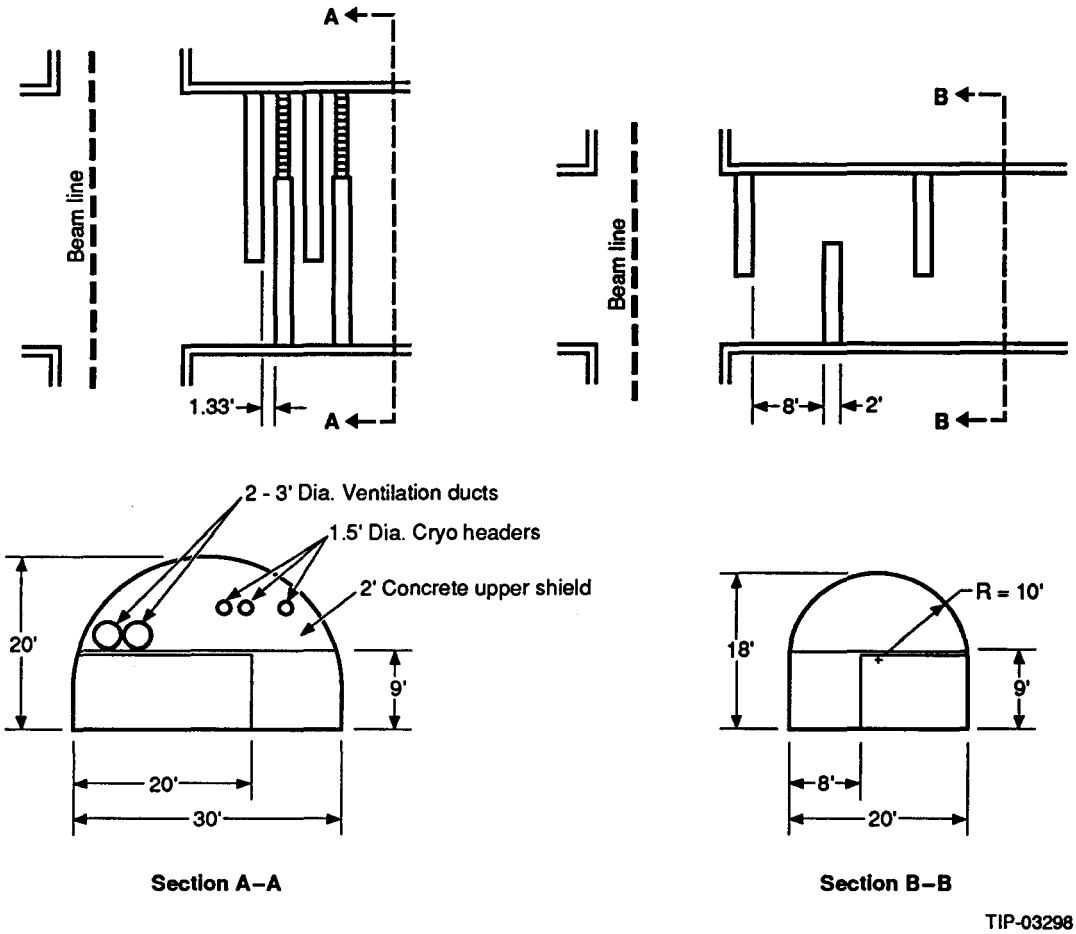

Figure 4. Shielding Wall Modules in the Adit. 1991 (on the left) and current (on the right) designs.

TABLE 1. ANNUAL DOSE D (MREM/YR) AT THE TOP OF UTILITY AND PERSONNEL SHAFTS WITH TWO (N = 2) AND FOUR (N = 4) 2-FT CONCRETE SHIELDING WALLS IN THE ADIT (FIGURES 3 AND 4) FOR BEAM LOSS OF 10^5 PROTONS/M/S AS IN REFERENCE 2. SHAFT DEPTHS TO THE FLOOR AS OF OCTOBER 1991.

Shaft	Depth (ft)	Utility (N = 2)	Utility (N = 4)	Personnel (N = 2)	Personnel (N = 4)
N15	228	9	3	6	2
N25	97	420	150	260	65
N35	192	14	5	10	3
N45	140	56	20	37	9
N55	162	26	9	18	5
S15	248	7	3	5	1
S25	197	13	5	9	2
S35	104	270	96	196	49
S45	95	450	160	280	70
S55	71	1400	500	1010	253

5.0 UTILITY AND PERSONNEL SHAFTS

5.1 "Hammer-Head" Design and Two Scenarios

Figure 5 shows a schematic of a newly developed design for the utility and personnel shafts and underground tunnels. Shaft mouths are located at the ceiling level of the satellite tunnel connected to the collider tunnel by the adit. The shafts mouths are not in the direct view of the collider rings—the source of prompt radiation. The adit is free of any bulky equipment, and it is long enough to place up to three 2-ft concrete shielding walls in it without violation of ventilation requirements, *etc.* With 8-ft passes and 8-ft gaps between the walls there is no need for shielding in the ventilation ducts. The estimated overall cost is about the same or lower than the Figure 3 design.

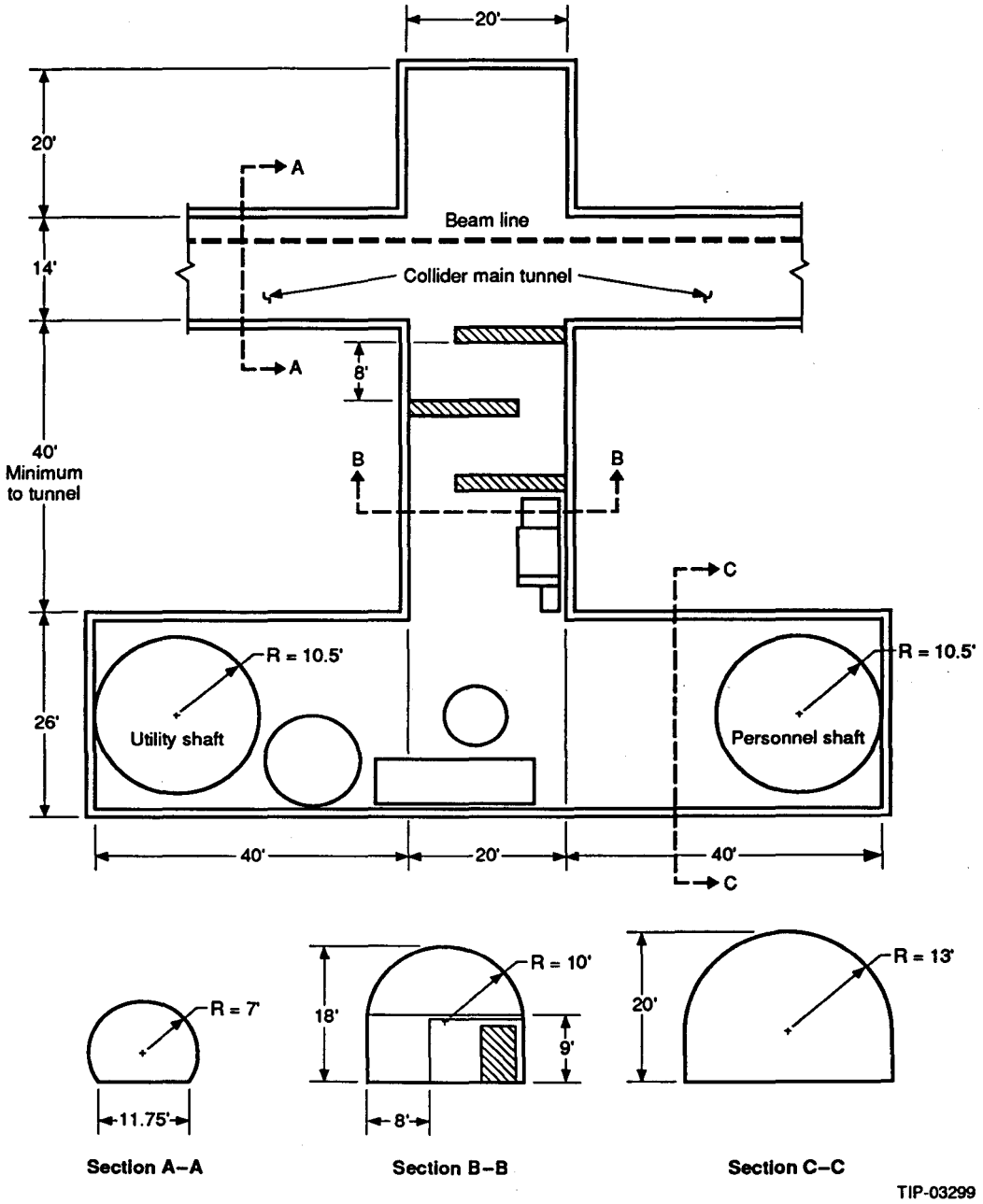

Figure 5. "Hammer-head" Layout of the SSC Utility and Personnel Shafts Connection to the Collider Tunnel.

Full-scale MC calculations have been done for the hammer-head layout. The major equipment (transformers, cold compressor, and distribution valve box) has been included in calculations. Equal 21-ft shaft diameters and 40-ft satellite levers, as well as the updated shaft depths, are being taken into account. Both beam-loss scenarios have been considered. Results on the maximum dose equivalent are presented below for the cases with and without shielding walls in the adit.

First, Figure 6 shows how different doses are at the adit entrance for scenarios A and B. As it is defined in Section 2.0, catastrophic beam loss occurs upstream of the adit to bring a maximum dose into the satellite, *i.e.*, with the maximum yield at the passage axis. Dose for a single catastrophic accident averaged over the adit entrance area is about 50 times the annual dose for the operational beam loss. In case B approximately 25% of the dose is due to prompt hadrons with energy E > 14 MeV; in case A the figure is approximately 18%. It results in the increase of the above difference to more than 100 times the annual dose in the satellite and shafts themselves (see below).

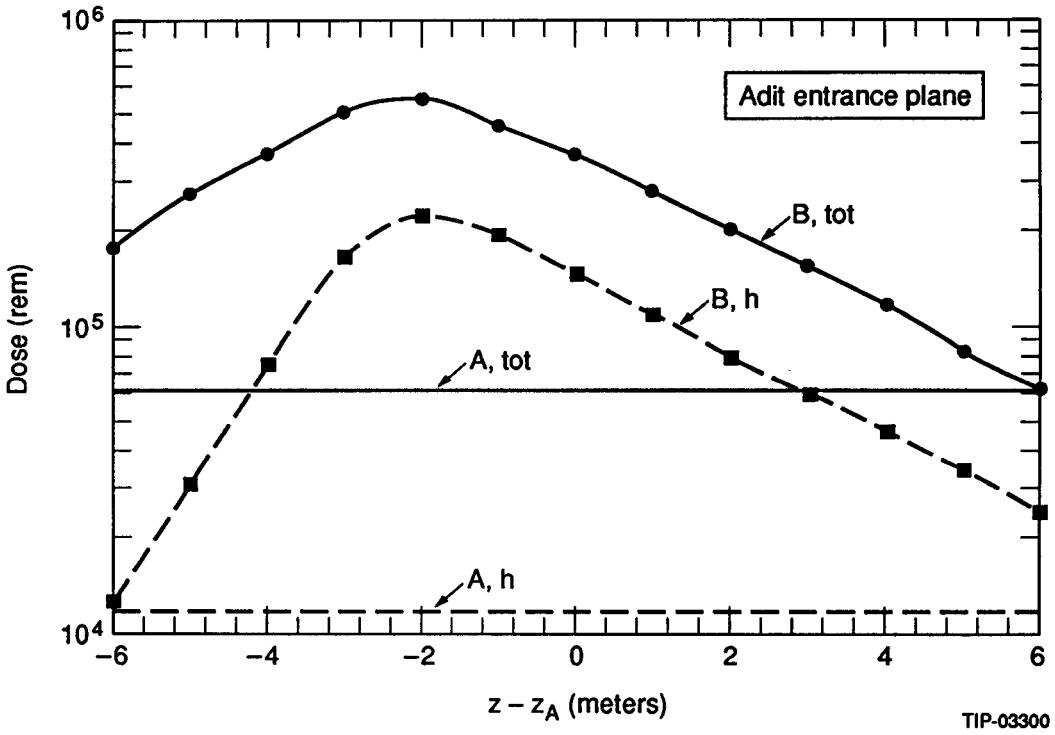

Figure 6. Dose Distribution Along the Adit Entrance for Two Beam-Loss Scenarios. The adit axis is at Z_A. Contribution of hadrons is shown separately. Results for case A are multiplied here by a factor of 10.

5.2 Underground Dose Components

The neutron energy spectrum at the end of the satellite averaged over the entrances of utility and personnel shafts is shown in Figure 7 for the catastrophic accident case. It is interesting to note the pronounced 1-MeV peak, which dominates in the Collider tunnel,[1] followed by a flat *1/E* tail. Later in the vertical shaft this peak disappears, making the spectrum much softer.[1]

The calculated dose and fluence at the bottom entrance to the shafts are presented in Table 2 for both scenarios and for the adit with and without shielding walls. The neutron kerma factor in silicon is given as well.

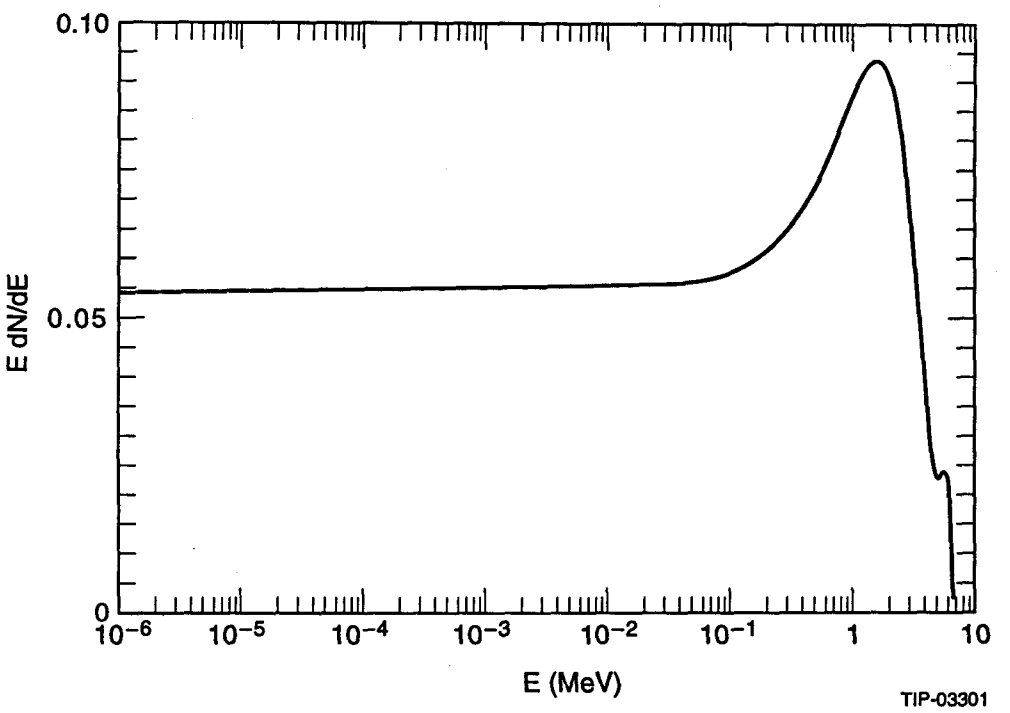

Figure 7. Neutron Energy Spectrum at the Bottoms of Utility and Personnel Shafts.

Also shown in Table 2 is the contribution to the dose of

- h—hadrons with E>14 MeV,
- n(h)—neutrons of 0.5 eV–14 MeV energy range,produced by hadrons,
- n(n)—neutrons produced by neutrons of 0.5 eV–14 MeV energy range.

One can notice that attenuation efficiency of the 3-wall set in the adit is about a factor of 200 for case A and 65 for case B. It is lower in case B because the first shielding wall is almost useless for the accepted distribution at the adit entrance. But in reality, it obviously works, increasing this efficiency up to that of case A, because the beam loss spot is distributed randomly along the beam pipe. A single catastrophic accident brings to the shafts 85 to 400 of the annual doses for the operational beam loss of the type in case A.

TABLE 2. THE DOSE AND FLUENCE CHARACTERISTICS AT THE BOTTOM ENTRANCE TO THE UTILITY AND PERSONNEL SHAFTS IN THE "HAMMER-HEAD" LAYOUT (FIGURE 5) WITH NO (N = 0) AND THREE (N = 3) 2-FT CONCRETE SHIELDING WALLS IN THE ADIT FOR OPERATIONAL BEAM LOSS ("A", ANNUAL DOSE D AND FLUENCE F) AND FOR CATASTROPHIC ACCIDENT ("B", DOSE AND FLUENCE PER EVENT).

Value	Particle	Utility, "A"	Utility, "B"	Person, "A"	Person, "B"
		N = 0			
D (rem)		1.8	154.8	1.8	213.2
	h	0.1	0.9	0.7	0.5
D (%)	n(h)	1.8	14.5	5.6	28.9
	n(n)	98.1	84.6	93.7	70.6
F(cm^{-2}), 10^9		0.37	20.8	0.24	31.4
k, 10^{-11}		0.52	1.30	1.09	1.20
		N = 3			
D (rem)		0.007	2.78	0.011	2.87
	h	0.5	2.4	0.2	5.6
D (%)	n(h)	54.1	9.7	60.8	14.8
	n(n)	45.4	87.9	39.0	79.6
	h	7.00	7.00	7.00	7.00
[Note 1] D/F, 10^{-8}	n(h)	1.37	1.99	1.70	1.85
	n(n)	0.88	0.83	1.45	0.61
[Note 2] F(cm^{-2}),10^7		0.06	30.9	0.07	40.1
[Note 3] k, 10^{-11}		2.21	1.84	3.06	1.9

Note 1. D/F in rem × cm^2
2. F is a total neutron fluence at E > 0.5 eV
3. k (rad × cm^2) is a silicon kerma factor

5.3 Doses at the Shaft Top

The calculated doses at the top of all the SSC utility and personnel shafts for the hammer-head layout (Figure 5) are presented in Table 3 and in Figures 8–11 both for routine beam loss (scenario A) and catastrophic accident (scenario B). Results for two cases with and without shielding walls in the adit are given.

One can see how good the new geometry is compared to the previous ones. The results show the absolute necessity of the shielding walls in the adit. With walls installed no shafts need additional shielding to meet the worst case B.

TABLE 3. DOSE D AT THE TOP OF UTILITY AND PERSONNEL SHAFTS IN THE "HAMMER-HEAD" LAYOUT (FIGURE 5) WITH NO (N = 0) AND THREE (N = 3) 2-FT CONCRETE SHIELDING WALLS IN THE ADIT FOR OPERATIONAL BEAM LOSS ("A", D IN MREM/YR) AND FOR CATASTROPHIC ACCIDENT ("B", D IN MREM/EVENT). SHAFT DEPTHS TO THE FLOOR AS OF JUNE 1992.

SHAFT	DEPTH (FT)	UTILITY, "A"	UTILITY, "B"	PERSON, "A"	PERSON, "B"
		N = 0			
N15	230.0	0.54	45.9	0.53	63.3
N25	129.0	5.52	467.0	5.43	643.0
N35	196.2	1.05	89.1	1.04	123.0
N45	160.6	2.36	200.0	2.32	275.0
N55	174.4	1.70	144.0	1.67	198.0
S15	250.0	0.38	32.2	0.37	44.4
S25	199.0	0.99	84.1	0.98	116.0
S35	107.0	11.10	937.0	10.90	1290.0
S45	97.4	15.60	1320.0	15.30	1818.0
S55	73.0	42.50	3590.0	41.80	4950.0
		N = 3			
N15	230.0	0.002	0.83	0.003	0.85
N25	129.0	0.022	8.39	0.033	8.66
N35	196.2	0.004	1.60	0.006	1.65
N45	160.6	0.009	3.59	0.014	3.70
N55	174.4	0.007	2.58	0.010	2.67
S15	250.0	0.002	0.58	0.002	0.60
S25	199.0	0.004	1.51	0.006	1.56
S35	107.0	0.043	16.80	0.067	17.40
S45	97.4	0.061	23.70	0.094	24.40
S55	73.0	0.165	64.50	0.255	66.60

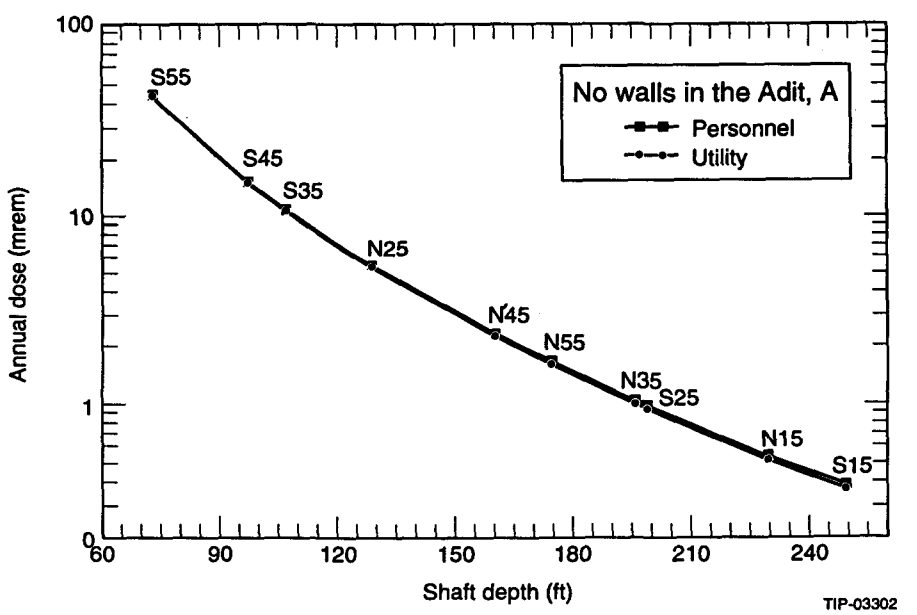

Figure 8. Annual Dose at the Top of Utility and Personnel Shafts with No Shielding in the Adit as a Function of Shaft Depth. Operational beam loss (scenario A).

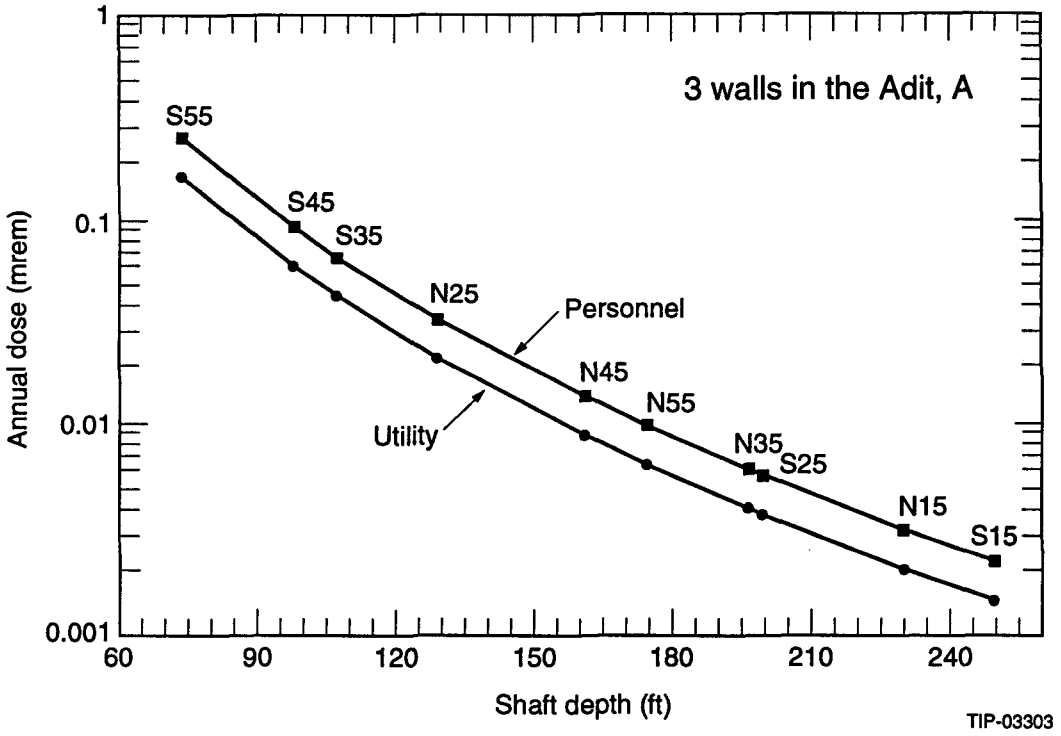

Figure 9. Annual Dose at the Top of Utility and Personnel Shafts with Three 2-Ft Concrete Walls in the Adit as a Function of Shaft Depth. Operational beam loss (scenario A).

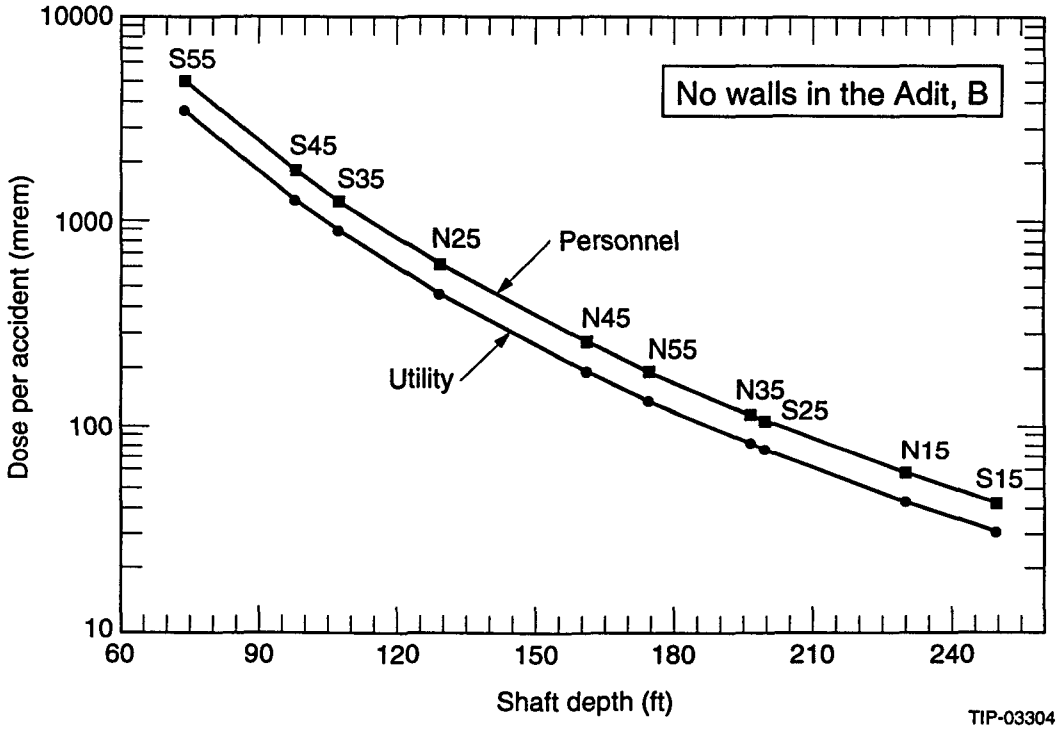

Figure 10. Dose per Catastrophic Accident at the Top of Utility and Personnel Shafts with No Shielding in the Adit as a Function of Shaft Depth (scenario B).

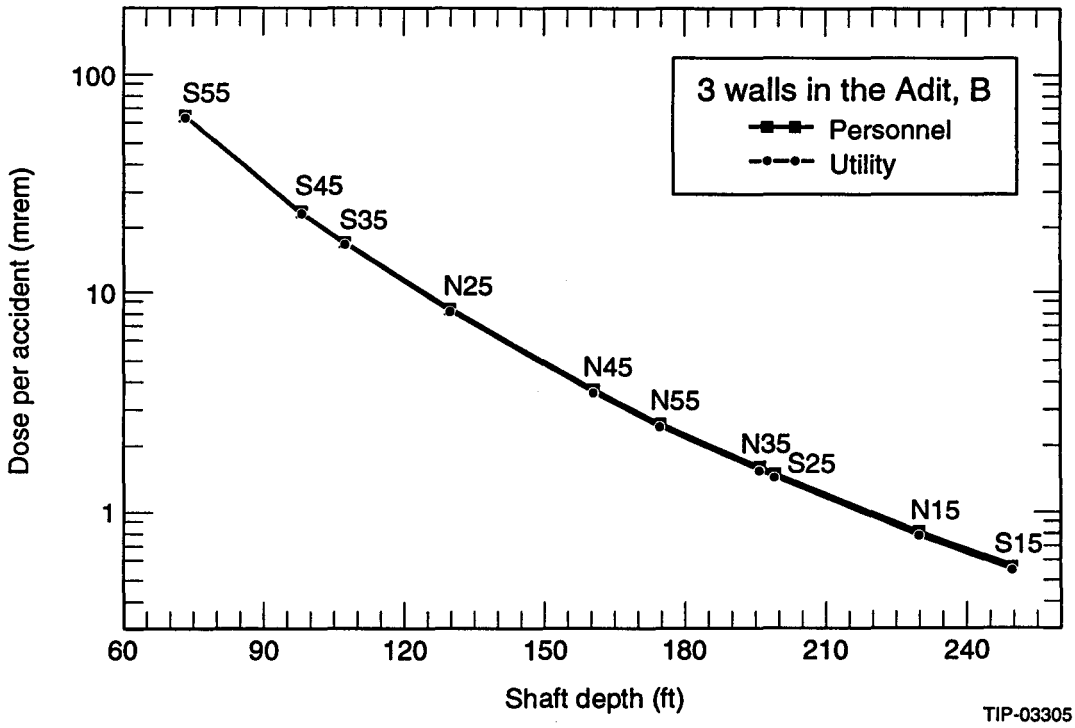

Figure 11. Dose per Catastrophic Accident at the Top of Utility and Personnel Shafts with Three 2-Ft Concrete Walls in the Adit as a Function of Shaft Depth (scenario B).

6.0 VENTILATION SHAFTS

A design of ventilation shafts (Figure 12) is very similar to the hammer-head design of the previous section. Therefore, the dose at their bottom entrance is rather close to that for the personnel shafts. The dose at the top of the ventilation shafts then is calculated using Eq. (1) for the dose vertical attenuation. The results for the corresponding shaft depths are presented in Table 4 for the 15-ft diameter shaft. For all the shafts the dose in the presence of three 2-ft concrete shielding walls in the adit is below the tolerable value.

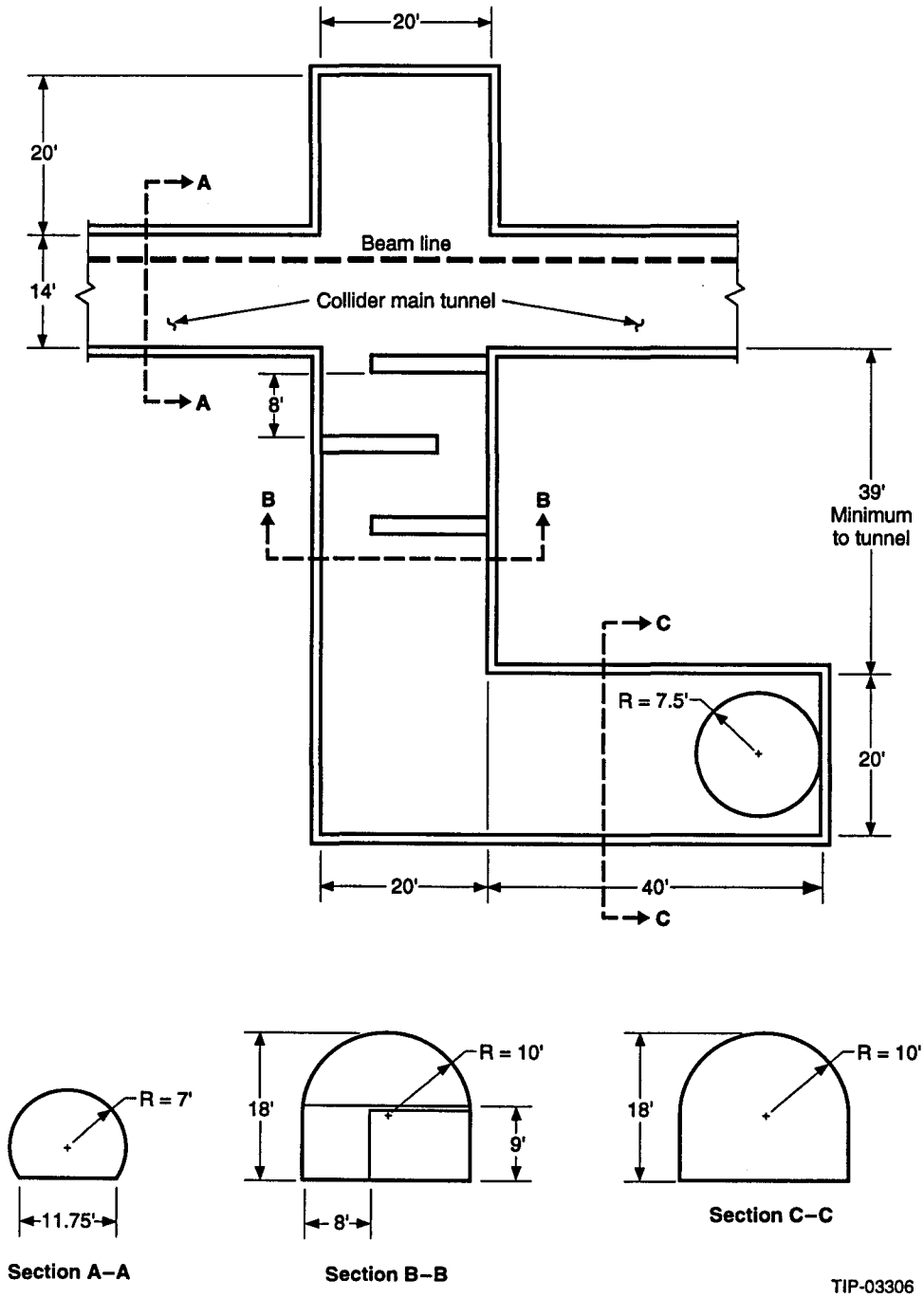

Figure 12. Ventilation Shaft Layout.

TABLE 4. DOSE D AT THE TOP OF VENTILATION SHAFTS (FIGURE 12) WITH THREE 2-FT CONCRETE SHIELDING WALLS IN THE ADIT FOR OPERATIONAL BEAM LOSS ("A", D IN MREM/YR) AND FOR CATASTROPHIC ACCIDENT ("B", D IN MREM/EVENT). SHAFT DEPTHS TO THE FLOOR AS OF JUNE 1992.

SHAFT	DEPTH (FT)	"A"	"B"
N20	167.3	0.003	0.91
N30	174.3	0.003	0.76
N40	101.8	0.028	7.38
N50	161.8	0.004	1.06
S20	211.0	0.001	0.33
S30	196.0	0.002	0.45
S40	179.3	0.003	0.67
S50	85.8	0.056	14.63

7.0 MAGNET DELIVERY SHAFTS

As found in Reference 1, the most practical shielding measure at the Collider magnet delivery shafts is a concrete cap on the top, below grade (Figure 13). The updated delivery shaft cap thicknesses, based on current study to satisfy the permissible radiation limits (see Section 3.0), are presented in Table. 5. The data are consistent with those given in Reference 1 (note different dose limit 50 mrem assumed in Figure 12 of Reference 1). Results are given for plugs made of ordinary concrete. Use of heavier concrete or a change of the straight-vision geometry to a sophisticated one (creation of a two-section labyrinth) will result in a significant reduction of the indicated thicknesses. If there is no need in some of the delivery shafts after magnet installation, one can seal them with simple solid plugs on the top below grade with no mass shielding and with a slot (Figure 13) at the lower levels. The corresponding thicknesses are 22.4 ft (N40), 18.1 ft (S25), and 19.9 ft (S40) for plugs made of ordinary concrete (2.35 g/cm^3) or correspondingly 1605, 1296, and 1425 g/cm^2 for other materials like Austin chalk, dust, sand, *etc.*

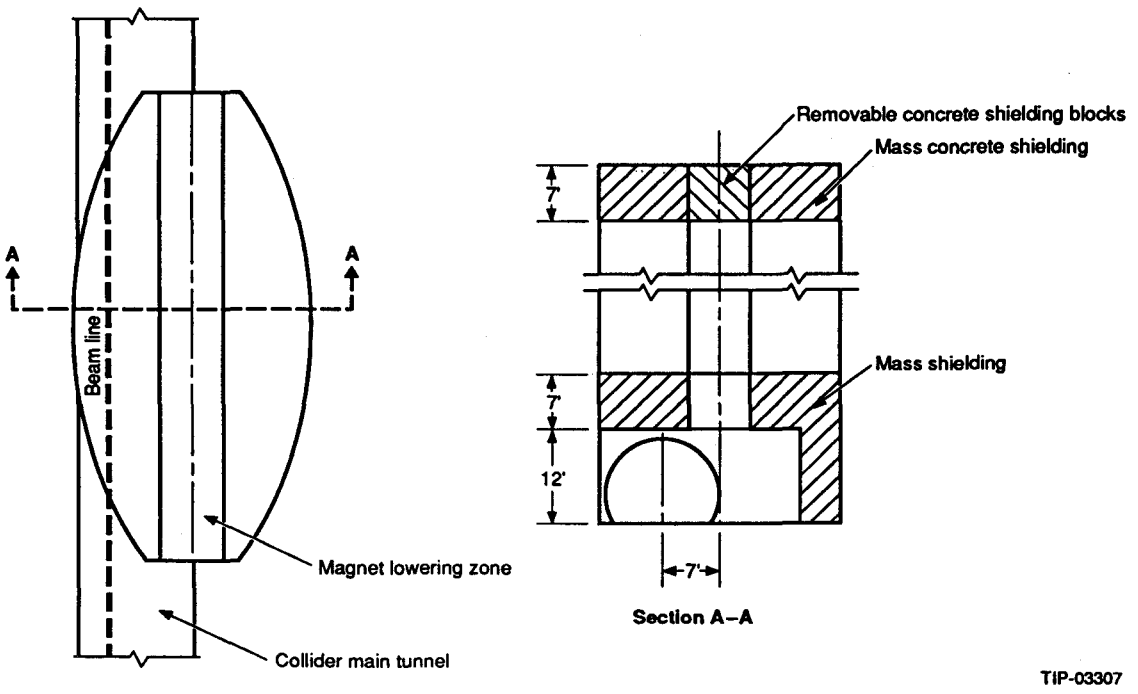

Figure 13. Magnet Delivery Shaft Schematic.

TABLE 5. THE UPDATED MAGNET DELIVERY SHAFT (FIGURE 13) CAP THICKNESSES D FOR OPERATIONAL BEAM LOSS ("A") AND FOR CATASTROPHIC ACCIDENT ("B"). SHAFT DEPTHS TO THE FLOOR AS OF JUNE 1992.

SHAFT	DEPTH (FT)	"A": D (FT)	"B": D (FT)
N15	230	5.1	8.3
N40	91	10.1	13.4
N55	165	6.7	10.0
S25	199	5.8	9.1
S40	142	7.6	10.9
S55	73	11.3	14.6

ACKNOWLEDGEMENTS

We are very grateful to Gerry Dugan, Joe Coyne, Duane Plant, and Tim Toohig for their fruitful discussions.

REFERENCES

1. I. S. Baishev, N. V. Mokhov, and T. E. Toohig, *The SSC Access Shafts Calculational Study,* SSCL-496, 1991.
2. N. V. Mokhov, Memo to T. Toohig, SSCL, November 14, 1991.
3. *Design Requirements for the Shafts and the Tunnel Finish from N25 to N40,* SSCL Document Control Number C16-00240, February 21, 1992.
4. I. S. Baishev, A. I. Drozhdin, and N. V. Mokhov, *Beam Loss and Radiation Effects in the SSC Lattice Elements,* SSCL-306,1990.
5. *Site-Specific Conceptual Design Report (SCDR) of the Superconducting Super Collider,* SSCL-SR-1056, 1990.
6. N. V. Mokhov, *Collider Arcs PDRR,* SSCL, May 1992.
7. N. V. Mokhov, *The MARS10 Code System,* FN-509, Fermilab (1989).
8. I. S. Baishev, I. A. Kurochkin, N. V. Mokhov, *Extension of the MARS 10 Code System Possibilities,* IHEP 91-118, Protvino, 1991.
9. G. R. Stevenson, CERN 76-04, Geneva, 1976.