SSCL-501

SSCL-501

Superconducting Super Collider Laboratory

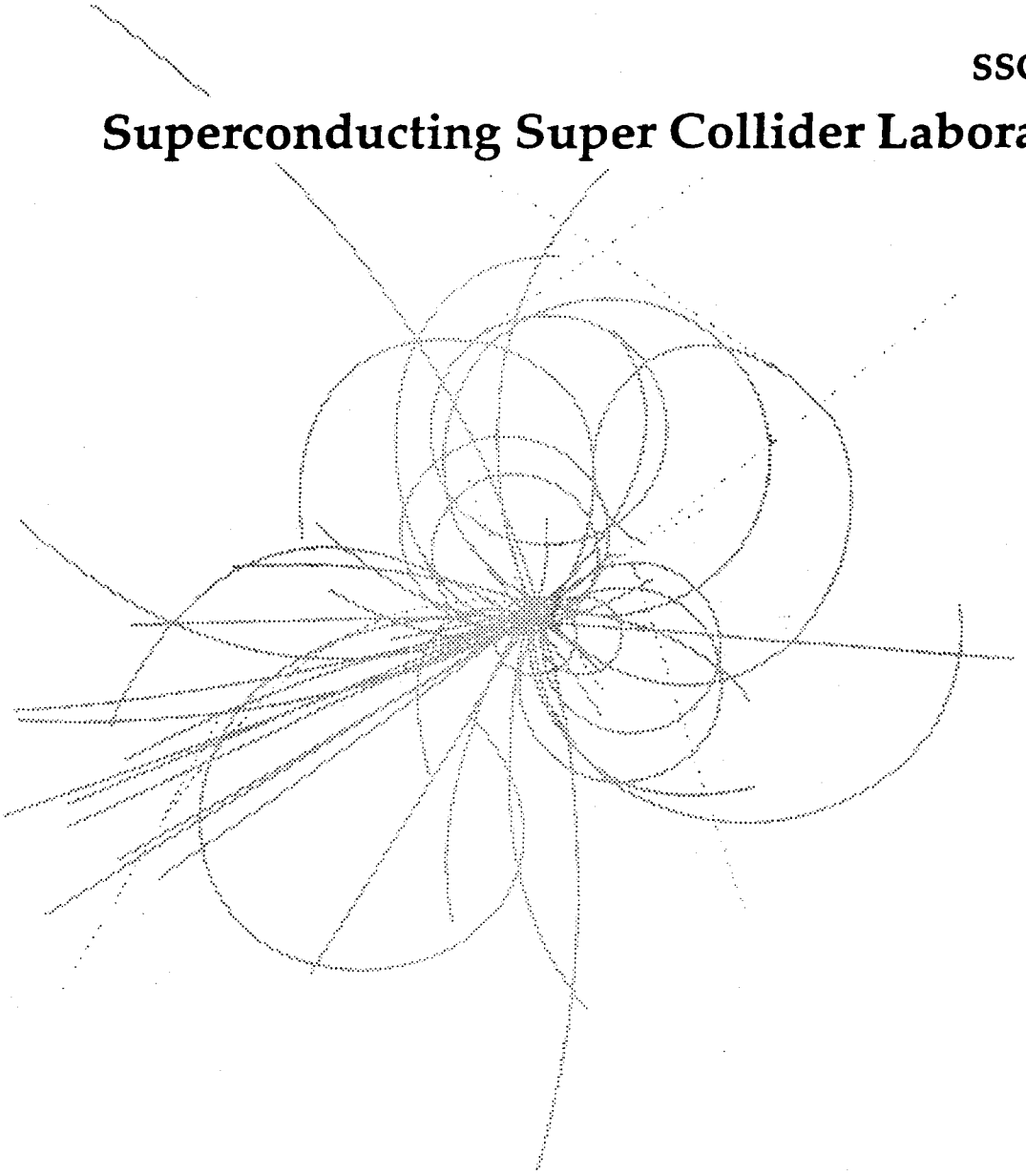

Background Information on the SSC Project

J. Warren

October 1991

SSCL-501

BACKGROUND INFORMATION ON THE SSC PROJECT

J. Warren

Superconducting Super Collider Laboratory*
2550 Beckleymeade Avenue
Dallas, Texas 75237

October 1991

* Operated by the Universities Research Association, Inc., for the U.S. Department of Energy under Contract No. DE-AC35-89R40486

CONTENTS

FIGURES iv
TABLES vi
1.0 GOALS AND MILESTONES 1
2.0 CIVIL CONSTRUCTION 1
2.1 Ring Geometry and Road System 1
2.2 Locations of Access Shafts 8
2.3 Tunnelling 8
3.0 RING COMPONENTS 19
3.1 Injection Lines from HEB 19
3.2 Collider Magnets, Spool Pieces, and Magnet Stands 20
3.3 RF Accelerator System 27
3.4 Interaction Regions and Particle Detectors 27
3.5 Beam Dumps 37
4.0 CRYOGENICS 41
5.0 VACUUM AND COOLING WATER SYSTEMS 41
6.0 ELECTRICAL POWER 44
7.0 INSTRUMENTATION AND CONTROL SYSTEMS 50
8.0 INSTALLATION PLANNING 51
8.1 Introduction 51
8.2 Installation of the first sector (E2 to E1) 51
8.3 Global Planning 52

FIGURES

2.1 Location of SSC Site. 3
2.2 SSC Footprint 4
2.3(a) Major Roads in Site Vicinity 5
2.3(b) Secondary Roads in Site Vicinity 6
2.3(c) Location of Railroads 7
2.4 Isometric of Tunnel and Shafts 9
2.5 N15 Magnet Delivery Shaft Isometric and Horizontal Cross Section 10
2.6 N15 Utility Shaft Isometric 11
2.7 Horizontal Cross Section of Utility Shaft and Gallery 12
2.8 N20 Personnel Shaft Isometric and Cross Section 13
2.9 N20 Personnel Shaft Gallery with Equipment 14
2.10 Schematic Relationship of Collider Tunnel to Site Geology and Topography 15
2.11 Array of Niches in Tunnel 16
2.12 View of Small Tunnel Niche 17
2.13 Views of Large Tunnel Niche 18
3.1 Typical Dipole Magnet Stand 21
3.2 Conceptual Arrangement of Spool Piece 22
3.3 Isolation Spool Piece (SPRI) with U-Tube Connection Box 23
3.4 Dipole Cryostat Cross Section with Cryogenic Headers 24
3.5 Arc Quadrupole Cold Mass Cross Section 25
3.6 Typical Cross Section of the Collider Tunnel 26
3.7 Schematic Indicating the Positions of the Klystrons, Waveguides and RF Cavities 28
3.8 Design of a 5-cell RF Cavity for the SSC Main Ring 29
3.9 Vertical Cross Section Through Interaction Sector Viewed from Inside the Ring 30
3.10 Interaction Regions with Diamond Bypass 31
3.11 SDC Scintillator Calorimeter Detector, Vertical Section (dimensions in Millimeters) 32
3.12 Isometric View of SDC Detector and Beam Lines. (IR quads are not shown.) 33
3.13 SDC Underground Hall 34
3.14 Placement of IR Quads Relative to the Intersection Points 35
3.15 Horizontal Section Showing Utility Bypass 36
3.16 Injector Complex, Dump Lines and Test Beam Line. Note: Test Beams come from the MEB and are not related to Collider installation 38
3.17 Collider Dump Schematic 39
3.18 Collider Beam Dump 40

5.1 Pump Cart in Tunnel 42
5.2 Typical Cooling Water Plant Located Near E-Sites 43
6.1 Possible Routing of Primary Transmission Lines 45
6.2 Possible Routing of 69-kV Line Through the Tunnel. The east and west distribution lines can be linked if one 345 kV source should fail, thereby maintaining power to the refrigerators. 46
6.3 Main Ring 69-kV Loop 47
6.4 Ring Magnet Power Supply System 48
6.5 Collider Energy Dump System for One Sector 49
7.1 BPM Module 50
8.1 Tentative Order of Magnet Installation and Crews 53

TABLES

1.1 Some Major SSC Milestones 1
2.1 Parts of the Collider Tunnel 2
2.2 Tunnel Half-Sector Turnover (Comparison to Baseline) 19
3.1 Estimated Weights and Sizes of Injection Line Magnets 20
3.2 Characteristics of Spool Pieces and Magnets 20
3.3 Characteristics of an RF Accelerator System for One Ring 27
5.1 Low Conductivity Water Needs 41
8.1 Pre-Magnet Technical Installations 51

BACKGROUND INFORMATION ON THE SSC PROJECT

1.0 GOALS AND MILESTONES

The goal of the Superconducting Super Collider (SSC) project is to be ready to begin high-energy physics experiments by the end of September 1999 (see Table 1.1). This will require the construction and commissioning of four injector accelerators and two intersecting collider accelerators. Commissioning is expected to take six months. Construction must be performed safely and with minimal environmental impact.

TABLE 1.1. SOME MAJOR SSC MILESTONES.

DESCRIPTION	DATE
Baseline Design Complete	Jul 90
A-E/CM Contract Signed	Aug 90
Supplemental Environmental Impact Statement (SEIS)	Jan 91
Start Civil Construction	Mar 91
Accelerator Systems String Test (ASST) Complete	Oct 92
BOD of first Sector of Collider Tunnel (8.7 km)	Dec 93
Full-Rate Production Decision on Magnets	Apr 94
Start Magnet installation in first Half-Sector (4.3 km)	Apr 94
Start Linear Accelerator (LINAC) Commissioning (600 MeV)	Oct 94
Start Cooldown of first Half-Sector	Mar 95
Start Low Energy Booster (LEB) Commissioning (11.1 GeV)	Oct 95
BOD of Large Experimental (Detector) Halls	Jan 96
Start Medium Energy Booster (MEB) Commissioning (200 GeV)	Jun 96
BOD of Last Half-Sector of Collider Tunnel	Jul 96
Start High Energy Booster (HEB) Installation	Aug 96
MEB Test Beam Available	Sep 96
Start HEB Commissioning (2 TeV)	Sep 98
Start West Detector Commissioning	Mar 99
Start Collider Commissioning (20 TeV on 20 TeV)	Mar 99
Beam to Experiments	Sep 99

2.0 CIVIL CONSTRUCTION

2.1 Ring Geometry and Road System

The SSC will be located in Ellis County, Texas, 30 miles south of Dallas and 40 miles southeast of Fort Worth (Figure 2.1). The collider tunnel (Figure 2.2) consists of two arcs and two nearly straight clusters. Each arc is divided into four sectors, with access shafts at each half-sector. Each cluster is divided into a utility sector and an interaction sector. The utility sector on the west side contains injection transfer lines from the High Energy Booster (HEB) and extraction lines to the beam dumps. The rf accelerating cavities are in the utility region. The interaction sectors contain the detector halls. The linear accelerator (LINAC) and Low Energy Booster (LEB) are built at the surface. The Medium Energy Booster (MEB) is approximately 30 m below ground. The HEB is about 60 m below ground and the Collider, at the E1 shaft, is about 73 m below ground. The Test Beams line rises from the MEB level to

the surface and is about 1.9 km long. The "E" and "F" nomenclature for the shafts is historical. The "N" and "S" labels will be used in defining locations in the tunnel. There are 48 half-cells in a half sector; the numbering of half-cells will be, for example, N151, N152,..., N198. The next half-sector numbering of cells starts at N201.

TABLE 2.1. PARTS OF THE COLLIDER TUNNEL

DESCRIPTION	DATA (km)
Collider	87.12
Arc	35.28
Sector(e.g. N15–N25)=1/4 Arc	8.64
Half-Sectors	4.32
Cell (24 cell = 1 half sector)	0.18
Half-Cell	0.09
Clusters	8.28
Utility Sector	4.14
Interaction Sector	4.14

A number of four-lane and two-lane highways traverse the SSC ring, including IH-35E, U.S. 77, and U.S. 287 (Figure 2.3(a)). To the east of the ring is IH-45, which links Dallas and Houston. Improvements to the secondary roads in the site vicinity are planned (Figure 2.3(b)). Figure 2.3(c) shows railroads.

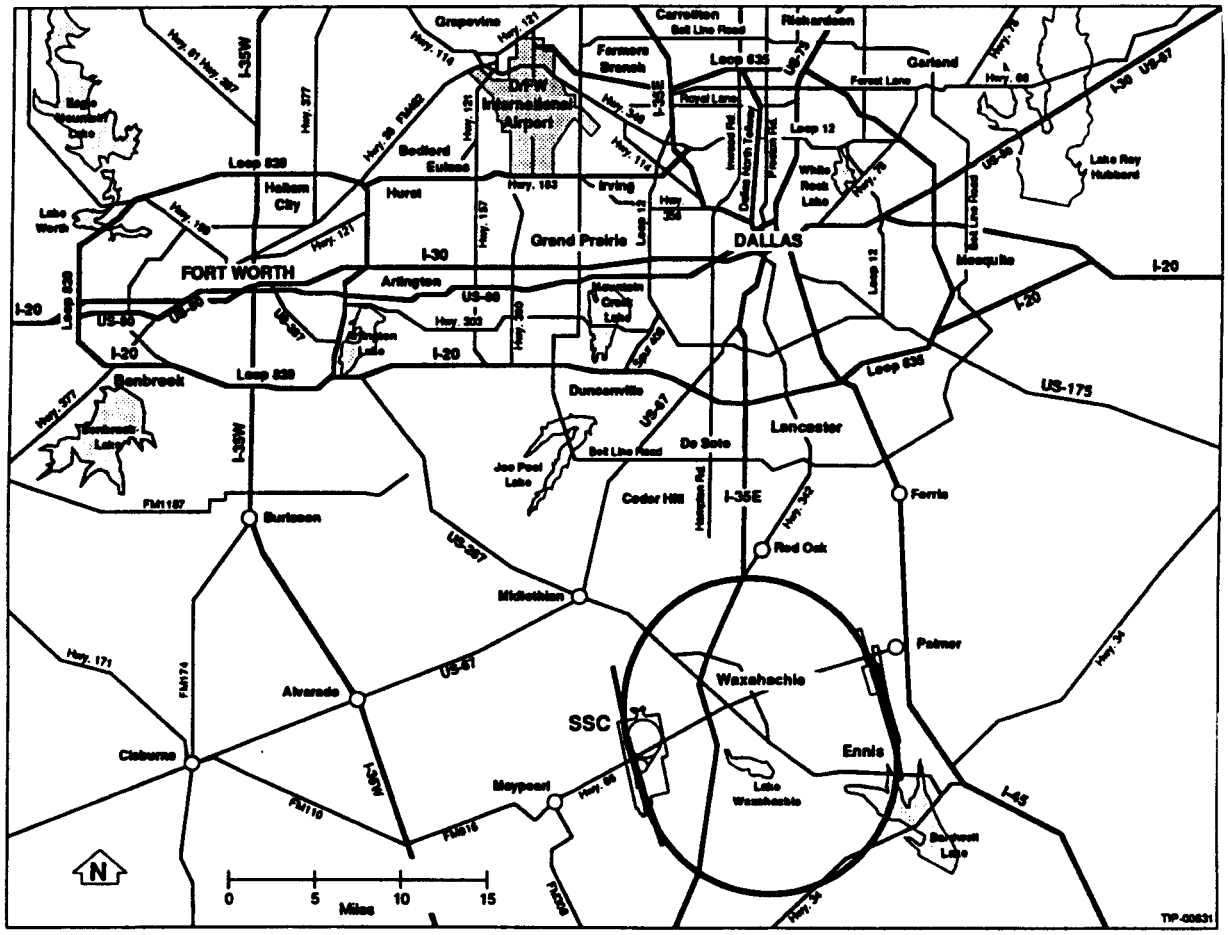

Figure 2.1. Location of SSC Site.

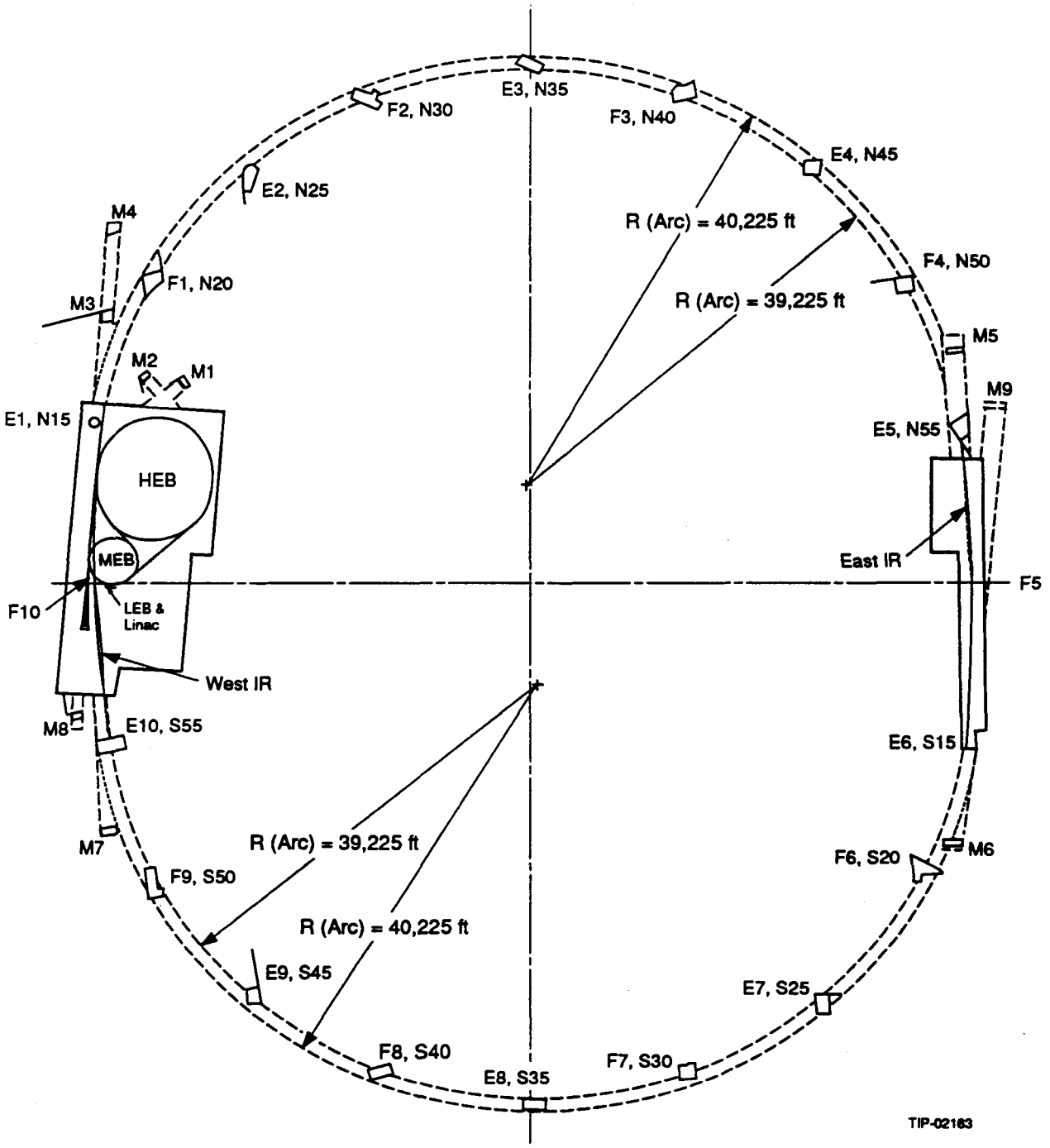

Figure 2.2. SSC Footprint.

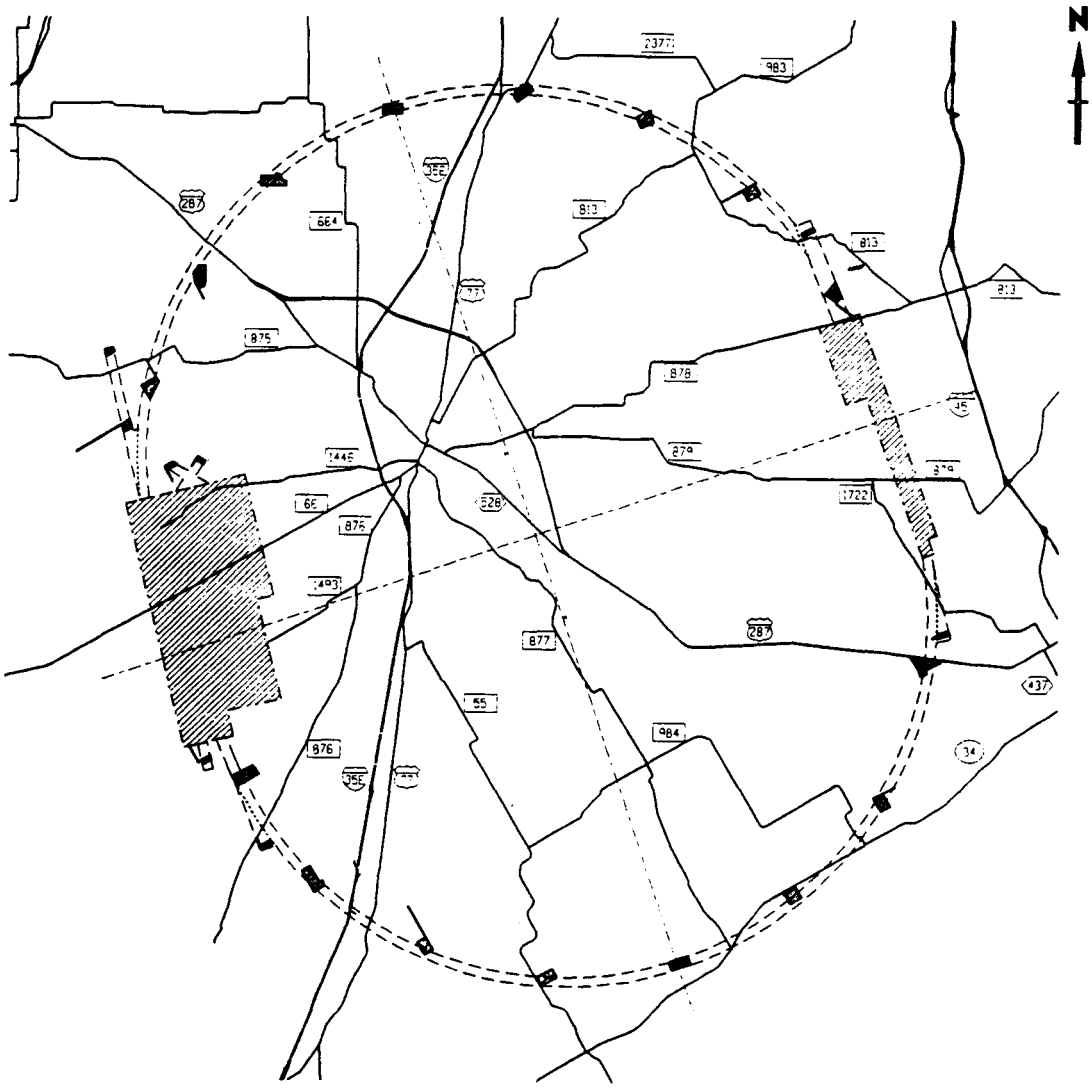

Figure 2.3(a). Major Roads in Site Vicinity.

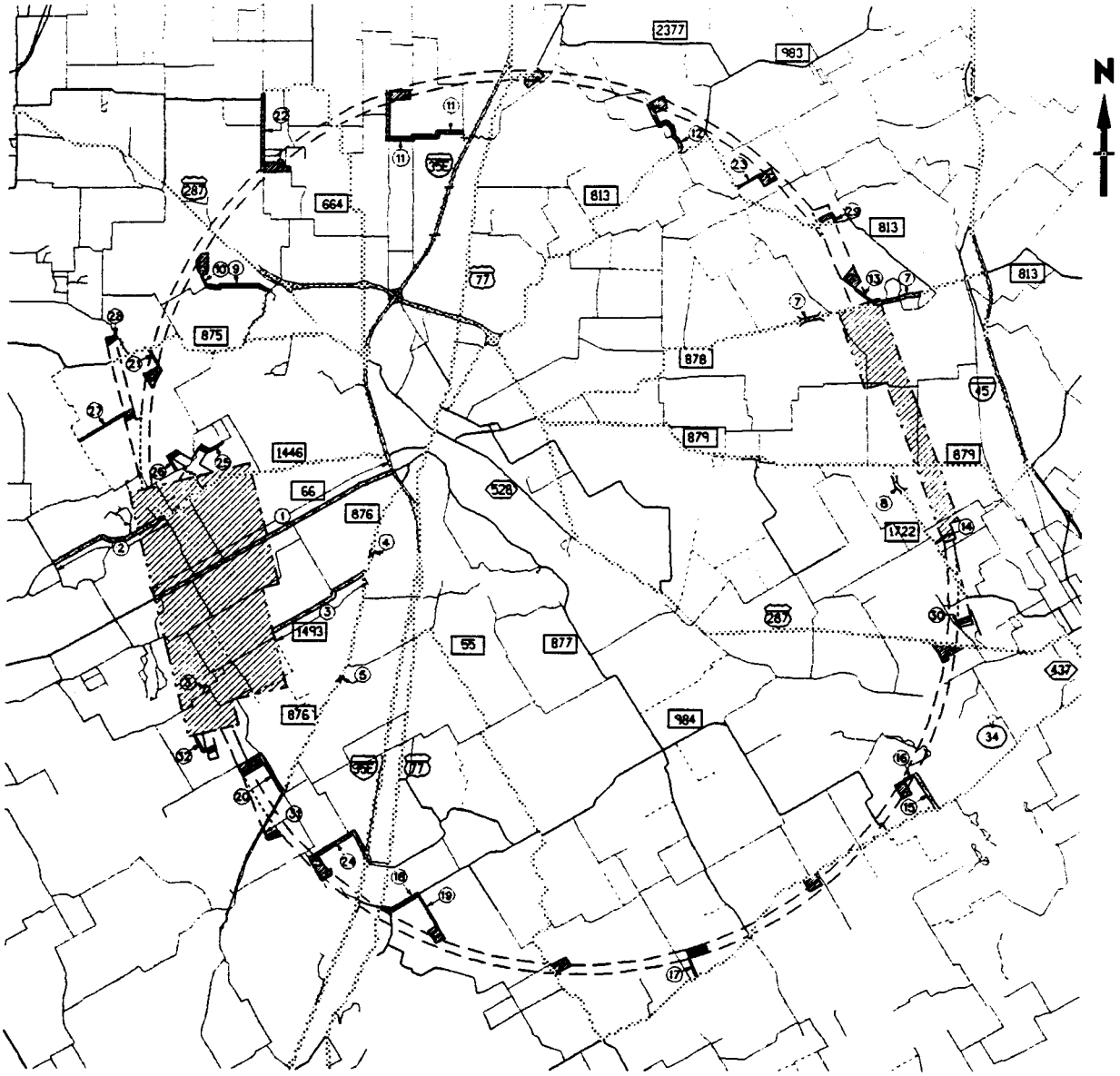

Figure 2.3(b). Secondary Roads in Site Vicinity.

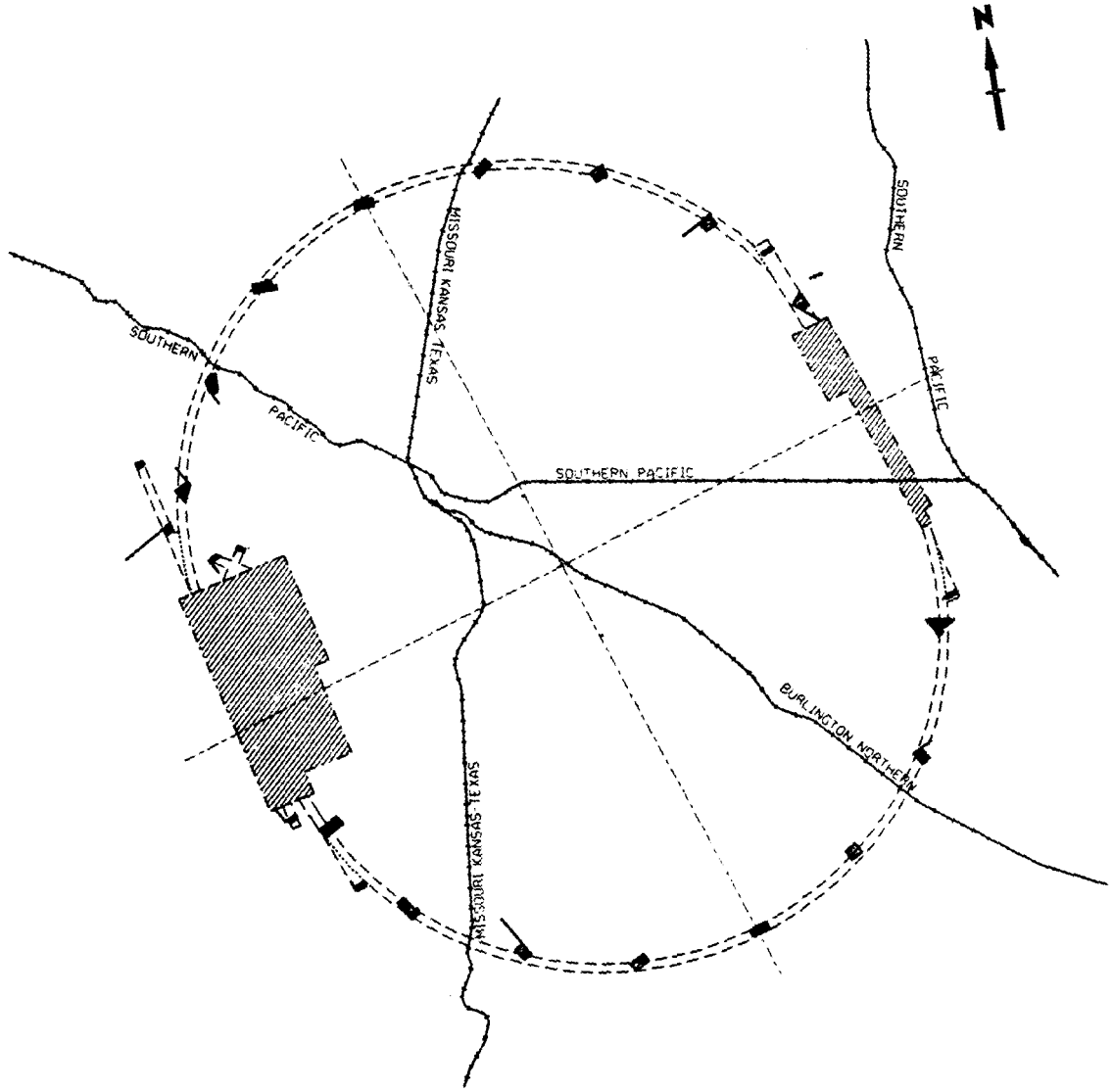

Figure 2.3(c). Location of Railroads.

2.2 Location of Access Shafts

The ring is punctuated by four types of shafts: magnet delivery shafts, utility shafts, ventilation shafts and personnel shafts (Figure 2.4). The utility shafts are at E-site locations, and ventilation shafts are at F-site locations. Each of the five magnet delivery shafts is roughly 15 m long. Dipole magnets will be lowered in the horizontal position. The shaft is oval for structural strength.

The N15 site, the first to be developed, will have three types of shafts. Figures 2.5 through 2.9 are preliminary drawings for some typical shafts. At the base of each shaft are galleries containing various conventional and technical systems.

Shafts will be constructed before the Tunnel Boring Machines (TBMs) reach the shaft location. During tunneling, shafts will be used to remove muck. As each half-sector is finished, the associated shaft will also be finished and conventional utilities installed. Personnel shafts will be unusable for bringing large pieces of equipment into the tunnel after the elevator and stairway are installed. The E-sites are the locations of the 10 large cryogenic plants; hence, the utility shafts have the liquid He and liquid nitrogen distribution piping. After utilities are installed, these shafts will have a drop zone of approximately 4 m in diameter for lowering equipment into the tunnel. Care must be taken not to bump the utilities on the walls of the shaft.

2.3 Tunnelling

The tunnel diameter will be 4.23 m after the tunnel surface is finished. The tunnel will be excavated in three formations (Figure 2.10): Austin chalk (54%), Taylor marl (34%), and Eagle Ford shale (12%).

The tunnel is more or less parallel to the surface, which is canted downward to the southeast. After tunneling, niches will be excavated every 540 m (Figure 2.11). The small niches (Figure 2.12) will contain electronic equipment racks, front-end control computers, etc. The large niches (Figure 2.13) will contain in addition large transformers and switch gear for the magnet-current supplies.

The large niches will also be "safe havens" in case of fire. Bottled air will supply seven people for two hours. The electrical equipment is protected from beam radiation by stationary shielding at the entrance to each niche.

Half sectors and shafts are available for technical installation on the dates shown in Table 2.2. This schedule is subject to change.

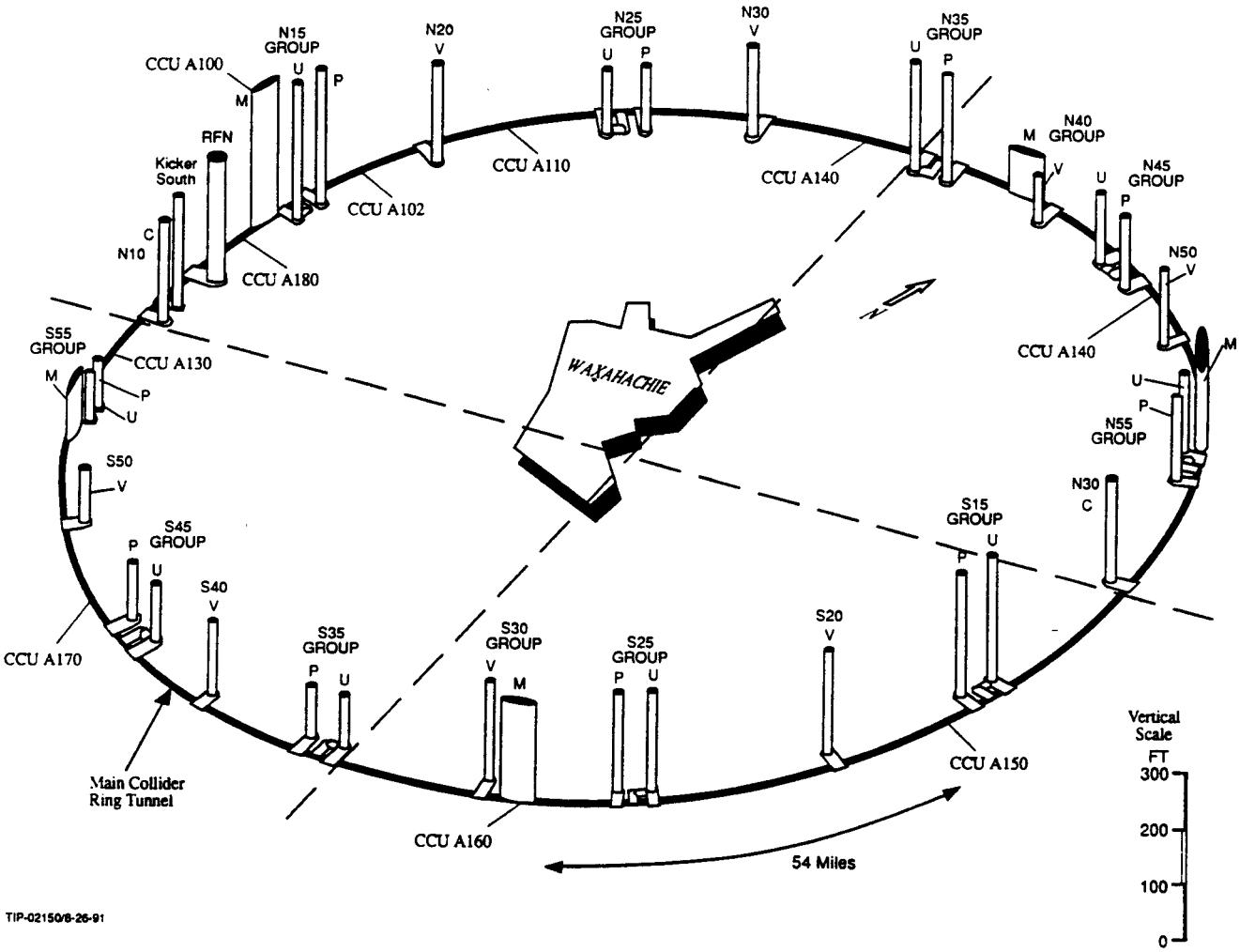

Figure 2.4. Isometric of Tunnel and Shafts.

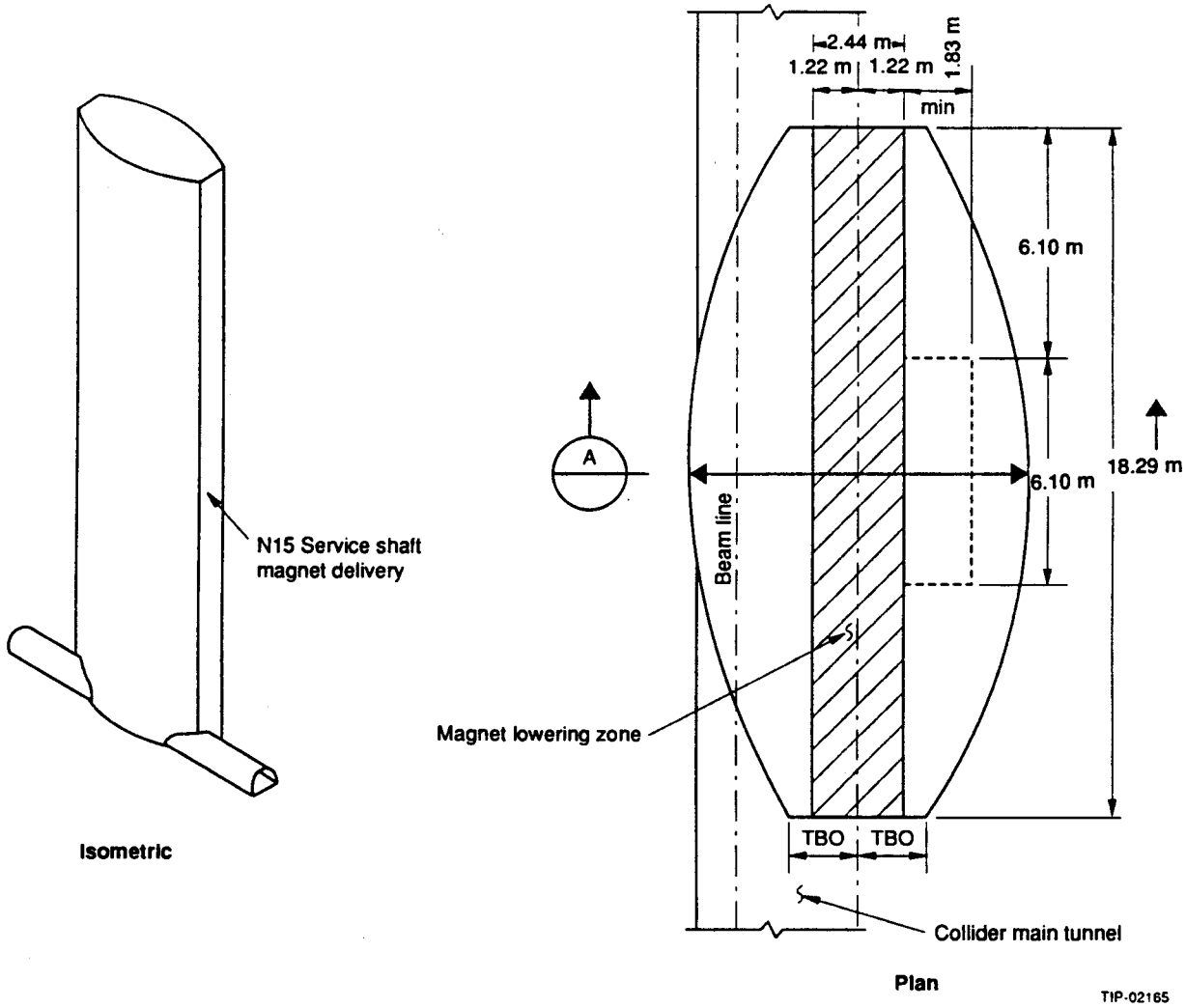

Figure 2.5. N15 Magnet Delivery Shaft Isometric and Horizontal Cross Section.

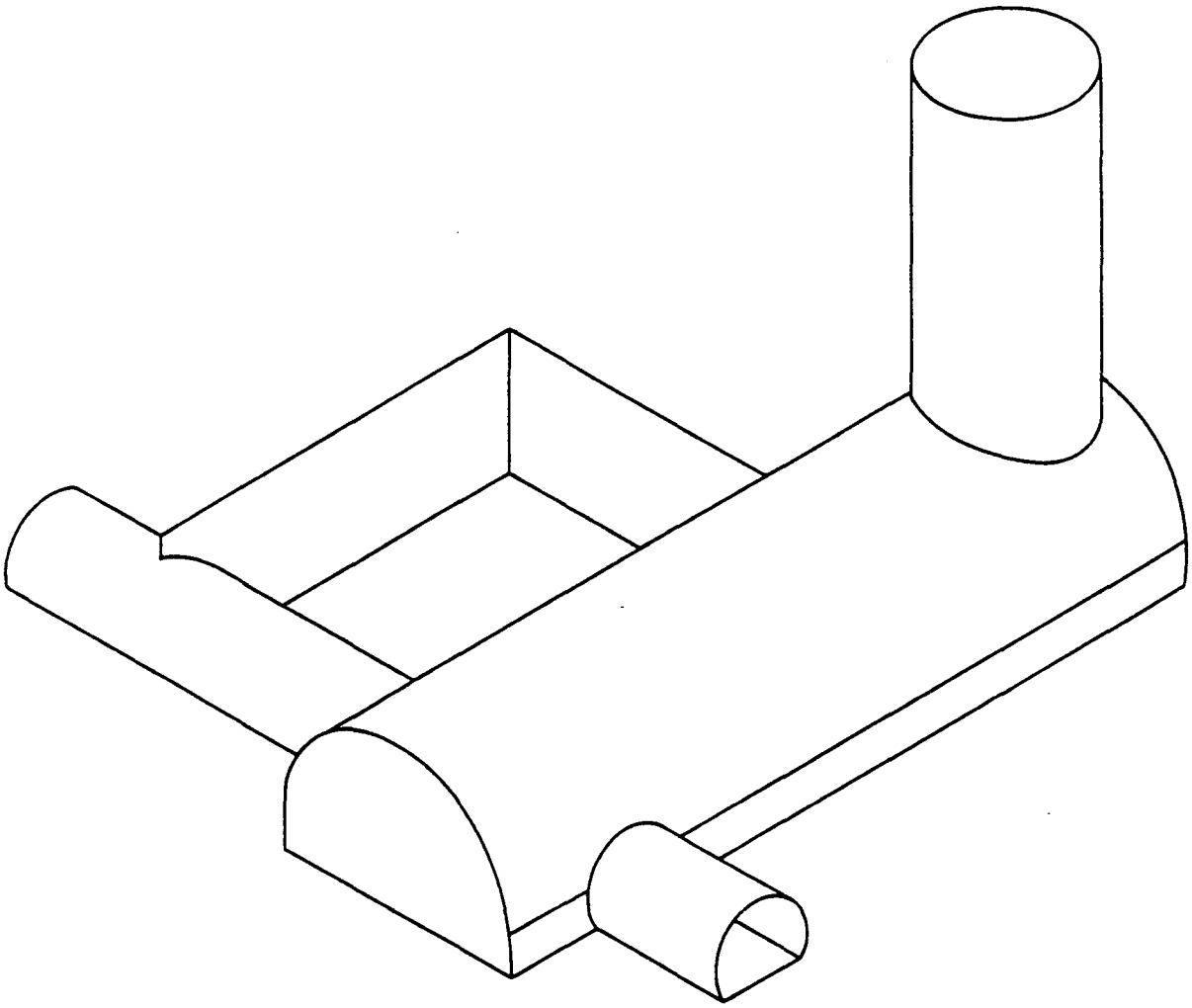

Figure 2.6. N15 Utility Shaft Isometric.

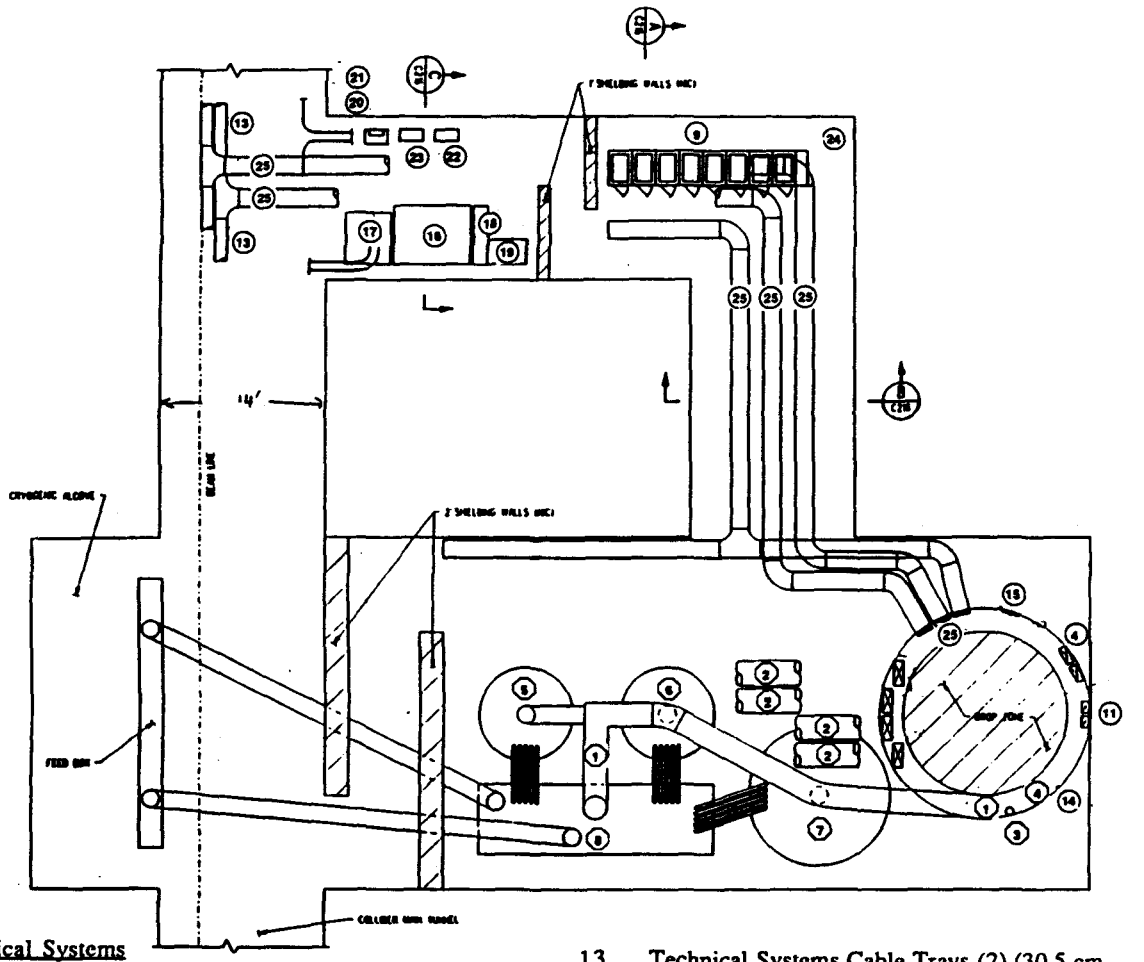

○ Technical Systems

1. Cryogenic Transfer Line (61.0 cm dia.)
2. High Current Buss Duct (4) (63.5 cm W x 25.4 cm D)
3. Helium Gas Return Line (20.3 cm dia.)
4. Nitrogen Gas Line (5.1 cm dia.)
5. Helium Subcooler and Pump Box (2.44 m D x 3.66 m H, 1816–4540 kg)
6. Liquid Nitrogen Subcooler and Pump Box (2.44 m D x 3.66 m H, 1816–4540 kg)
7. Cold Compressor (3.66 m D x 3.66 m H, 1816–4540 kg)
8. Distribution Valve Box (6.09 m W x 1.83 m D x 3.66 m H, 1816–4540 kg)
9. Relay Racks (8) (61.0 cm W x 91.4 cm D x 2.29 m H, 454 kg full)

○ Conventional Systems

10. 69 kV Circuit in Enclosed Cable Trays (2) (45.7 cm W x 20.3 cm D)
11. 12.47 kV Circuit in Enclosed Cable Trays (2) (30.5 cm W x 20.3 cm D)
12. 480 V Circuits in Conduit (2) (5.1 cm dia.)
13. Technical Systems Cable Trays (2) (30.5 cm W x 10.2 cm D) (includes Correction Element PS)
14. Sump Discharge Line (7.6 cm dia.)
15. Fiber Optic Conduits (3) (10.2 cm dia.)
16. 12.47 kV/480 V Dry Transformer 750 kVA (1.98 m W ¥ 1.52 m D ¥ 2.29 m H, 2270 kg)
17. Switchgear (1.17 m W x 1.35 m D x 2.29 m H, 454 kg)
18. Transition Section (38.1 cm W x 1.52 m D x 2.29 m H, 45.4 kg)
19. Panel (1.02 m W x 63.5 cm D x 2.29 m H, 454 kg)
20. 480 V/208 V/120 V, 50 or 75 kVA Dry Transformer (58.4 cm W x 38.1 cm D x 61.0 cm H, 145.3 kg)
21. Panel (35.6 cm W x15.2 cm D x 66.0 cm H, 45.4 kg)
22. Transfer Switch (61.0 cm W x 30.5 cm D x 91.4 cm H, 181.6 kg)
23. Emergency Panel (61.0 cm W x 30.5 cm D x 91.4 cm H, 181.6 kg)
24. Pullbox/Splicebox for Fiber Optics (91.4 cm W x 30.5 cm D x 2.29 m H, 90.8 kg, full)
25. Technical Systems Cable Trays (2) (45.7 cm W x 10.2 cm D)

Figure 2.7. Horizontal Cross Section of Utility Shaft and Gallery.

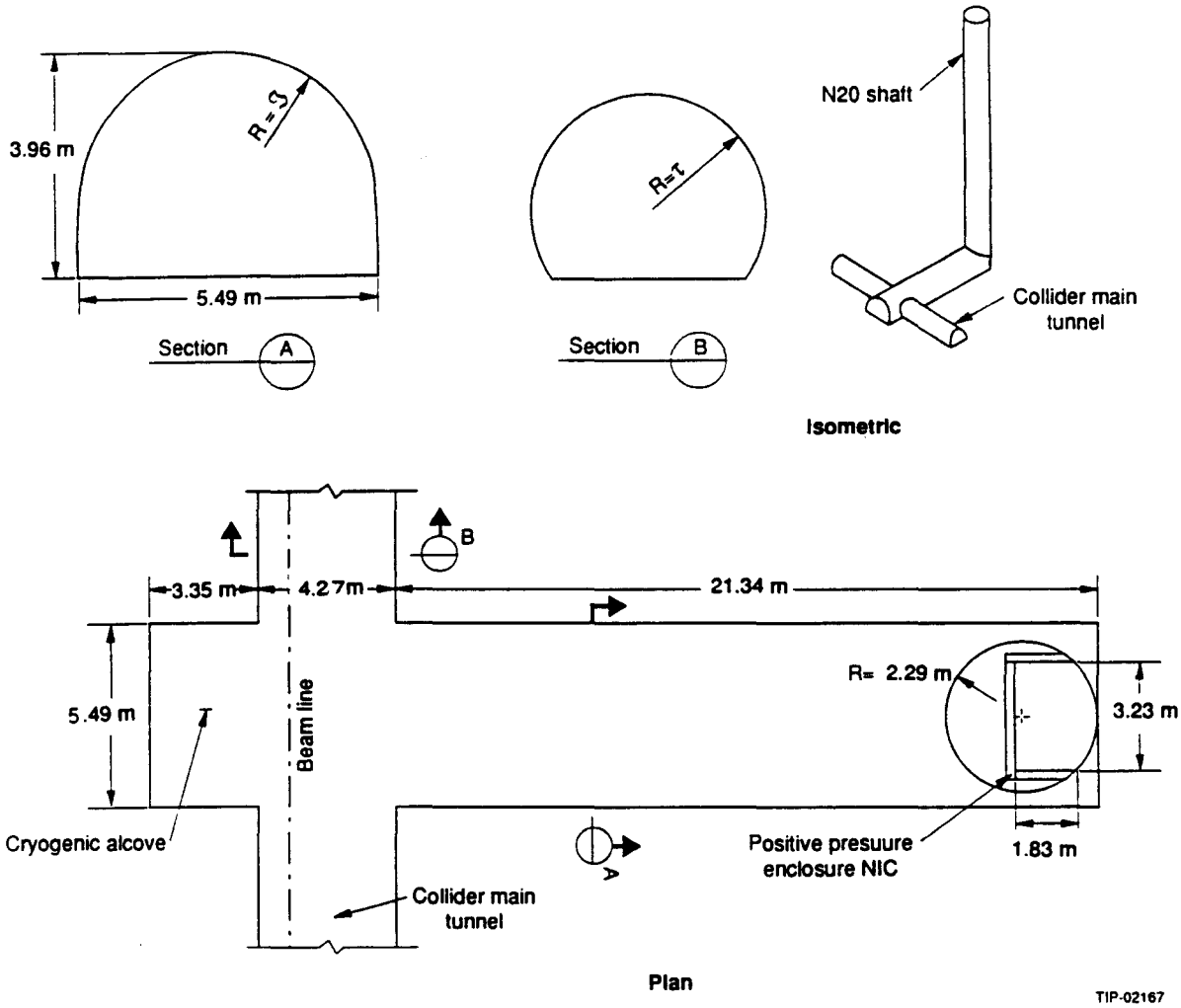

Figure 2.8. N20 Personnel Shaft Isometric and Cross Section.

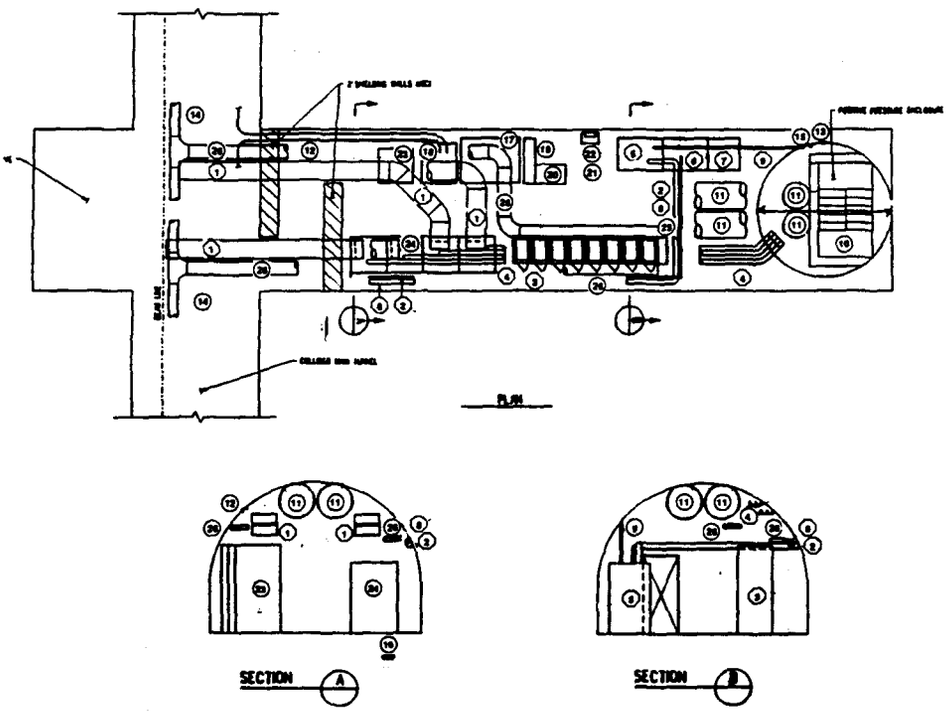

Technical Systems

1. High Current Buss Duct (4) (63.5 cm W x 25.4 cm D)
2. LCW Return Line (15.2 cm dia.)
3. Relay Racks (8) (61 cm W x 91.4 cm D x 2.29 m H, 45.4 kg empty)
4. Dump Resistor Cable Tray (4) (10.2 cm x15.2 cm)
5. LCW Tank (1.52 m W x 1.07 m D x 1.83 m H)
6. LCW Chiller (1.52 m W x 1.07 m D x 1.83 m H)
7. LCW Resin Bottles and Pump (1.07 m W x 1.07 m D x 1.83 m H)
8. LCW Supply Line (5.1 cm dia.)
9. LCW Make Up Line (5.1 cm dia.)

Conventional Systems

10. Stairway (27.9 cm T and 17.8 cm R)
11. Ventilation Ducts (91.4 cm dia.)
12. 12.47 kV Circuits (2)
13. 480 V Circuits in Conduit (2) (5.1 cm dia.)
14. Technical Systems Cable Trays (2) (30.5 cm W x 10.2 cm D)
15. Sump Discharge Line (7.6 cm dia.)
16. Fiber Optic Conduits (3) (10.2 cm dia.)
17. 12.47 kV/480 V Dry Transformer 500 kVA (1.98 m W x 1.52 m D x 2.28 m H, 2,270 kg)
18. Switchgear (1.17 m W x 1.35 m D x 2.29 m H, 454 kg)
19. Transition Section (38.1 cm W x 1.52 m D x 2.29 m H, 45.4 kg)
20. Panel (1.02 m W x 63.5 cm D x 2.29 m H, 454 kg)
21. 480 V/208 V/120 V, 50 or 75 kVA Dry Transformer (58.4 cm W x 38.1 cm D x 61.0 cm H, 145.3 kg)
22. Panel (35.6 cm W x 15.2 cm D x 66.0 cm H, 45.4 kg)
23. Motorized Switch (1.17 m W x 1.17 m D x 2.29 m H, 681 kg)
24. Energy Dump Switches (4) (1.22 m W x 1.22 m D x 1.83 m H, 227 kg)
25. Pullbox/Splicebox for Fiber Optics (91.4 cm W x 30.5 cm D x 2.29 m H, 90.8 kg full)
26. Technical Systems Cable Trays (2) (45.7 cm W x 10.2 cm D)

Figure 2.9. N20 Personnel Shaft Gallery with Equipment.

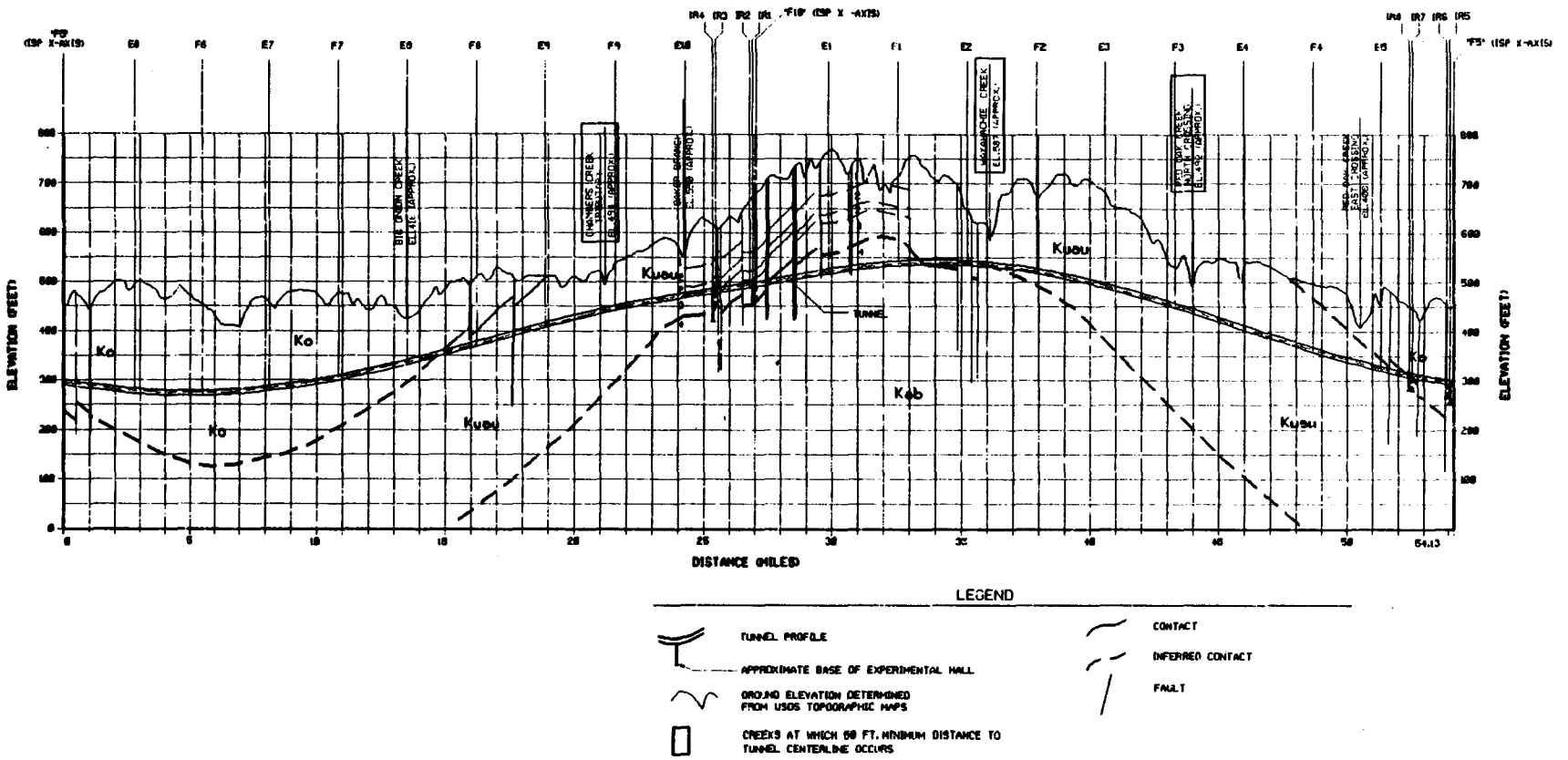

Figure 2.10. Schematic Relationship of Collider Tunnel to Site Geology and Topography.

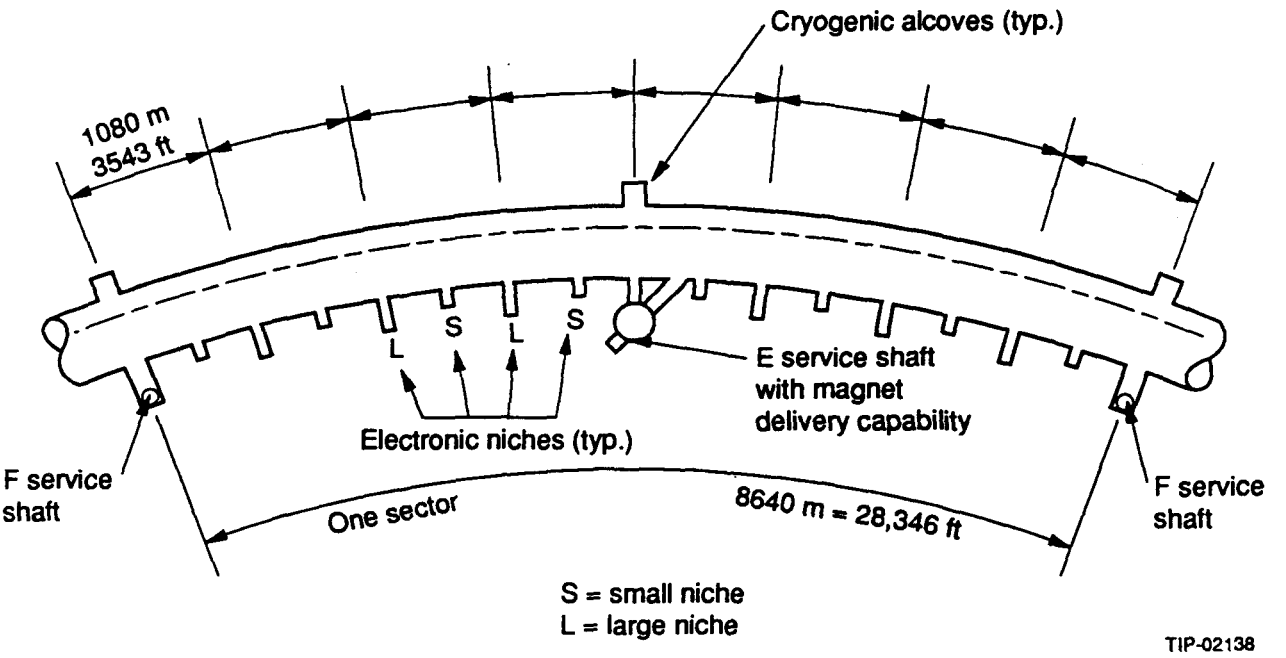

Figure 2.11. Array of Niches in Tunnel.

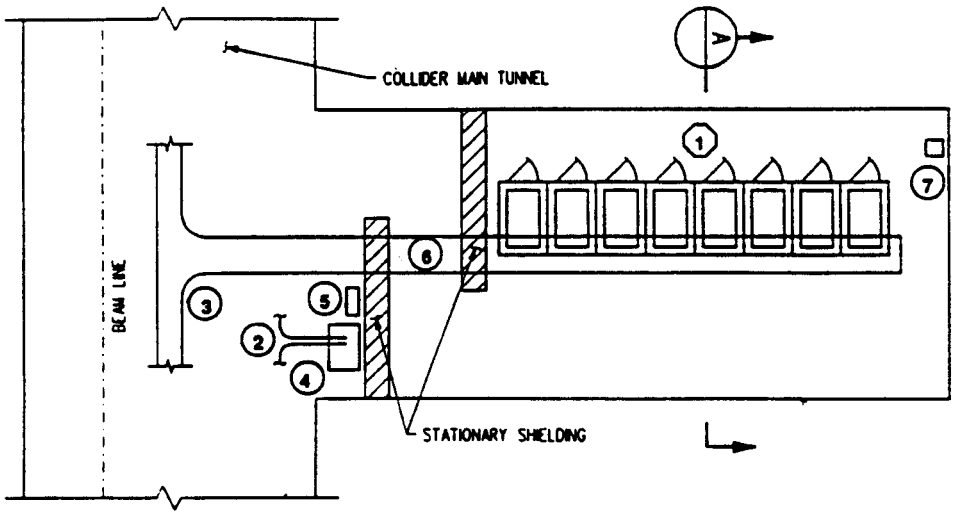

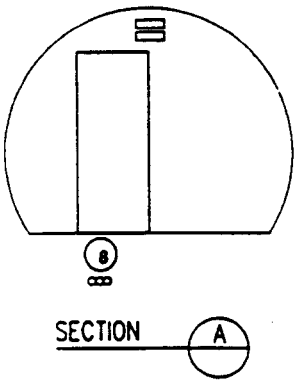

LEGEND

Technical Systems

1. Relay Racks (8)

Conventional Systems

2. 480V Supplies Tunnel Lighting, Welding Outlets, Magnet Heaters, and Small Niche Power - In Conduits (4) - 0.0508 m D.
3. Technical Systems Cable Tray (2) (0.3048 m W x 0.1016 m D)
4. 480 V/208V/120V-Dry Transformer –1.912m W x 1.524 m D x 2.286m H –2267.96 kg
5. Panel -0.3556 m W x 0.1524 m D x-.6604m H –45.392 kg
6. Technical Systems Cable Tray (2) 0.4572m W x 0.1016m D
7. Pullbox for Fiber Optics
8. Fiber Optic Conduits (3) (10.2 cm dia.)

Figure 2.12. View of Small Tunnel Niche.

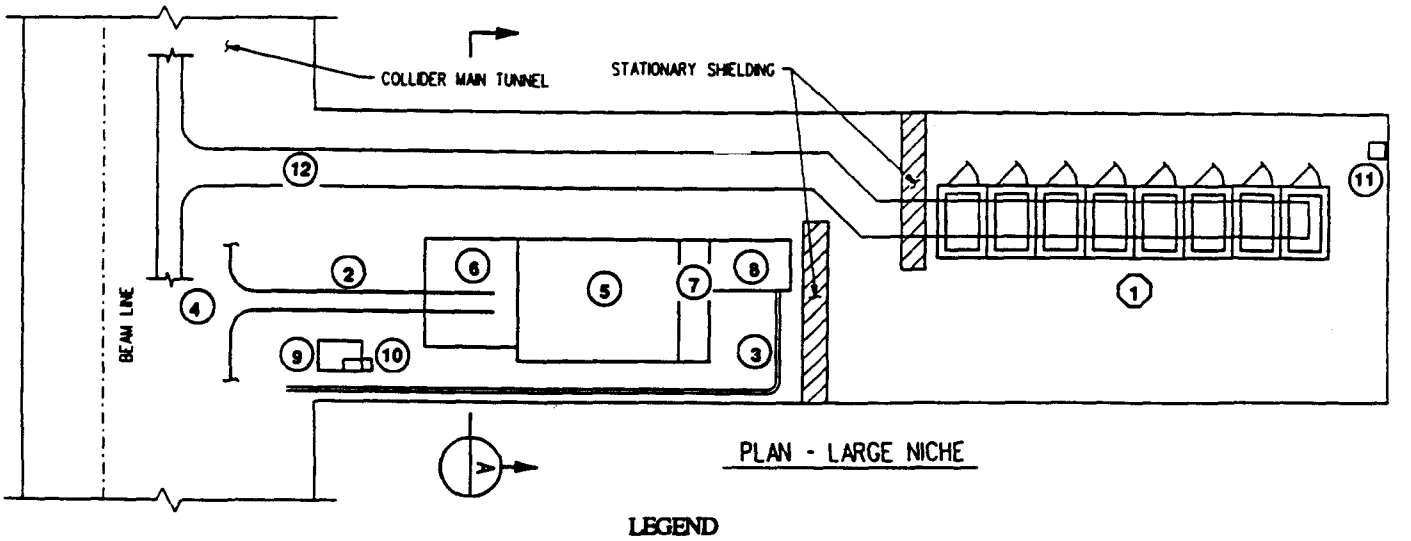

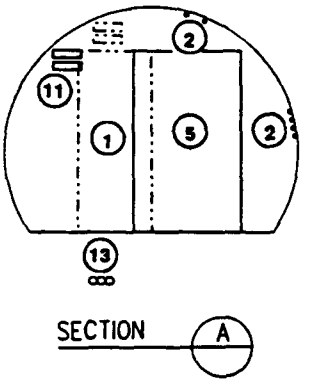

LEGEND

Technical Systems

1. Relay Racks (8) (61.0 cm W x 91.4 cm D x 2.29m H 454 kg) (Full)

Conventional Systems

2. 12.47 kV Circuits
3. 480V Supplies Tunnel Lighting, Welding Outlets, Magnet Heaters, and Small Niche Power - In conduits (4) (5.1 cm) D.
4. Technical Systems Cable Trays (2) (45.7 cm W x 10.2 cm D.)
5. 12.47 kV/480V - Dry Transformer - (500 kVA - 1.98m W x 1.52m D x 2.29m H -2270 kg)
6. Switchgear (1.17m W x 1.35m D x 2.29m H , -454 kg)
7. TransitionSection (38.1cm W x 11.52m D x 2.29m H, 45.5 kg)
8. Panel (-1.02m W x 63.5 cm D x 2.29m H, 454 kg)
9. 408V/208V/120V. Dry Transformer (58.4 cm W x 38.1 cm D x 61.0 cm H, 145.3 kg)
10. Panel (35.6 cm w x 15.2 cm DX 66.0 cm H, 45.4 kg)
11. Pullbox for Fiber Optics
12. Tehnical System Cable Trays(2) (45.7 cm W x 10.2 cm D)
13. Fiber Optics Conduits (3) -0.1016m

Figure 2.13. Views of Large Tunnel Niche.

TABLE 2.2. TUNNEL HALF-SECTOR TURNOVER (COMPARISON TO BASELINE).

1/2 SECTOR		PB/MK 91 MAY 09	SSC B/L VERSION 12/REVISION 6
1.	F2–E3	Sep 93	Apr 94
2.	E1–F1	Dec 93	Nov 93
3.	F1–E2	Dec 93	Jan 94
4.	E3–F3	Mar 94	Oct 95
5.	E2–F2	May 94	Jan 94
6.	F3–E4	Aug 94	Apr 95
7.	F8–E9	Aug 94	May 96
8.	E9–F9	Dec 94	Jul 96
9.	E7–F6	Mar 95	Feb 96
10.	F6–E6	Sep 95	Sep 96
11.	E7–F7	Sep 95	Jun 94
12.	F10–E1	Nov 95	Feb 96
13.	F7–E8	Mar 96	Mar 95
14.	E6–F5	Feb 96	May 96
15.	F5–E5	Jun 96	Apr 97
16.	F9–E10	Jun 96	Sep 96
17.	E8–F8	Aug 96	Mar 95
18.	E4–F4	Aug 96	Feb 95
19.	F4–E5	Dec 96	Oct 94
20.	E10–F10	Dec 96	Oct 94
MAGNET SHAFTS		AVAILABLE FOR INSTALLATION	
E1		22 Oct 92	
F3		8 Aug 94	
F8		25 Aug 94	
E7		30 Sep 95	
E10		1 Jul 96	
E5		1 Jul 96	

3.0 RING COMPONENTS

3.1 Injection Lines from HEB

The HEB operates in both clockwise and counterclockwise modes to fill the lower and upper collider rings. Hence, there are two injection tunnels leading from the HEB to the Collider tunnel. These tunnels are approximately 629 m long and contain approximately 48 magnets: non-superconducting septums, C-magnets, dipoles, and quadrupoles (Table 3.1). The collider tunnel is roughly 13 m below the HEB tunnel.

TABLE 3.1. ESTIMATED WEIGHTS AND SIZES OF INJECTION LINE MAGNETS.

NAME	NUMBER	LENGTH (m)	DIAMETER (m)	WEIGHT (kg)	CURRENT (A)
Septum	7	5.04	0.6	11,500	5582
C-Magnets	5	4.93	0.5	8680	5582
Quadrupoles	13	1.75	0.6	4500	3500
Dipoles	16	6.00	0.6	14,000	5000
Kickers	8	0.40	0.3	300	4090

3.2 Collider Magnets, Spool Pieces, and Magnet Stands

A typical half-cell (90 m) will contain one quadrupole magnet, one spool piece, and five dipole magnets. Some half-cells will lack one dipole. The magnets and their cryostats are considered as one piece. The dimensions in Table 3.2 are for the typical cryostat/magnet unit. Some dipoles are shorter and some spool pieces are longer.

TABLE 3.2. CHARACTERISTICS OF SPOOL PIECES AND MAGNETS.

NAME	NUMBER	LENGTH (m)	DIAMETER (m)	WEIGHT (kg)	CURRENT (A)
Dipole	8652	15.915	0.33	12,700	6600
Quadrupole	1992	5.850	0.33	3105	6600
Spool Piece	1992	4.575	0.50?	1800	6600
Magnet Stand	10,644	~12.0	hgt = 1.2	270	0
Empty Cryostat	104	15.915	0.33	1524	0

One-half of a typical dipole magnet stand is shown in Figure 3.1. One stand holds magnets for both the upper and lower rings. It consists of 2 C-shaped frames connected by struts.

The spool piece, so named because it is an empty place in the string of magnets that make up the ring, contains magnetic correction elements, beam position monitors (BPMs), entry/exit electrical leads for the corrector magnets, quench protection heaters, cryogenic components, and vacuum system components. There are five different types of spool pieces: SPA, SPR, SPRI, SPRF and SPRE. Figures 3.2 and 3.3 provide cut-away views of two typical spools.

A cell (180 m) contains one SPA and one SPR. The SPR is similar to an SPA but it also contains a recooler that takes a small portion of the flowing liquid helium and expands it into a pool-boiling chamber, thereby withdrawing heat from the main flow. Every six cells (1.08 km) there is an isolation spool with a recooler (SPRI). At the SPRI the flow is directed upward into a box containing inverted U-shaped tubes. These tubes are removable to isolate magnet sections that need to be repaired, and they provide service locations for instrumentation and valving. At the end of a half-sector (4.32 km) there is an SPRE spool that is similar to the SPRI. It has a U-tube box that allows return of fluids still inside the main cryostats to the refrigerator. The SPRF is where the cryogens enter the magnet string from the cryoplant.

The cross sections of the dipole and quadrupole magnets are shown in Figures 3.4 and 3.5. A typical cross section of the magnets installed in the tunnel is shown in Figure 3.6.

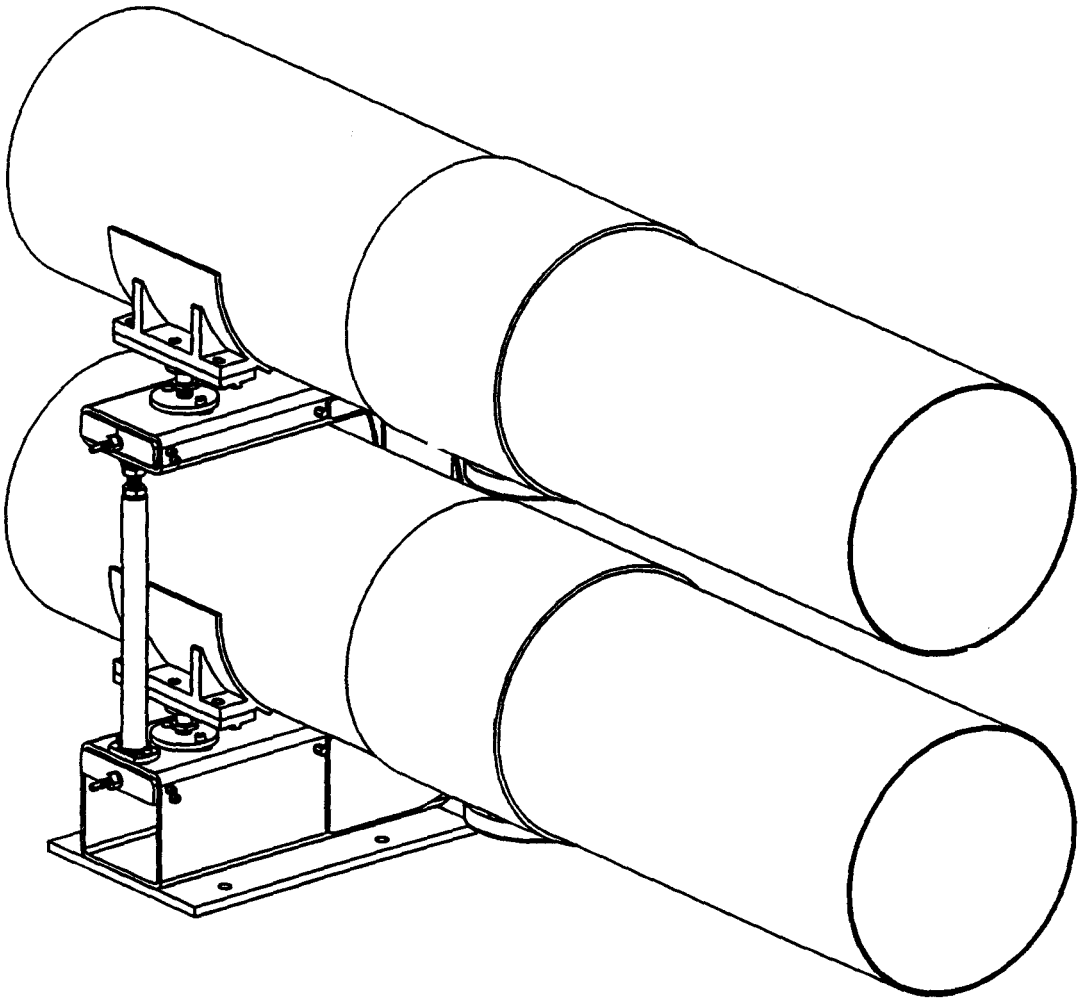

Figure 3.1. Typical Dipole Magnet Stand.

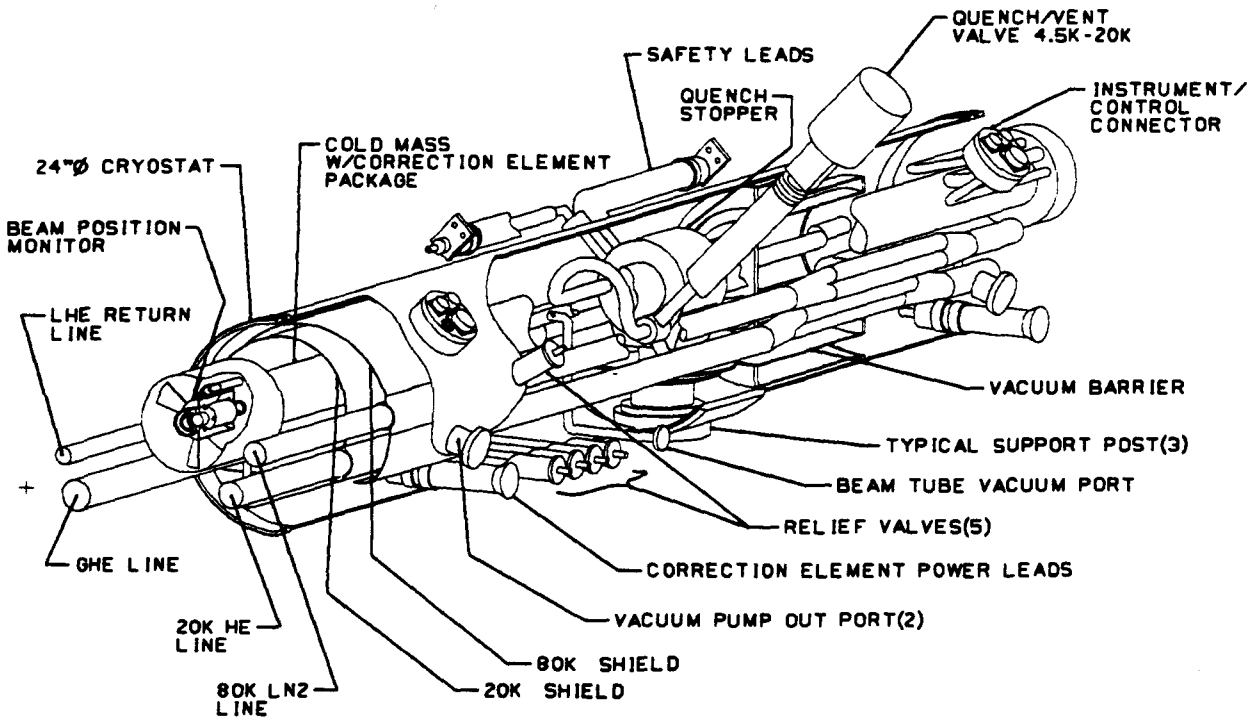

Figure 3.2. Conceptual Arrangement of Spool Piece.

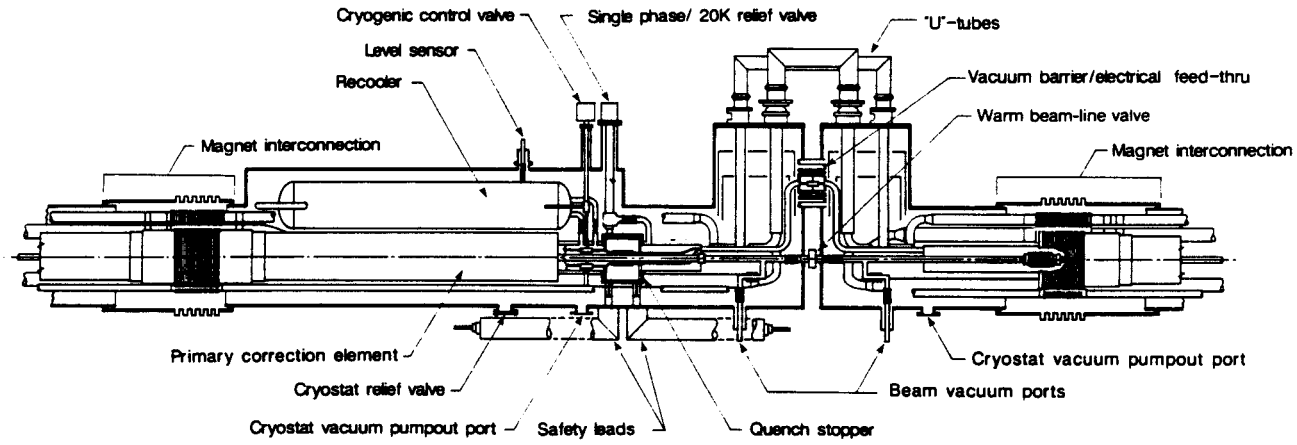

Figure 3.3. Isolation Spool Piece (SPRI) with U-Tube Connection Box.

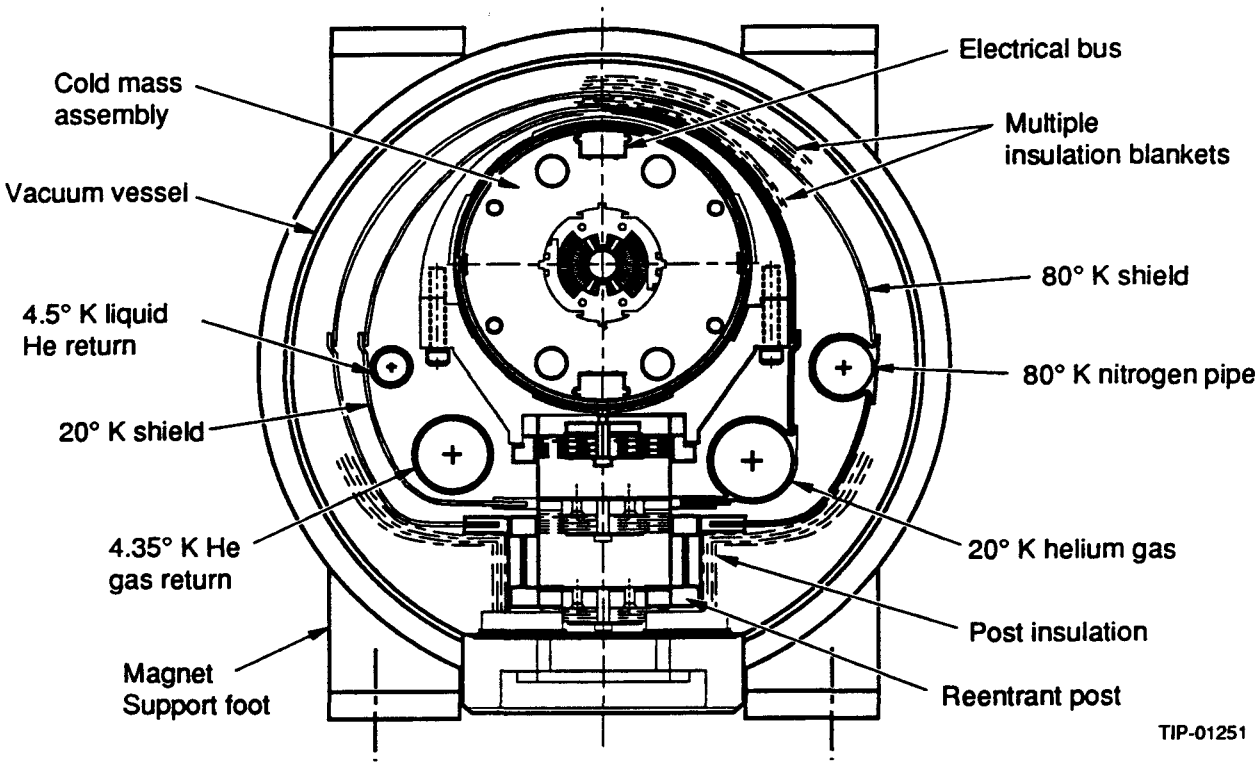

Figure 3.4. Dipole Cryostat Cross Section with Cryogenic Headers.

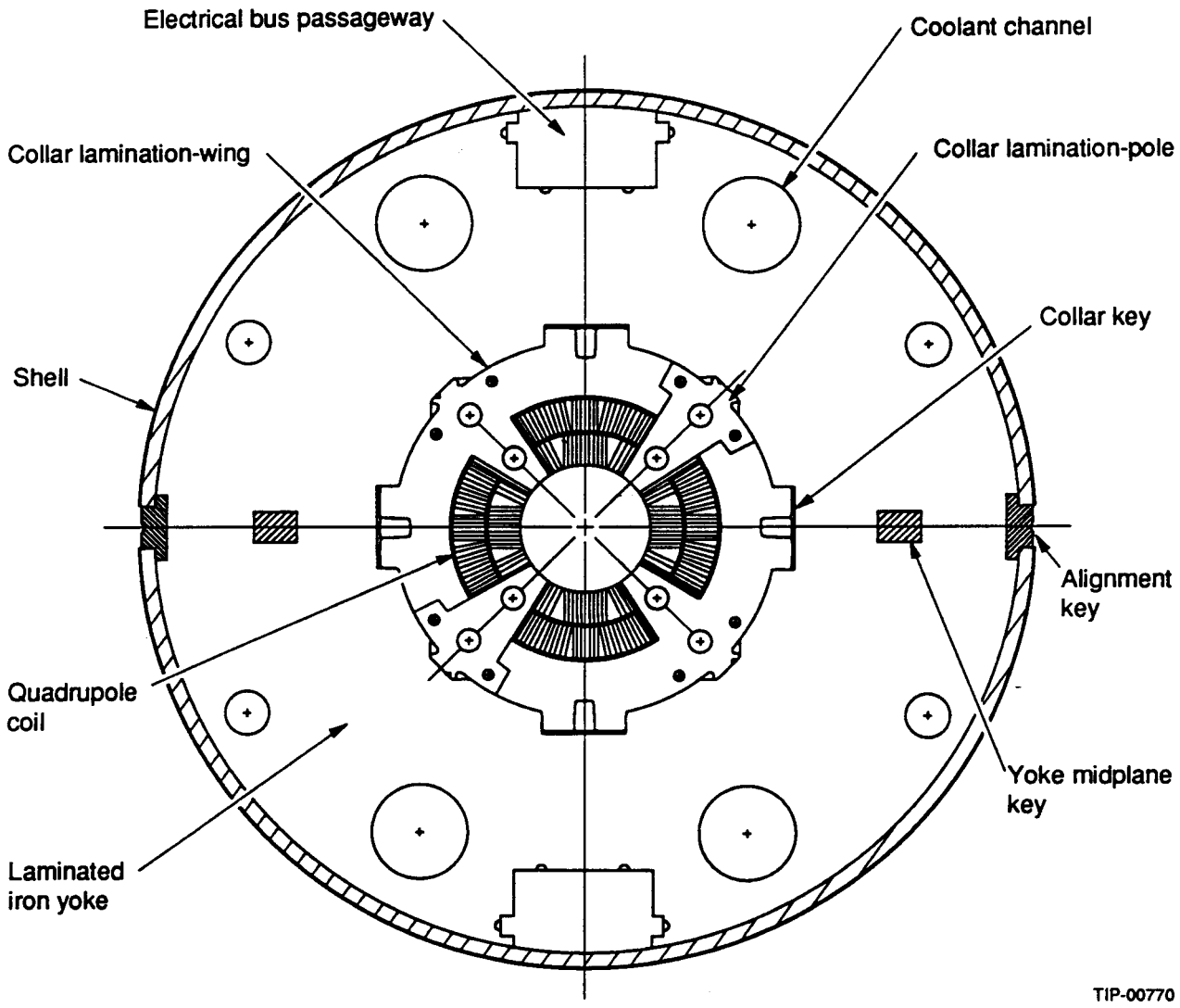

Figure 3.5. Arc Quadrupole Cold Mass Cross Section.

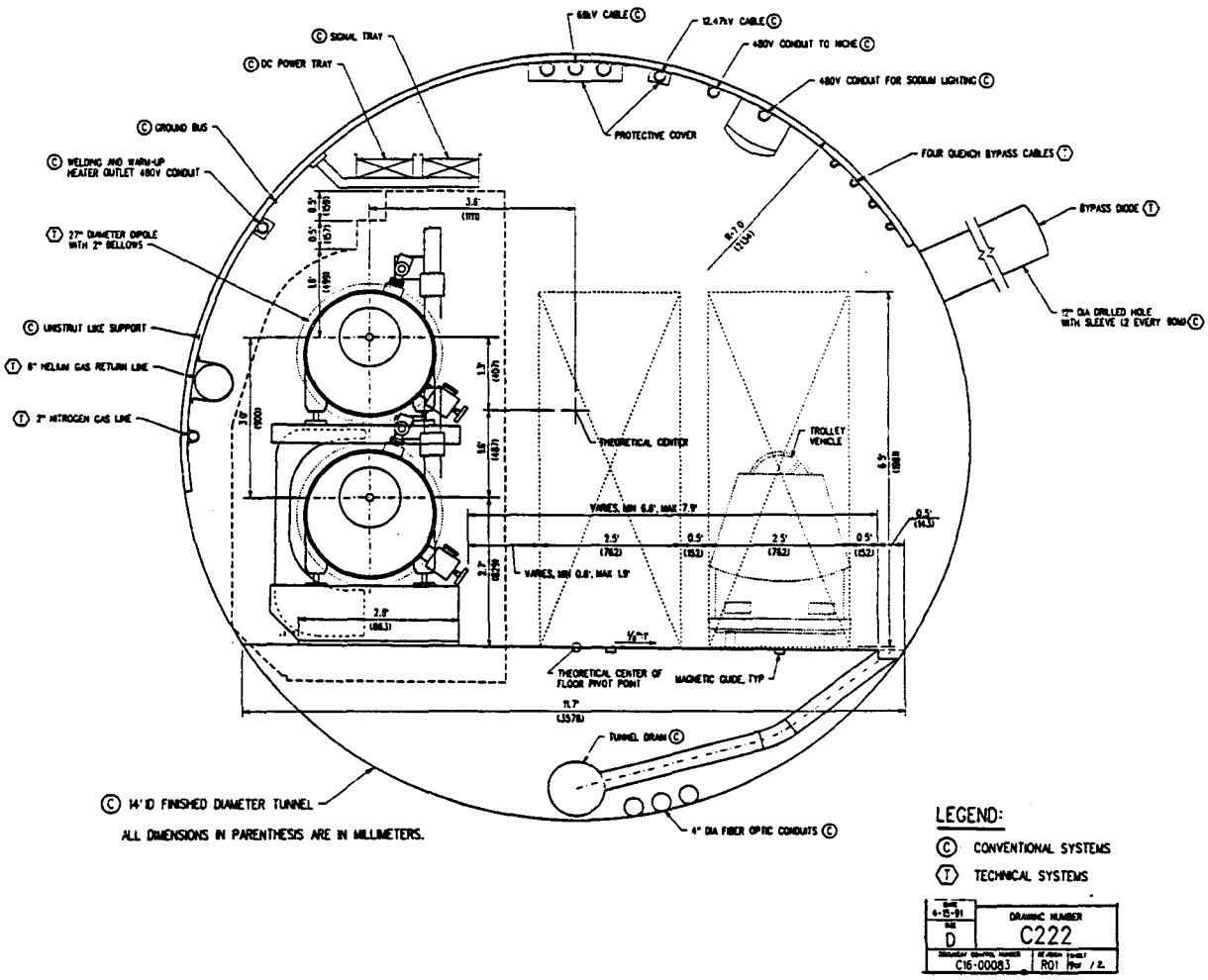

Figure 3.6. Typical Cross Section of the Collider Tunnel.

3.3 RF Accelerator System

Acceleration is accomplished in the radio frequency (rf) accelerator cavities. The rf electrical power is generated in the klystrons and is delivered to the cavities through waveguides. Direct current power must be supplied to the klystrons. The final accelerating system is still under design, but a typical system might have the characteristics shown in Table 3.3. Note that these characteristics apply to each ring. Figure 3.7 is a schematic of rf accelerator system components, and Figure 3.8 depicts a 5-cell rf cavity for the main ring of the SSC.

TABLE 3.3. CHARACTERISTICS OF AN RF ACCELERATOR SYSTEM FOR ONE RING.

PART NAME	NUMBER	LENGTH (m)	DIAMETER (m)	WEIGHT (kg)	LOCATION
Cavity	8	2.1	0.6	1360	Tunnel
Wave Guides	4	20	0.6	500	Gallery-Tunnel
Klystron	2	4.9	1.9	2270	Gallery
DC Supply	2	3	3.7	18,140	Surface

There will be a separate RF shaft and underground gallery close to the tunnel in the Utility sector.

3.4 Interaction Regions and Particle Detectors

There are two interaction sectors—one on the east side and one on the west side—where the proton beam from the upper ring crosses the beam from the lower ring. The beams cross twice in each sector, as shown in Figure 3.9. The places where beams cross are called Interaction Points (IPs); the regions approximately 50 m either side of the IPs are called Interaction Regions (IRs). These regions are numbered from 1 to 8, as shown in Figure 3.10.

The conceptual design of the interaction sector calls for a "diamond bypass," shown in Fig. 3.10, which will double the number of detectors available for research and will allow one detector to continue running while another detector is out of service for repair or maintenance. To cut cost, the inner bypasses will not be built in the initial construction phase. Tunnel stubs will be started.

Surrounding each IR is a huge particle-detector, which will capture information derived from the head-on collision of the two proton beams. Each detector is housed in a large underground vault. Figures 3.11 through 3.13 show the first detector, known as the Solenoidal Detector Collaboration (SDC), which may be located at IR4.

Detector installation is not included in the installation described here, but there are two aspects of the IRs that bear on accelerator installation: the utility bypasses around the IRs, and installation of the IR quads (sometimes referred to as low-beta quads). The IR quads are the largest magnets (weight = 20,000 kg) to be installed in the detector halls. Because the final quads must be close to the IP (within 20.5 m), they will be located on a 2-story-high trestle (about 7.24 m high) just outside the particle detectors (see Figure 3.14).

The IR quads must focus the beams down to a diameter of a few microns. In order for these tiny beams to intersect properly, there can be no vibration or other motion of the quads. Furthermore, major maintenance of the detector will require that the quads and the trestle structure be disassembled and moved out of the way. There will be two overhead 100-tonne bridge cranes with 20-tonne auxiliary hoists in the underground hall that will be used for detector assembly.

The utility bypasses (Figure 3.15) are needed to move electric power and cryogenic fluids to the other side of the IR. Furthermore, the bypasses will have niches containing power supplies and controls for the IR quads. It is likely that the IR quads will be superconducting magnets; hence cryogenic installations may be required.

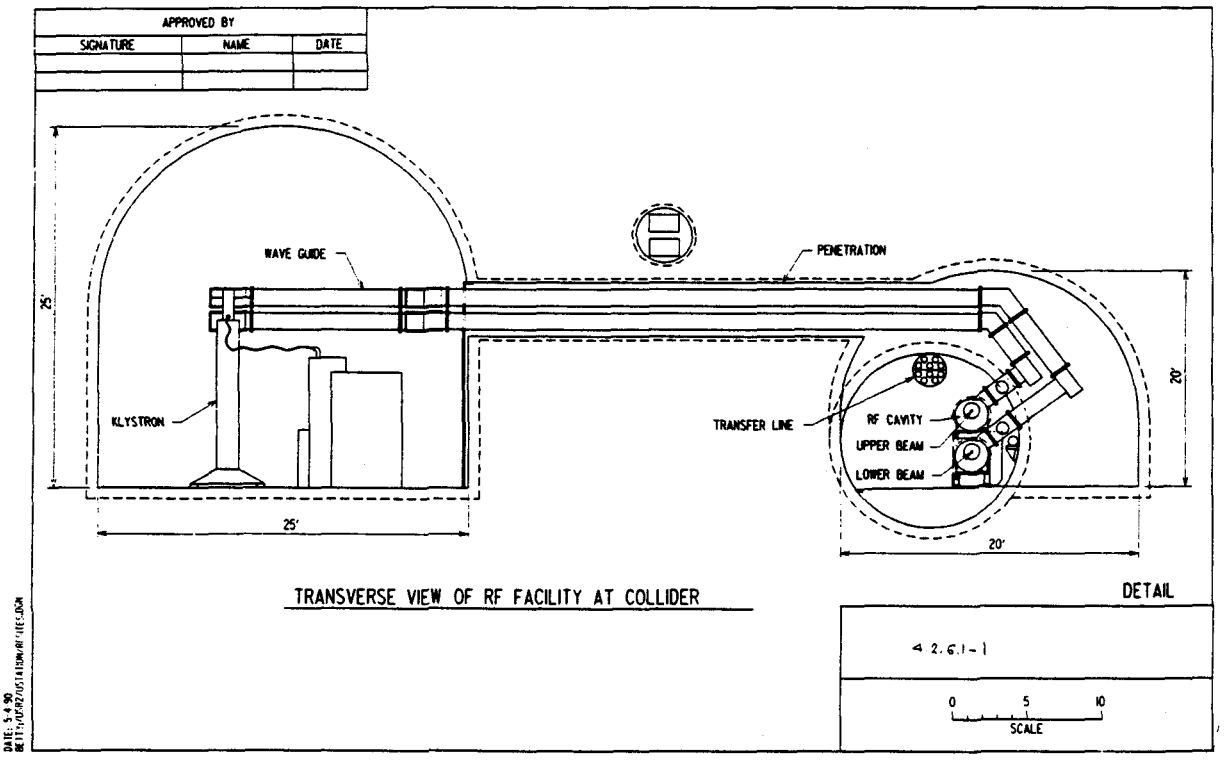

Figure 3.7 Schematic indicating the Positions of the Klystrons Waveguides and RF Cavities.

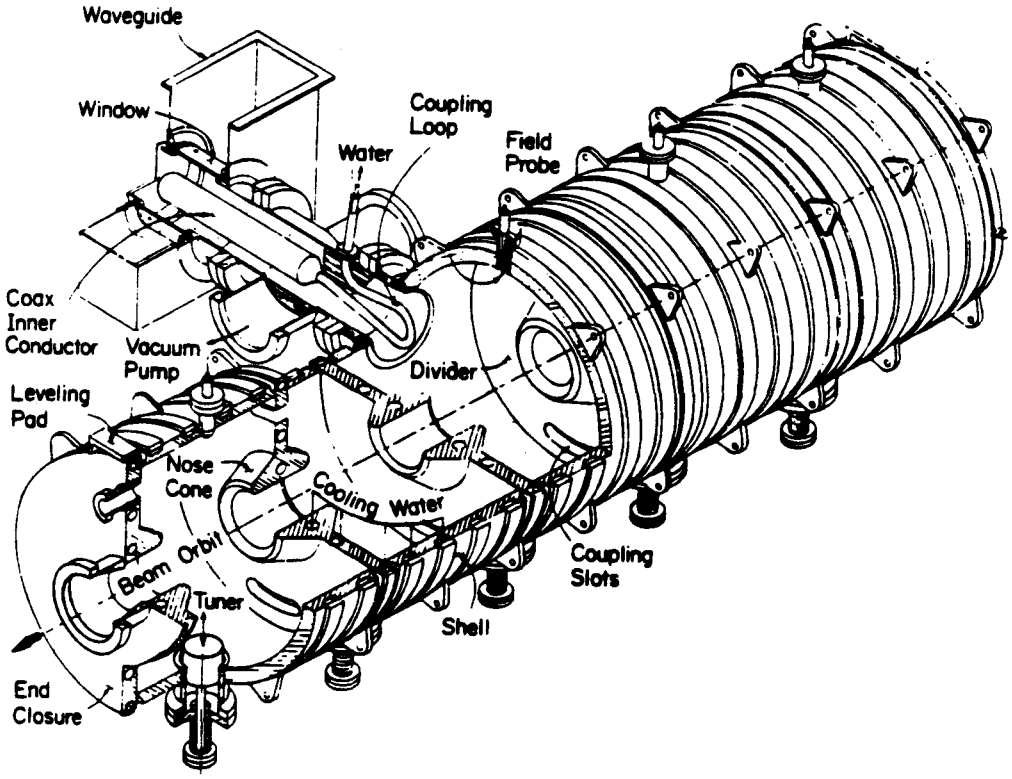

Figure 3.8 Design of a 5-cell RF Cavity for the SSC Main Ring.

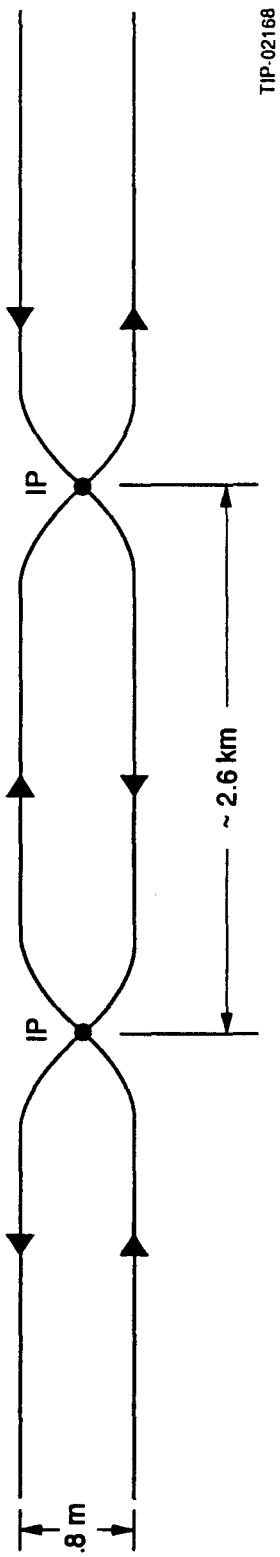

Figure 3.9. Vertical Cross Section through Interaction Sector Viewed from Inside the Ring.

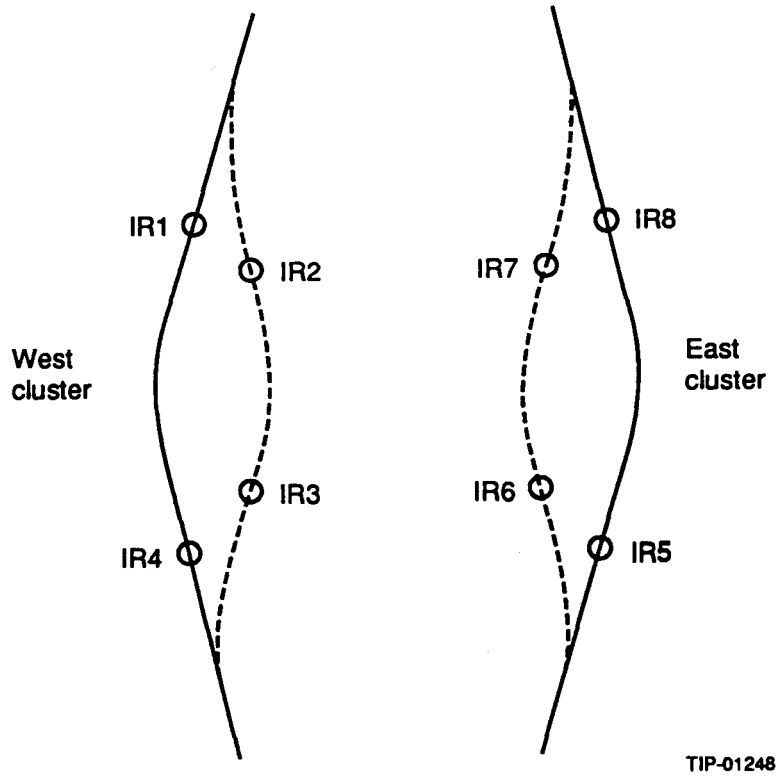

Figure 3.10. Interaction Regions with Diamond Bypass.

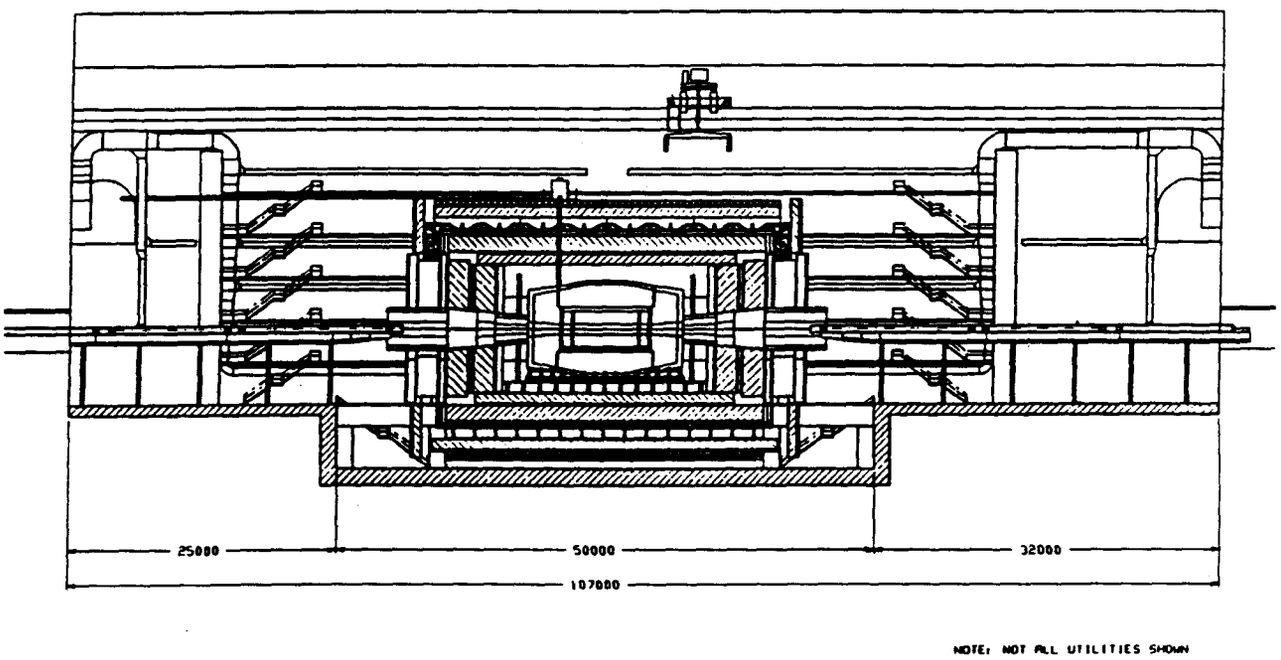

Figure 3.11. SDC Scintillator Calorimeter Detector, Vertical Section (Dimensions in Millimeters).

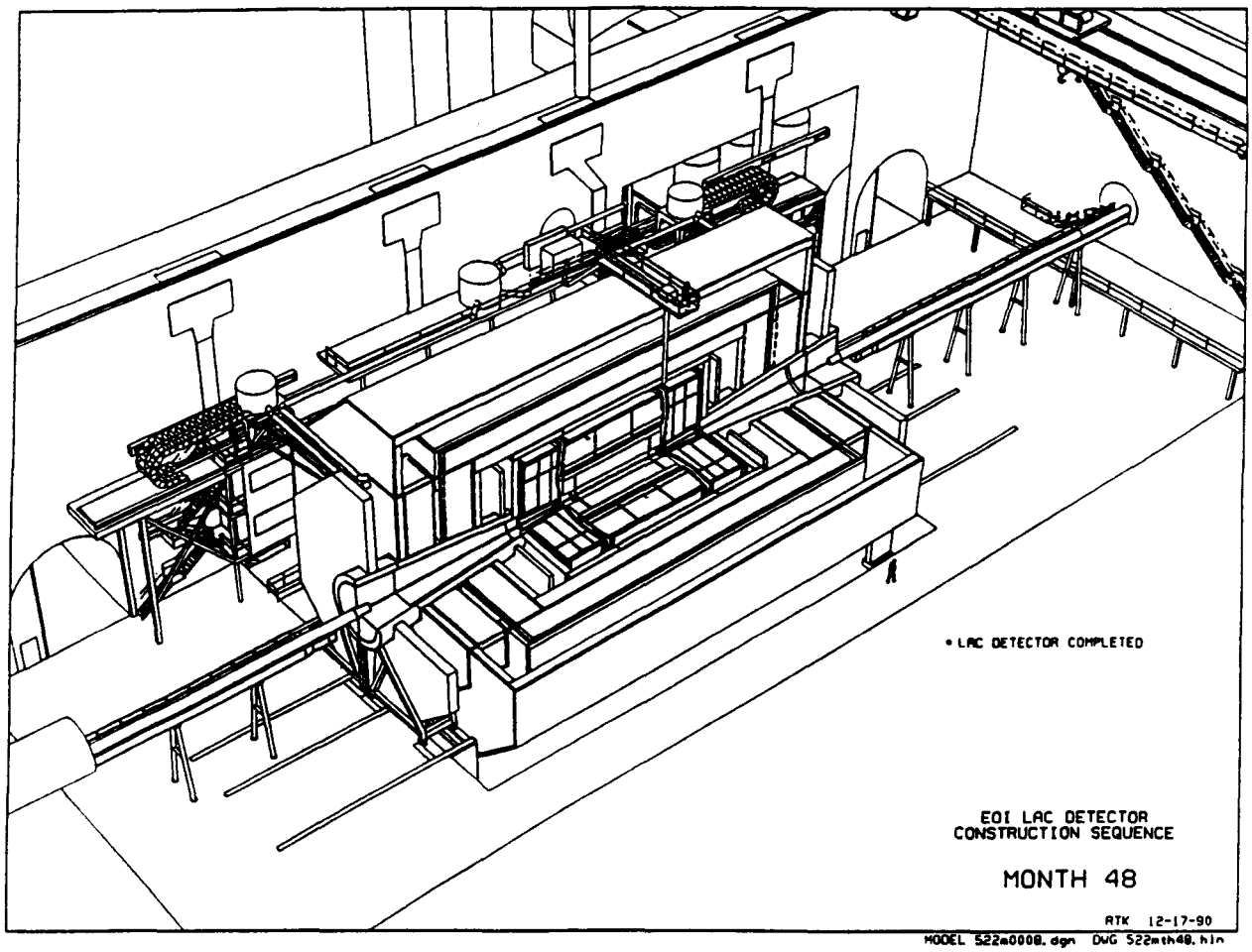

Figure 3.12. Isometric View of SDC Detector and Beam Lines. (IR Quads Are Not Shown).

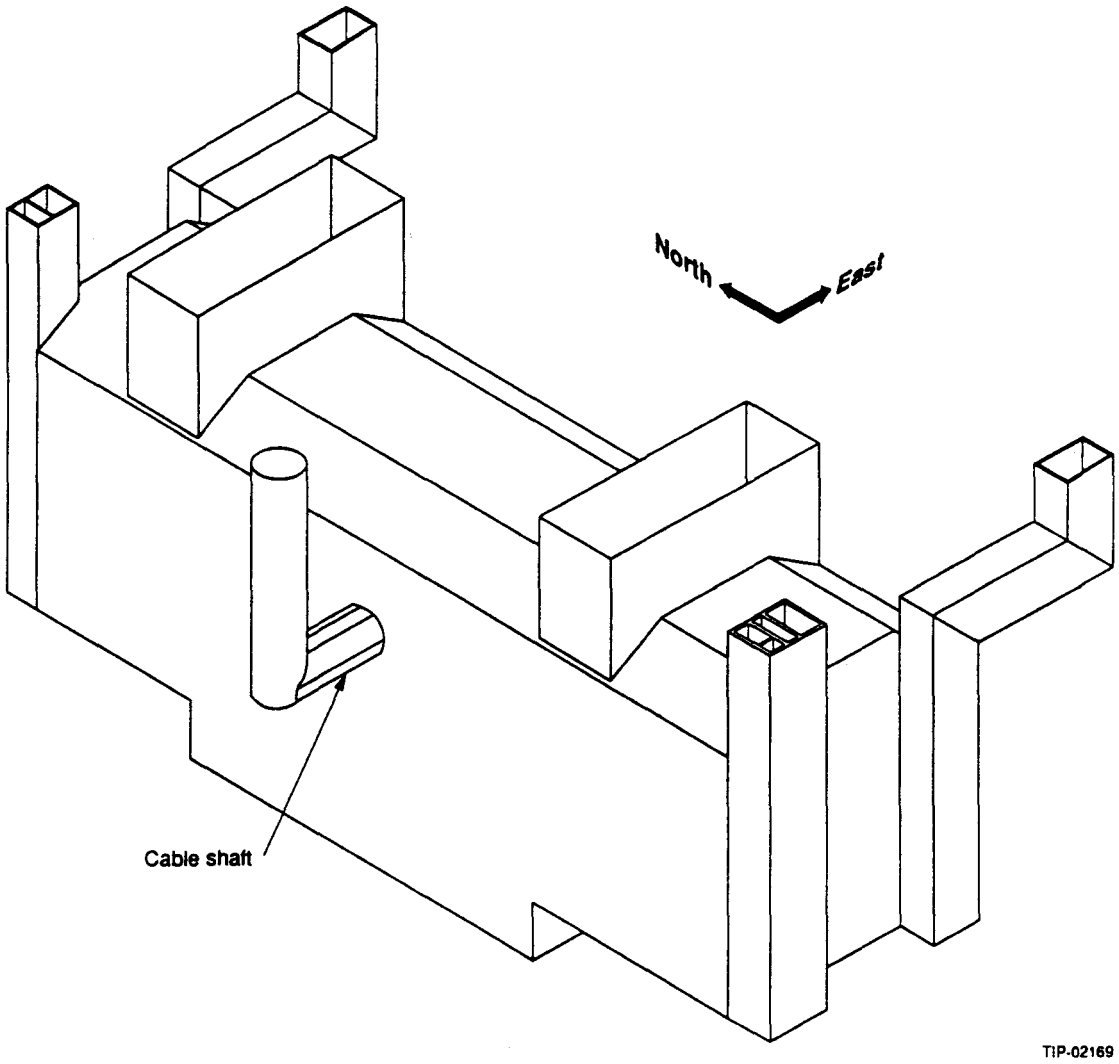

Figure 3.13. SDC Underground Hall.

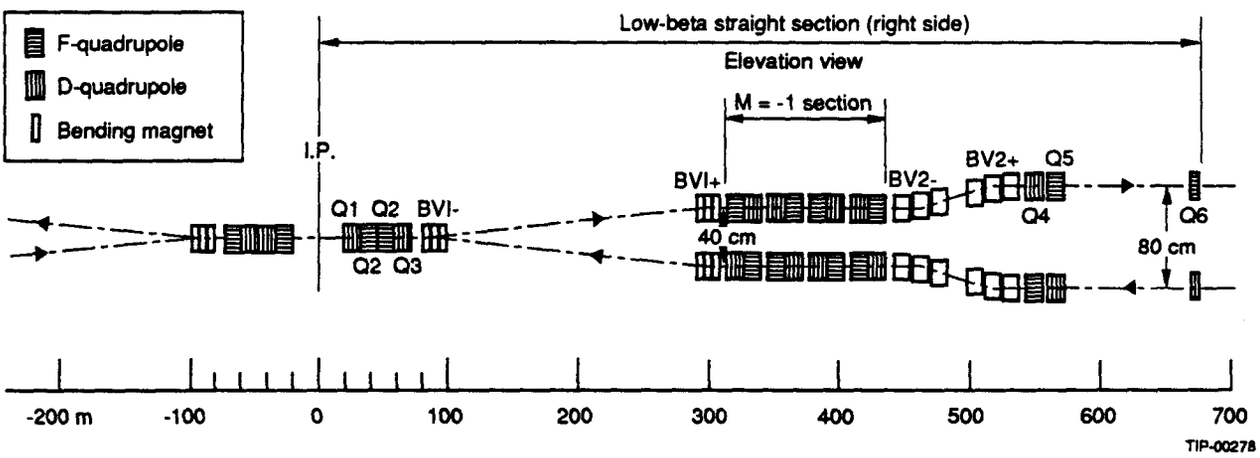

Figure 3.14. Placement of IR Quads Relative to the Intersection Points.

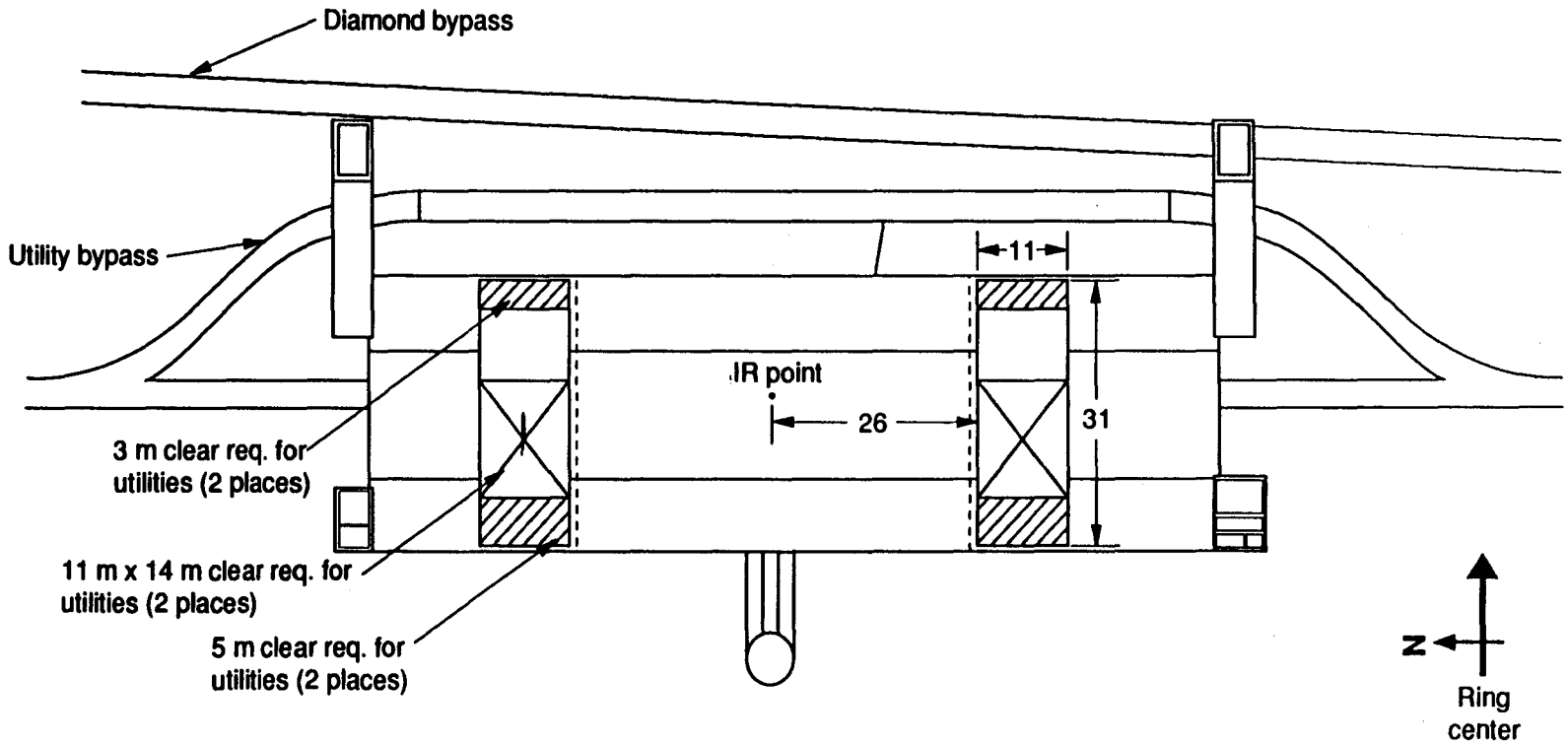

Figure 3.15. Horizontal Section Showing Utility Bypass.

3.5 Beam Dumps

During normal operation, each collider ring is loaded with about 15,800 2-TeV proton bunches. Bunch separation is 5 m, bunch length is about 15 cm, and bunch diameter is a couple of millimeters. These bunches are accelerated to 20 TeV. Then the IR quads focus the bunches to increase the probability that the protons will collide. The beams coast in that condition until collisions or other beam loss mechanisms have reduced the number of protons in the ring to the point that too few collisions are taking place. When this point is reached—in about 24 hours—the remaining beam is dumped. Figures 3.16 through 3.18 show the beam lines and the collider beam dump.

The dump lines are about 1.9 km long and contain very few magnets. The beam dump at the end of the line will require special installation. A concept is shown in Figure 3.18. The beam entering the dump line is less than 1 cm in diameter. Special magnets blow up the diameter to nearly 2 m before entering the dump. This reduces the maximum temperatures generated in the core of the dump. Even then, a closed-circuit cooling water system with peak capacity of 1 MW may be required.

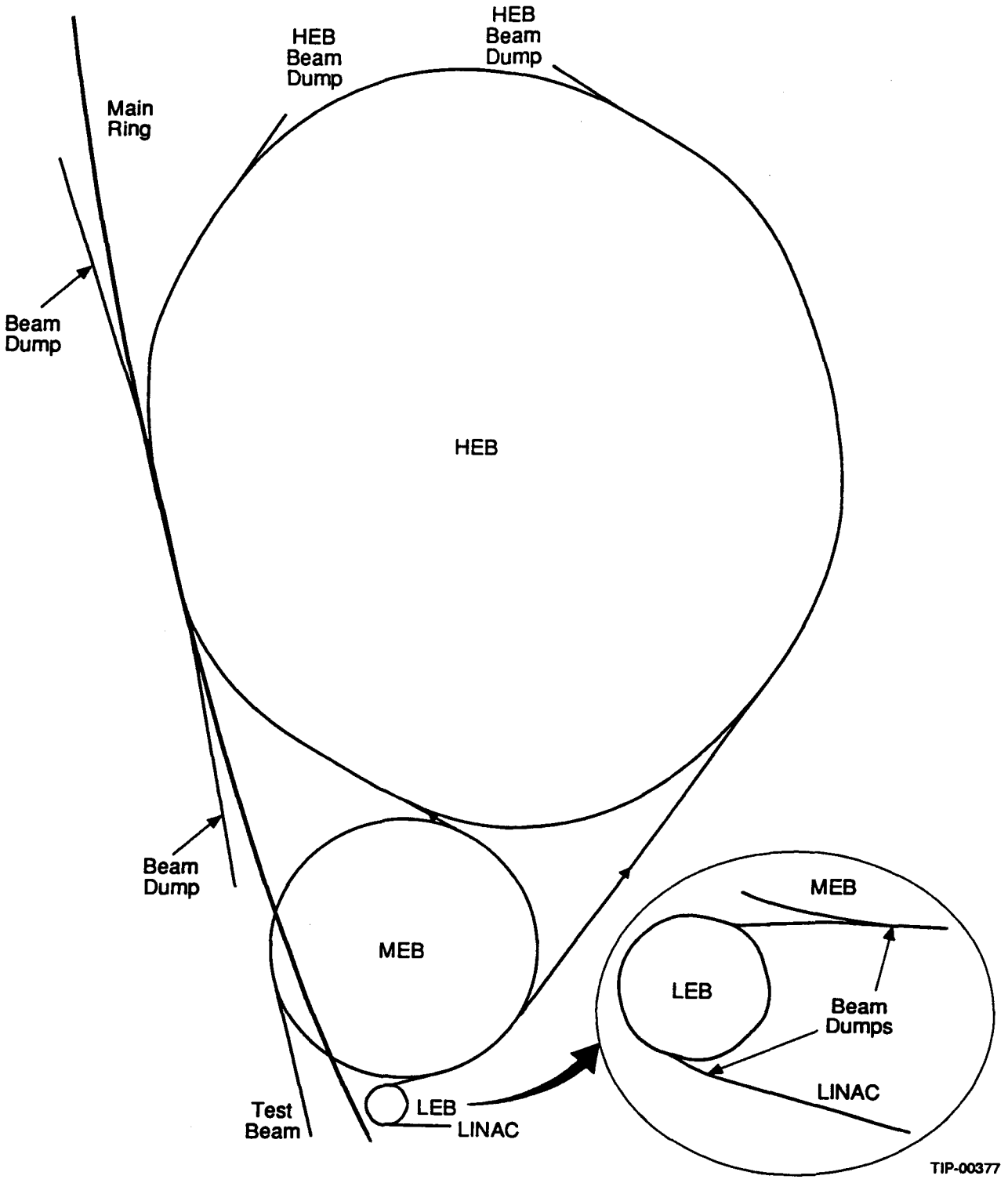

Figure 3.16. Injector Complex, Dump Lines and Test Beam Line.
Note: Test beams come from the MEB and are not related to Collider Installation.

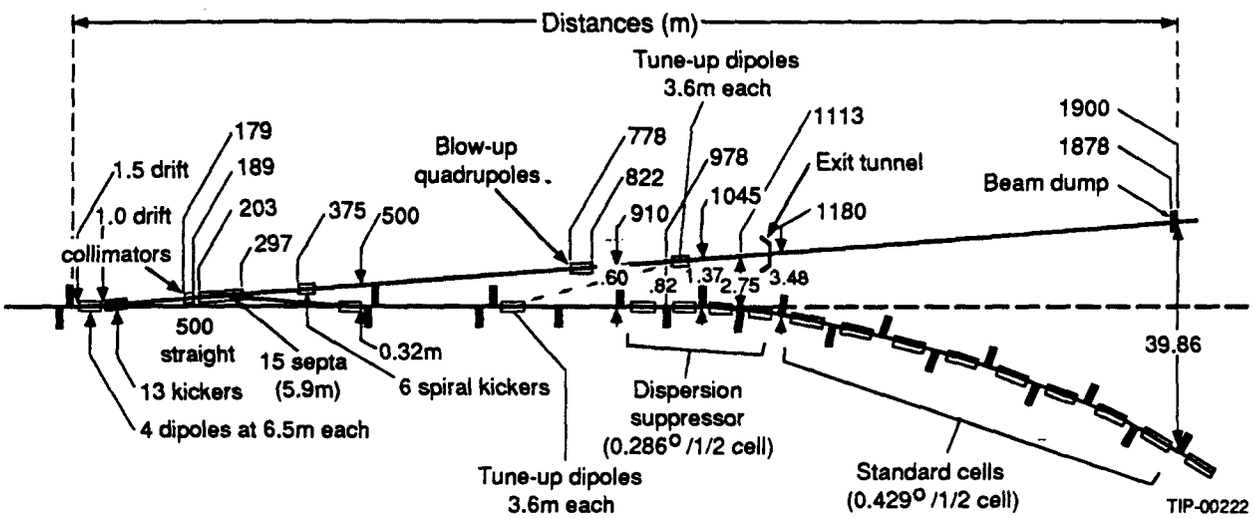

Figure 3.17. Collider Dump Schematic.

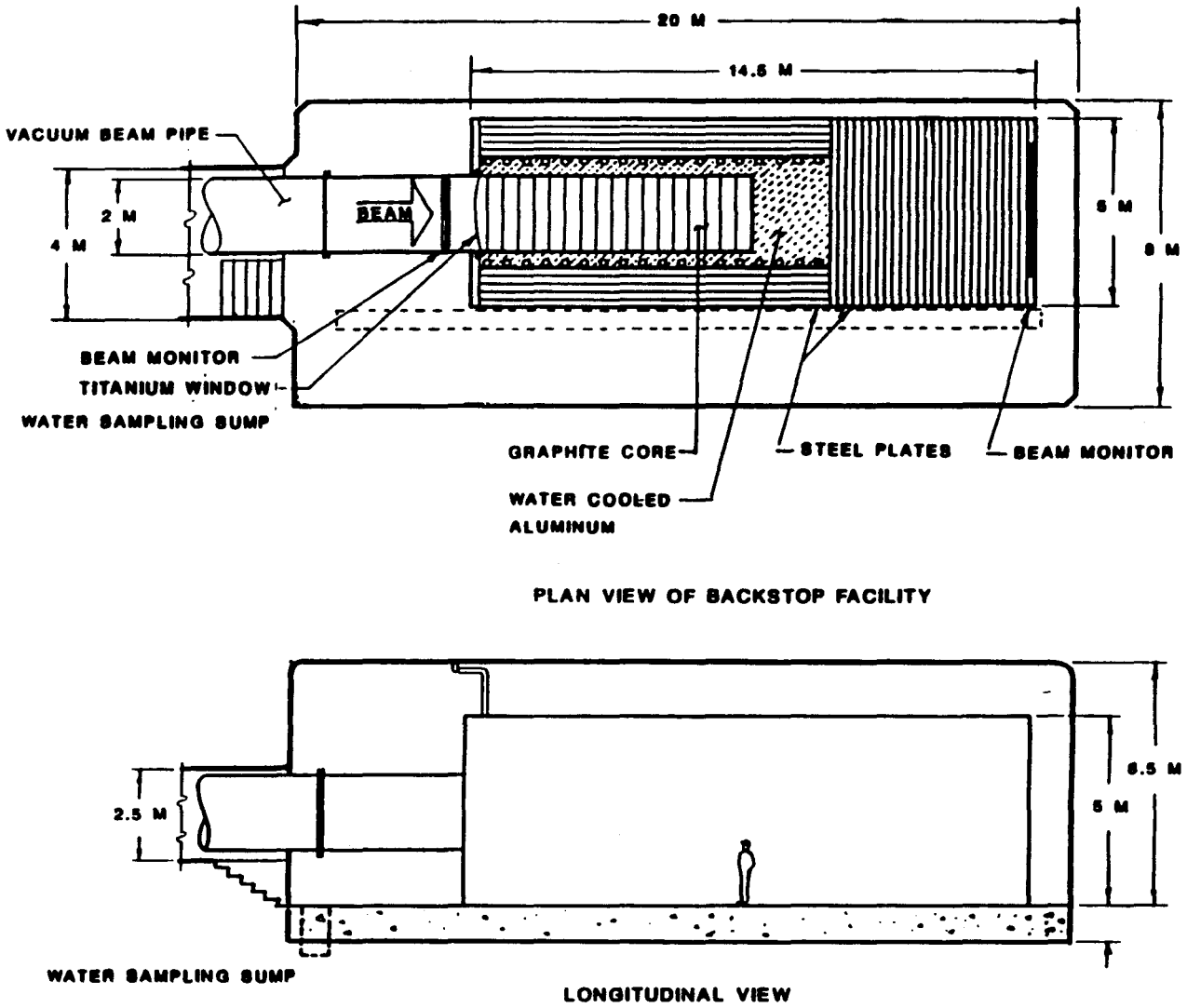

Figure 3.18. Collider Beam Dump.

4.0 CRYOGENICS

Equally spaced around the ring at E-sites will be 10 vendor-installed cryoplants with a production capacity of 35 gal./sec of He at 4.15 Kelvin. This system will require an electrical input of 5 MW. Liquid nitrogen will either be purchased or provided by a central air liquefaction plant to be built. Cryogenic distribution lines will go down the utility shaft to an alcove opposite the shaft gallery (see Figure 2.7). From there they enter the nearest spool piece in each direction of the tunnel. At each spool piece (90 m apart) there is an insulated pipe going to a "warm" gas return line that runs the length of the tunnel back to the E-site shaft and back up to the cryoplant. The main source of warm gas return boil-off is the electrical power leads entering the spools. Installation of the return line requires welding and attachment to the wall of the tunnel (see Figure 3.6).

5.0 VACUUM AND COOLING WATER SYSTEMS

The collider has two independent vacuum systems: the beam-tube vacuum system (~10^{-10} Torr) and the insulating vacuum system (~ 10^{-6} Torr) for the cryostats. The beam tube must be evacuated to prevent collisions between the protons and gas molecules. Such collisions would degrade the beam and cause radiation problems in the tunnel.

About 95% of the beam tube is maintained at a temperature of 4.3 K. At this temperature most gas molecules will condense on the walls of the tube; hence it is easy to maintain a good vacuum. With a vacuum of 10^{-4} Torr before cooldown, one easily obtains 10^{-10} Torr after cooldown. Similarly, one needs only 10^{-2} Torr for the insulating vacuum before cooldown. There will be no permanent roughing pumps on the cryogenic sections of the beamline. Mobile pumping carts—each consisting of a turbomolecular roughing pump, cold trap, gate valve with associated interlock controls, and suitable pressure gauges—will be attached at every other spool piece (180 m apart). Figure 5.1 shows a pump cart in the tunnel.

Fewer than 200 carts are required to pump an entire sector before cooldown. Because of the importance of leak checking, each cart will have electronic readouts of pressure and pumping conditions that can be relayed through standard connections on the quadrupoles to the electronics niches for monitoring by the control system. There will also be additional monitored gauges built into the cryostats.

Most of the utility sector and the IRs will have room-temperature beam pipes. Customary Ultra-High Vacuum (UHV) techniques will be used, such as titanium sputter-ion pumps, non-evaporable getter pumps, titanium sublimation pumps, and cryopumps where appropriate. In addition, the diameter of the beam pipe will be doubled to increase pumping speed. Pump spacing will be determined by special conditions. Details have not been worked out yet.

TABLE 5.1. LOW CONDUCTIVITY WATER NEEDS.

EQUIPMENT	QUANTITY (GAL./MIN.)
RF Cavities	2080
Various Power Supplies	3100
Inj/Ext. Magnets	360
Corrector Magnets	644
Quench Dump Resistors	600
Beam Dump	22

Low Conductivity Water (LCW) needs for cooling are listed in Table 5.1. The large power supplies are above ground, but the rest of the equipment is in the tunnel, most of it in the utility sector. There will be water piping in the shafts, but not much, if any, in the tunnel. In addition, 22,350 gal/min of Industrial Cooling Water (ICW) is required for the helium and nitrogen compressors in the cryoplants. A typical cooling water plant is shown in Figure 5.2.

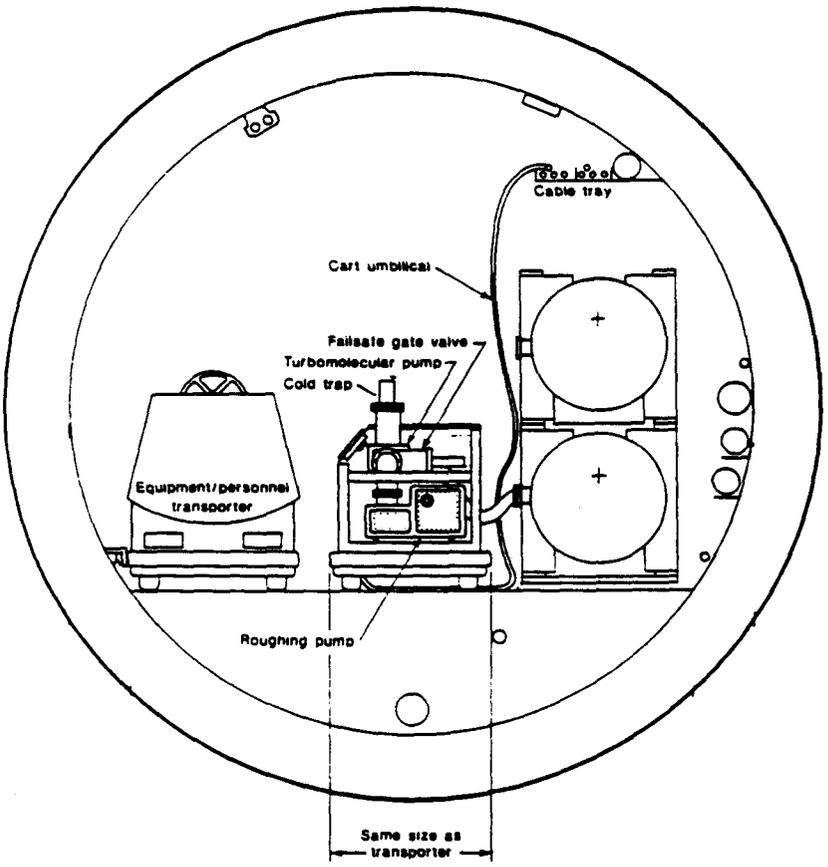

Figure 5.1. Pump Cart in Tunnel.

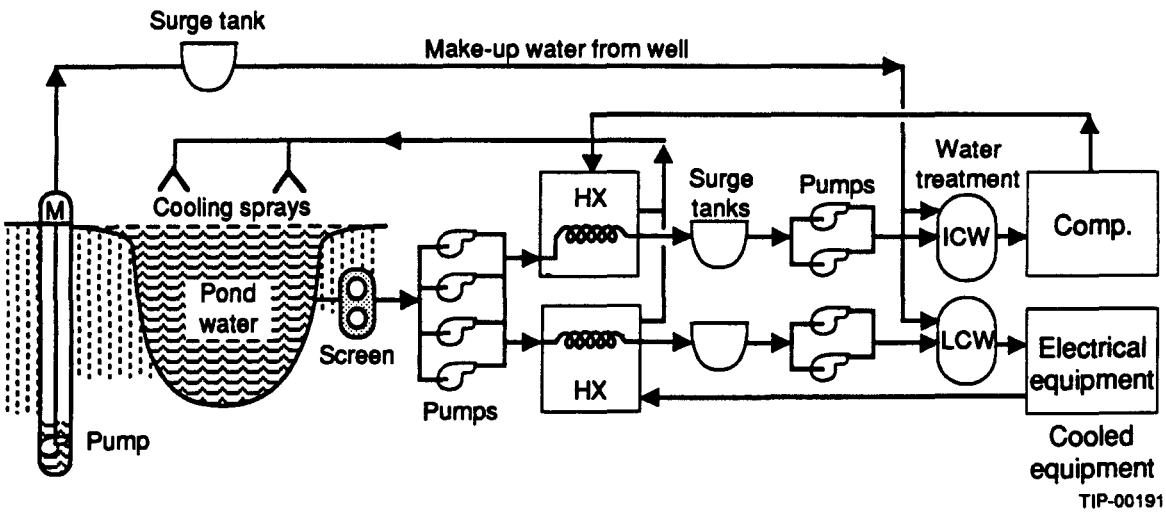

Figure 5.2. Typical Cooling Water Plant Located Near E-Sites.

6.0 ELECTRICAL POWER

The main power for the SSC is supplied by two 345-kV transmission lines, on the west and east sides of the ring (Figure 6.1). Power to the collider tunnel will be at 69-kV. To avoid the cost of purchasing right-of-way, the 69-kV line will be installed in the tunnel, attached to the ceiling (see Figure 3.6). At each E-site the 69-kV cable comes up the shaft, is connected to a surface substation, and goes back down into the tunnel. A possible circuit diagram is shown in Figure 6.2.

Figure 6.3 shows a further breakdown of the 69-kV source into lower voltage lines. Much of this AC power is for conventional systems and the cryoplant. Part of the power is converted to DC before going down into the tunnel.

The main DC circuits are:

- Dipole/Quad Ring magnet P.S. (6.6 kA),
- Correction Element P.S. (100 A), and
- Quench protection Heater Firing Units (HFU).

Each ring is powered separately. The dipole/quad power distribution is divided into 10 circuits that are linked by differential transducers that measure differences in current regulation (see Figure 6.4). The current regulation system, called CECAR, is similar to the one used at the Tevatron at Fermi National Accelerator Laboratory.

The magnetic correction elements are located in the spool pieces. Where possible, elements such as quadrupoles and sextupoles are configured into series circuits spanning half-sectors, similar to the main dipole/quad circuits. Whereas the cabling for the main magnets is mostly inside the cryostat, the cable for the correctors enters and exits at each spool. This was done to enhance reliability because it reduces the number of connections between magnets inside the cryostat. The power supplies for most correctors are in niches spaced 450 m apart along the tunnel.

Should a quench (transition from the superconducting state to the normal conducting state) occur in a superconducting magnet, the power to the half-cell containing that magnet must be dumped to avoid melting the magnet cable. When the quench protection system detects a quench, heaters are energized in the half-cell of magnets where the quench occurred to raise the temperature of all magnets above the superconducting transition temperature. As the resistance of the magnets grows, the main bus current is diverted around the half-cell through the bypass diodes. To protect the diodes and safety leads from excessive heating, four current dump resistors are switched into the circuit (see Figure 6.5).

The electronics for the Quench Protection Monitors (QPMs) and the HFUs are in the niches. Most of the cabling is external to the cryostats, again for reliability and maintainability.

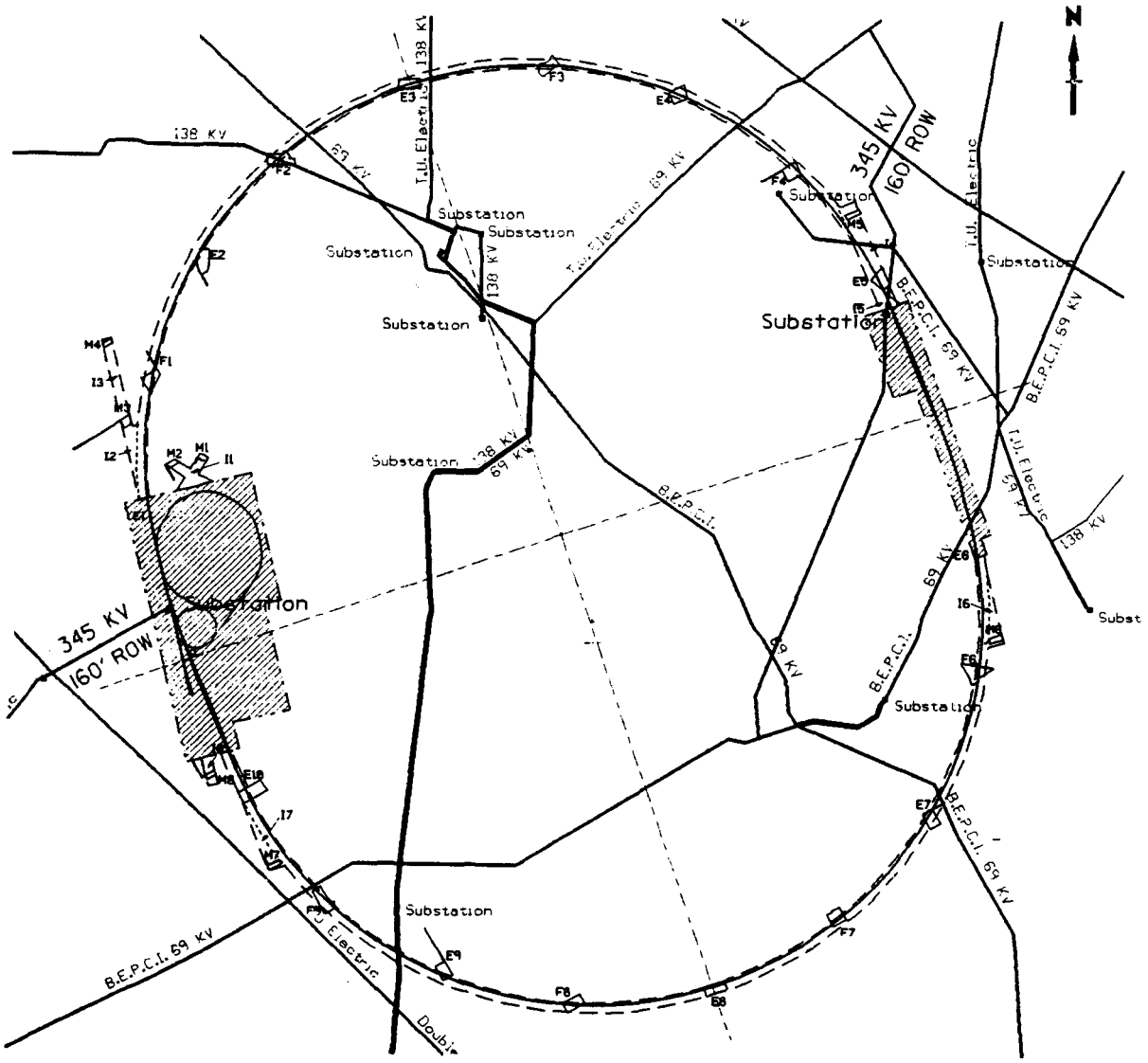
N
138 KV
69 KV
T.U. Electric
Substation
345 KV
160' ROW
B.E.P.C.I. 69 KV
B.E.P.C.I. 59 KV
138 KV
69 KV
Substation
Substation
Substation

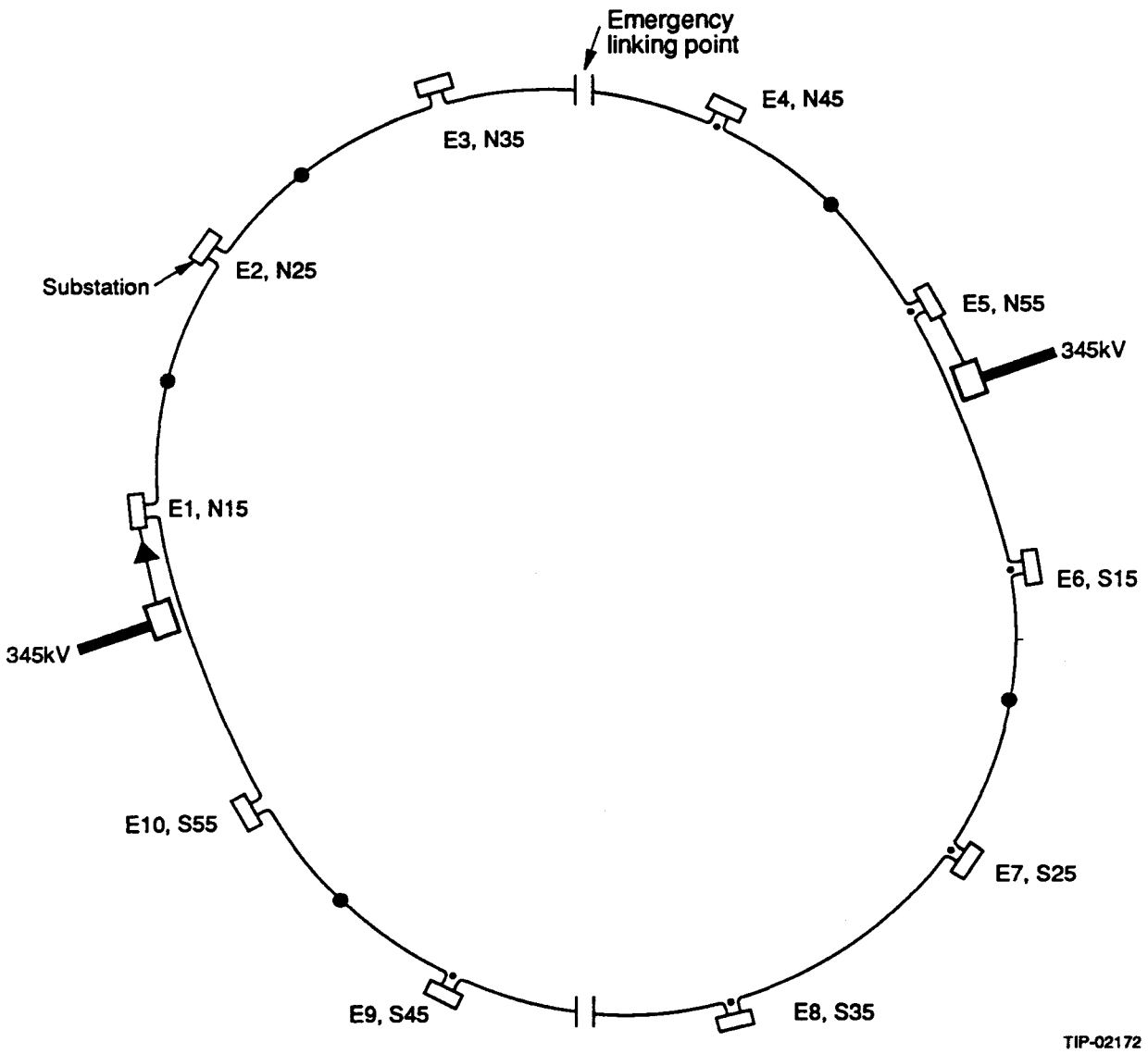

Figure 6.2. Possible Routing of 69-kV Line through the Tunnel.
The east and west distribution lines can be linked if one 345 kV source should fail, thereby maintaining power to the refrigerators.

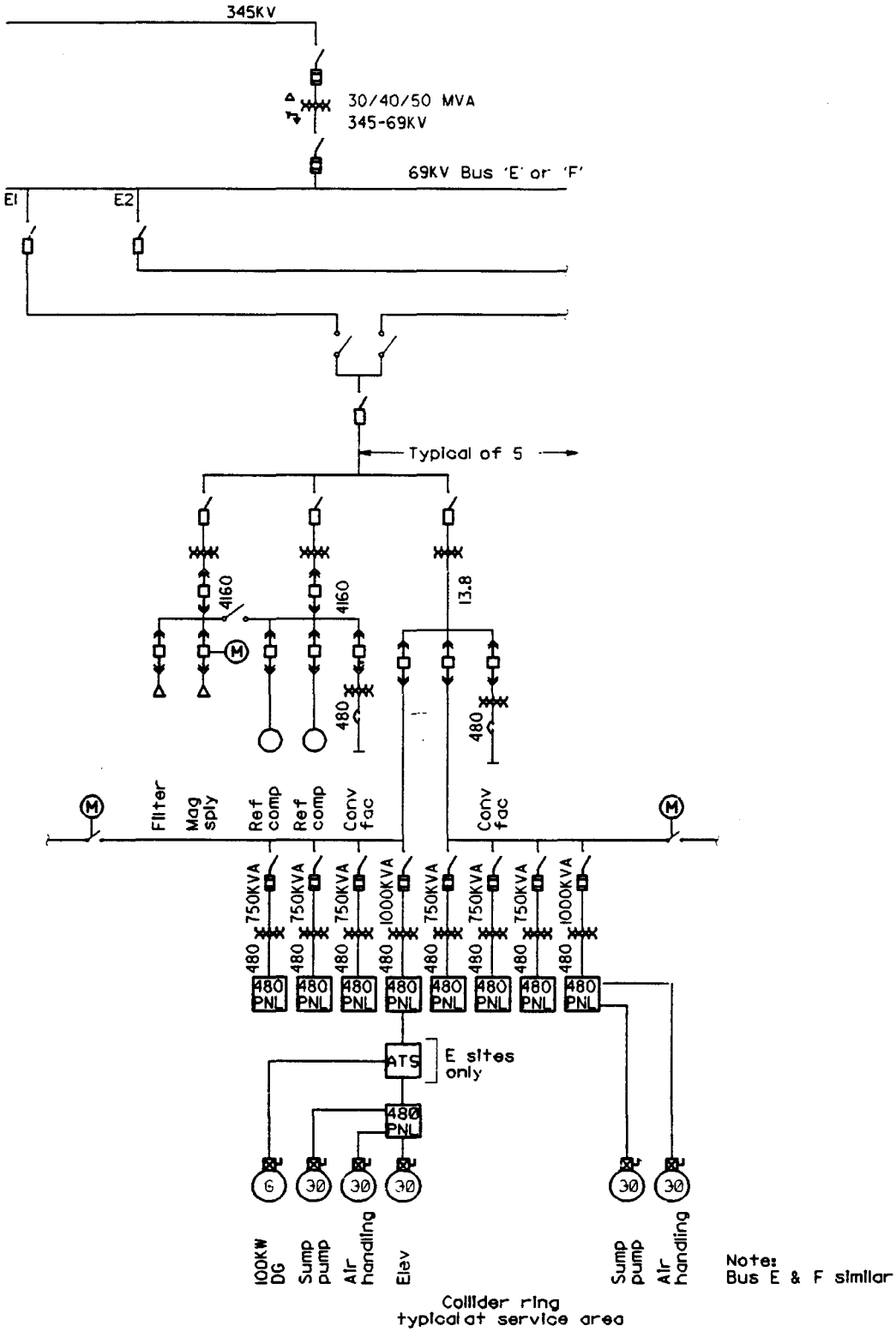

Figure 6.3. Main Ring 69-kV Loop.

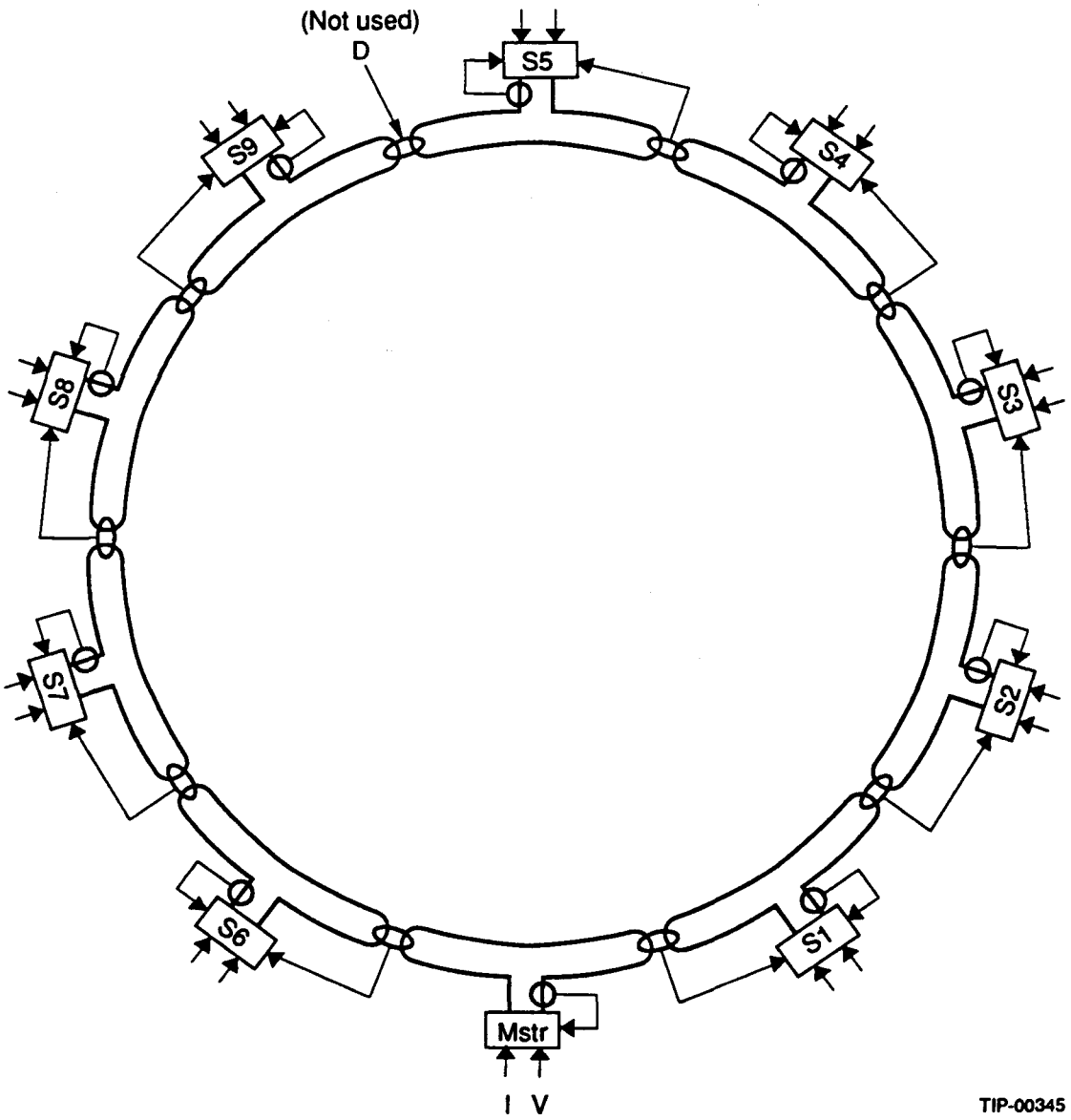

Figure 6.4. Ring Magnet Power Supply System.

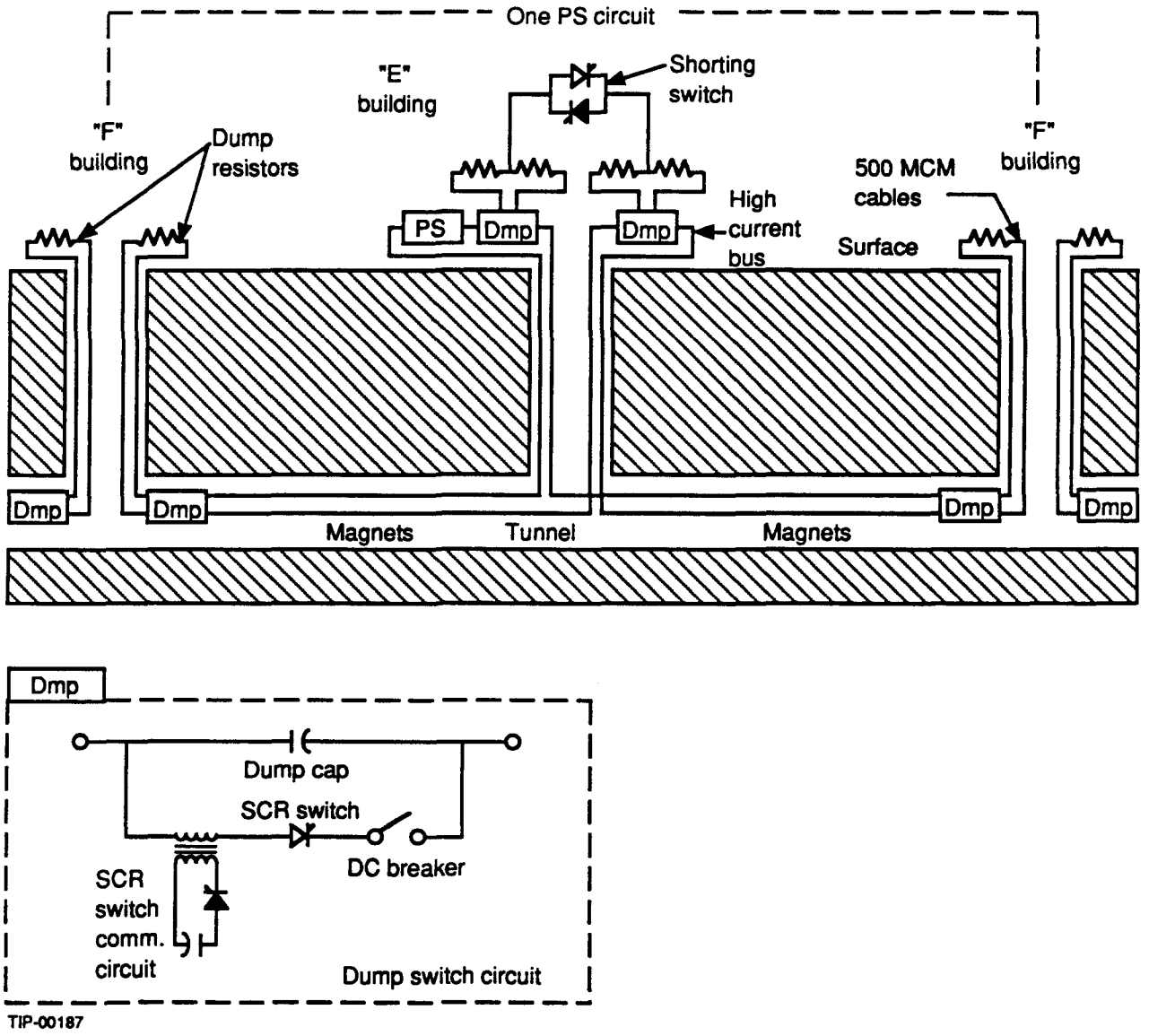

Figure 6.5. Collider Energy Dump System for One Sector.

7.0 INSTRUMENTATION AND CONTROL SYSTEMS

Instrumentation is the eyes and ears of the control system. Beam position in the beam tube will be measured every half-cell by Beam Position Monitors (BPMs). The BPMs and other beam diagnostics are preassembled into the spool pieces. This information is used in synchronization between injector accelerators and the main rings and in adjustments of the phase of the rf power to the accelerator cavities and the current to the correction magnets. Figure 7.1 shows a BPM module.

Each half-cell also has three beam loss monitors (BLMs), used mainly during the commissioning phase of the accelerator, to locate where the beam has left the beam tube. If a BLM is tripped during normal operation, the control system will automatically abort the beam to the beam dump.

There are three levels of computer control:

- Global control from the operations room on the west campus,
- Sector control from a computer that will probably be located at each E-site, and
- Front-end control by computers located in each niche of the tunnel.

Communication from the BPMs to the niches is by electrical cables. Communications from the the niches to the sector computer is by fiber-optic cable. Communications from the sector computers to the operations room computers will probably be by fiber-optic lines in the tunnel, but could be by microwave from the sector buildings. The fiber-optic lines will be installed in conduits under the floor of the tunnel and niches. It is estimated that there will be 90,000 monitor and control points for the collider rings.

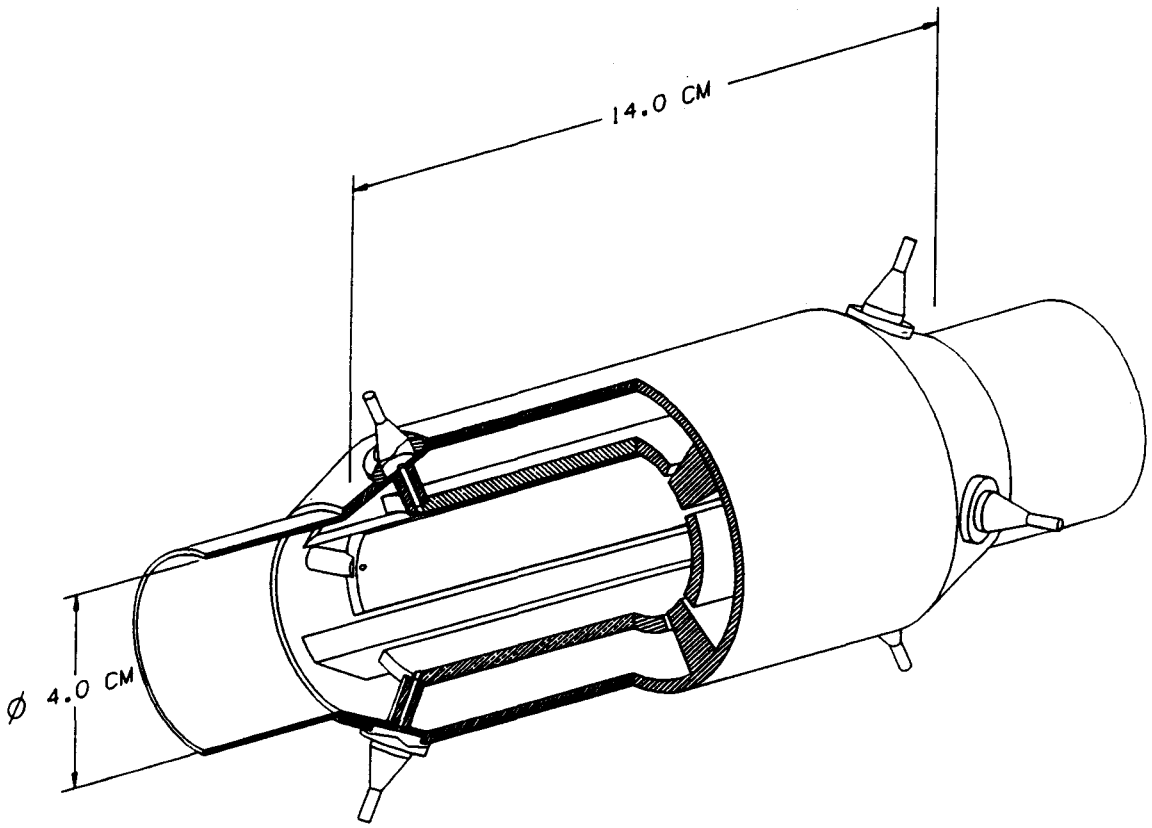

Figure 7.1. BPM Module.

8.0 INSTALLATION PLANNING

8.1 Introduction

Except for those given in Table 1.1, there are very few firm milestones for construction of the SSC. The tunnelling schedule in Table 2.4 may change, and even the location of magnet shafts may change. The order in which sectors are installed is preliminary. Further study may suggest other schedule changes.

There are 10 sectors, each about 8.8 km long, to be installed. There will be only five shafts through which magnets can be transported into the tunnel. Figure 8.1 gives their locations and BODs.

The utility shafts can be used to lower equipment less than 4.00 m in diameter. Personnel shafts will contain a stairway, an elevator (2.5 m x 3.0 m) and ventilation ducts; they cannot be used to transport large pieces of equipment into the tunnel (See Figure 2.4 above for locations of shafts).

8.2 Installation of the First Sector (E2 to E1)

Four hundred ninety dipole magnets enter the tunnel at the approximate rate of 1.6/day through the E1 magnet shaft. There are also 98 quadrupoles and 98 spool pieces. They are transported to the E2 end of the tunnel and are connected to one another. In this way no magnet has to be transported past a previously installed magnet. Because this is the first sector, magnet installation is expected to take twice as long (14 months) as it will eventually (7 months).

Before the magnets can be installed, other technical systems must be installed (see Table 8.1). We plan overlapping of many activities.

TABLE 8.1. PRE-MAGNET TECHNICAL INSTALLATIONS.

WORK	START DATE (1994)	DURATION (MONTHS)	FINISH DATE
Survey and Mark Magnet Location	01 Jan	2.5	15 Mar
Move Materials into Tunnel	01 Feb	1.0	01 Mar
Install Warm Gas Piping	01 Mar	3.0	01 Jun
Put Equipment Racks in Niches	01 Mar	2.0	01 May
Install Fiber Optics	01 Apr	2.0	01 Jun
Install Cable Trays	15 Apr	3.0	15 Jul
Install Cable in Trays	01 Jul	5.0	01 Dec
Install Magnet Stands	01 Sep	3.0	01 Dec 94
Install Magnets	01 Oct	14.0	01 Dec 95

Interconnect kits connect magnets and spools. These connections require welding the high-vacuum beam pipe for the proton beam, three helium pipes, and one or more nitrogen pipes. Superconducting cables (which must be soldered) connect one magnet to the next. The superinsulation layers also are made continuous from one magnet to the next. Finally, a vacuum-tight sleeve covers the interconnect region. Automatic orbital welding machines join the pipes. Vacuum leak-checking accompanies welding operations. Interconnecting spool pieces and magnets is similar to connections between magnets. Each spool piece requires installation of a set of valves, gauges and ion pumps. The valves connect the turbomolecular pumps to the vacuum systems. The range of pressures involved requires several types of vacuum gauges. As the magnets are being installed, terminals will be put on the cables; cables will be connected to the equipment racks in the niches, and the radiation monitoring safety systems will be installed.

After the magnets are installed, they need to be leak-checked; the spools must be connected to the warm gas piping; the cryo-distribution system must be connected; cables must be connected to the spool

pieces; and the power systems checked. It is estimated this will take an additional three months. Next, the magnets will be cooled down and the system checked for heat leaks. This could take another two months.

Note that the half-sector from E2 to F1 is connected to the cryoplant at E2, while the half-sector F1-E1 is connected to the E1 cryoplant. This means that half-sector cooldown and system testing can start about eight months before the estimated sector completion date of 96Mar01. It is even possible to run a system test on the first six cells (1.08 km) even earlier. (The isolation spool and U-tube box will allow special terminations.)

8.3 Global Planning

Detailed schedules incorporating a learning curve have been generated for all half-sector installations. The installation of cabling and magnets are on the critical path. The training of magnet installation crews is very important. Less than halfway through the first sector installation, the crew will divide. Each half will be supplemented with additional workers. As new magnet shafts become available, crews will divide again and be supplemented. Eventually there will be five crews, see Fig. 8.1. In all but one half-sector, magnets can be installed in such a way that new magnets do not have to be transported past already installed magnets. If half-sector tunnel completions vary because of plan changes or tunneling delays, backfill installation may be affected.

Over 100,000 items are to be installed in the tunnel. Information on these components will be stored in a Relational Data Base Management System (RDBMS). Experience at the CERN LEP installation indicates accumulation of over 6 gigabytes of data during SSC installation. The management system must capably supply the managers and installation crews with planning and logistic support.

The planning support will include charts showing planned/actual durations of installation activities. Each activity is assigned a duration and 'resource-loaded,' showing the amount of labor and components needed to complete the task. All activities tie to the Work Breakdown Structure (WBS). The WBS in turn relates to the budget estimate and funding profile. Thus, the activity schedule affects the budget, and vice versa.

The logistic support system tracks data such as "what, when, from where, to where, how, and by whom" for each component. Major component information includes identification numbers, descriptive names, sizes and weights, and transport/storage requirements. Storage and testing building data includes identification numbers, capacities, portal sizes, etc. Transport and handling systems have to be identified, rated for capacity and statused every day. For example, one needs to know when a given elevator shaft is operable and if it is capable of transporting a certain sized object. A typical output from logistic support would be a weekly transport list. The system should also do planning simulations. Once installation starts, the system includes status information from the transport/handling devices, installation status for components from contractors and sector coordinators, and current installation date requirements from the planning support programs based on the total project status. The whole system becomes highly interactive. Artificial Intelligence techniques might be applicable.

There are several other databases that influence the installation database. The procurement system database determines if a given component will be available when it needs to be installed. The safety systems database indicates who entered the tunnel, when and for how long. This information tracks the time it takes to make certain types of installations. The accelerator design database describes and locates magnets and accelerating components in the tunnel. The mechanical drawing database details information on component characteristics, which could be useful for understanding the effects of design changes on transport and installation.

In summary, global planning has started, but much remains to be done.

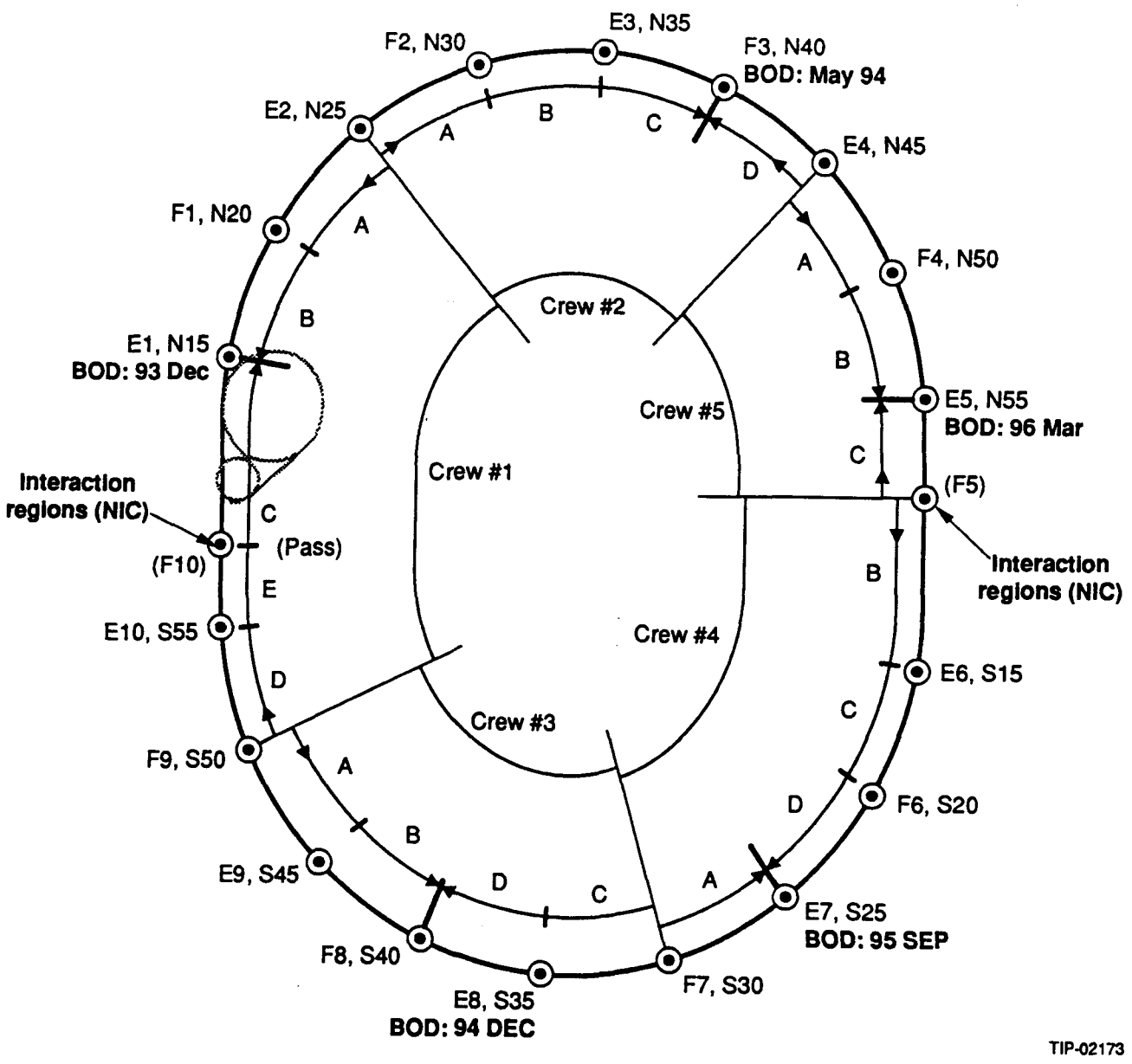

Figure 8.1. Tentative Order of Magnet Installation and Crews.