SSCL-456

SSCL-456

Superconducting Super Collider Laboratory

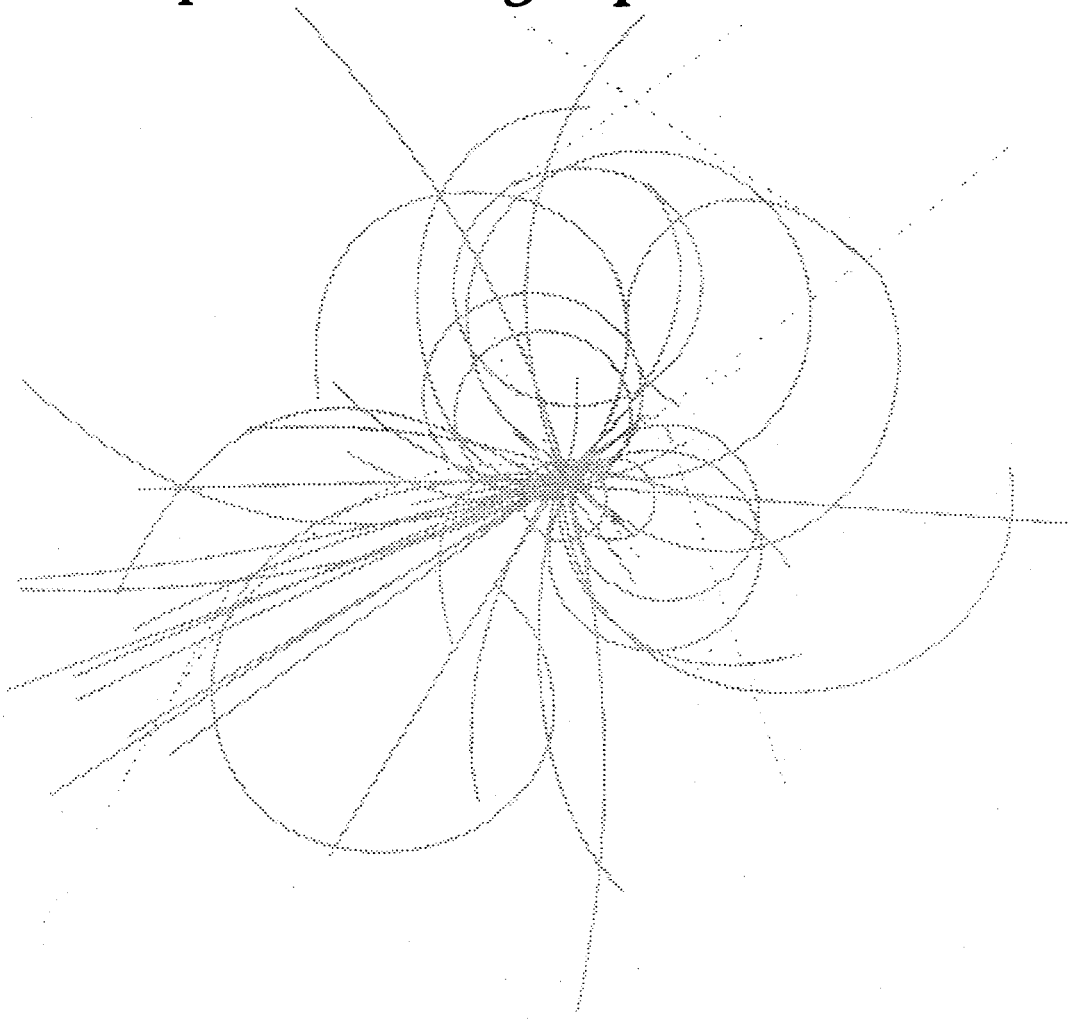

Instrumentation for SSC Test Beams

H. Fenker, F. Stocker, and R. Schailey

May 1991

To be published as a Conference Record, IEEE, New York

SSCL-458

Planning and Development of Underground Facilities for the SSC*

T. Lundin, C. Laughton, D. Earsom, and M. Syphers

Superconducting Super Collider Laboratory†
2550 Beckleymeade Ave.
Dallas, TX 75237

May 1991

*Presented at the 1991 IEEE Particle Accelerator Conference, San Francisco, CA, May 6–9, 1991.

†Operated by the Universities Research Association, Inc., for the U.S. Department of Energy under Contract No. DE-AC02-89ER40486.

Planning and Development of Underground Facilities for the SSC

T.K. Lundin, C. Laughton, D.L. Earsom, and M.J. Syphers

Superconducting Super Collider Laboratory
Dallas, Texas 75237

Abstract

The Superconducting Super Collider (SSC) features two 20 TeV counter rotating proton beams which will be housed in 87 km (54 miles) of tunnel. This very large scale program and its time frame for construction requires the acceleration and overlap of activities and possible compromises between civil construction and technical needs.

INTRODUCTION

Development of the SSC began in 1975 under the direction of the Central Design Group at Lawrence Berkeley Laboratory. Because a specific site for the project had not yet been determined, civil construction aspects driven by topography and geology were necessarily wide ranging and generic. This effort culminated in the publication of the Conceptual Design Report (CDR) in 1986 [1].

In 1988, a decision was made to select a Texas site located in Ellis County about 48 km (30 miles) south of the City of Dallas central business district. After the site was selected, conceptual designs of the accelerators were updated to reflect advances made since the CDR was published. Simultaneously, the conceptual design of civil construction elements was updated to reflect both accelerator machine changes and the specific topography and geology found at the Texas site. This effort resulted in the publication of the site Specific Conceptual Design Report (SCDR) in 1990 [2].

The primary focus of this paper is to provide an update of underground components of civil construction as of April, 1991. Additional discussion of geotechnical characterization and underground construction of the SSC project is given by Nelson and Lundin [3].

ACCELERATOR ENCLOSURES

General

Civil construction relies on technical system design and configuration to define geometries of underground enclosures; however, in many cases the design of such systems is not complete. Therefore to achieve the project schedule and adhere to budgetary constraints, certain assumptions and compromises must be made to define the facilities to be constructed. This process is necessarily highly interactive and iterative as concerns and constraints are communicated between civil engineers and the physics community. The resulting product of this process is design requirements which form the basis of what will be designed and built.

The accelerator underground enclosures which are the first to be designed and constructed will be the Linac and the first segment of the collider.

Linac

The SSC Linear Accelerator or Linac, will be the first in a series of injector accelerators to be commissioned. The program schedule calls for turnover of the completed conventional construction (tunnel, gallery buildings, utilities and other supporting infrastructure) in early 1993 for accelerator system installation and commissioning.

The Linac underground conventional construction includes approximately 244 m (800 feet) of buried tunnel, with inside dimensions of 3.35 m (11 feet) wide by 3.05 m (10 feet) high to house the drift tube and coupled cell structures of the Linac. The cross-sectional dimensions are comparable to the Stanford Linear Accelerator Complex or SLAC. The design includes an enlarged source area which connects the tunnel to an adjacent 7.6 m (25 foot) wide by 152 m (500 foot) long surface equipment gallery running the length of the initial 600 MeV Linac. Additionally, there are numerous interconnecting conduit penetrations for cables.and radio-frequency waveguides.

The requirements for the design of the conventional construction were developed by an SSC task group consisting of accelerator scientists and engineers, safety and health staff, and civil construction engineers. This group specified the facility requirements, which form the basis of the civil design, reconciling these with the authorized budget. As might be expected, this process required considerable iteration and compromise.

Collider

Early milestones of the project schedule include availability of 100 m (330 feet) of collider tunnel for possible development of an underground magnet string test and availability of the first half sector of the collider to allow cool-down of the first cryogenic section. These schedule constraints require that collider tunnel construction begin in 1991 and continue to completion in early 1997.

Civil design of the first half sector of the collider is currently underway; however, to allow further maturing of the technical system design, the civil design and construction of underground enclosures is being approached in two phases. The first phase of work will include the basic tunnel and shafts which are essentially concrete lined shells. The second phase of work includes construction of electrical niches along the tunnel length and the finish out of the tunnel including installation of utility systems. Phasing of the work allows time for refinement of technical system design which will control niche layout and the utility system design.

Civil design of the collider tunnel was preceded by several studies of various components including the tunnel size and the configuration of shafts serving the collider tunnel. The need for these studies was identified through consideration of technical system needs.

Study of magnet installation procedures highlighted the need to consider providing additional floor space in the tunnel to allow efficient magnet installation. In response, civil construction studied the economic trade-offs between a 3.7 m (12-foot) diameter tunnel and 4.3 m (14 foot) diameter tunnel. Based upon some simplifying assumptions the results of the study indicated that the cost difference between these diameters was within the range of estimating accuracy. While larger diameter tunnels require more construction materials, the increase is offset by efficiencies possible because of increased working space within the tunnel which increases construction production rates. Therefore a decision was made to increase the diameter of the collider tunnel to 4.3 m (14 feet) without increasing the project cost. The collider tunnel cross section currently under design is shown in Figure 1.

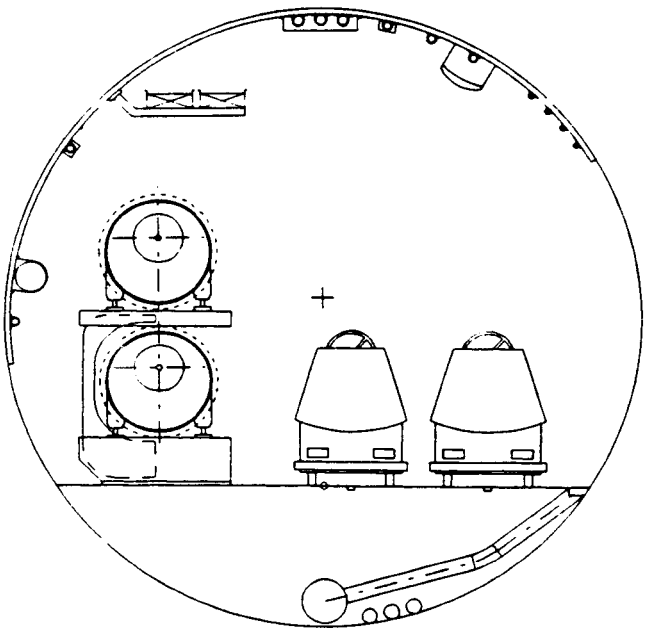

Figure 1. Collider Tunnel Cross Section

Another area of concern to both technical systems and civil construction is the configuration of shafts which will connect the collider tunnel to surface facilities. Early shaft concept development utilized single large diameter shafts ranging from 9 m (30 feet) to 17 m (55 feet). The 17 m (55 foot) diameter shaft which provides personnel access, utility conveyance, and magnet delivery capability to the collider tunnel is shown in Figure 2.

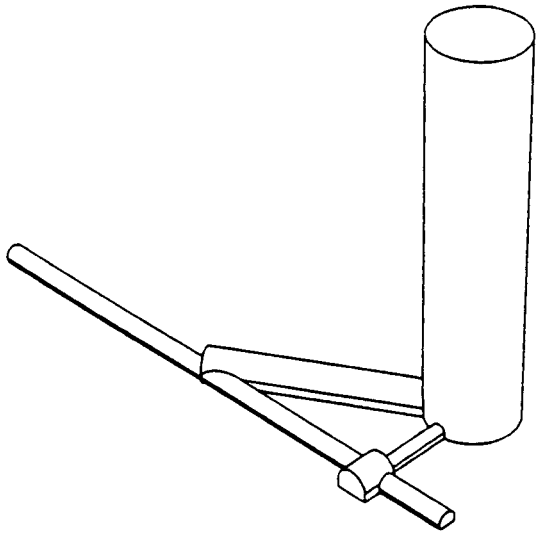

Figure 2. Early Magnet Delivery Shaft Concept

The well developed shaft drilling capabilities available in the State of Texas led to consideration of separating these three functions into three separate shafts. The current design utilizes the three shaft concept which includes two nominal 6 m (20 feet) shafts to provide personnel access in one and a utility corridor in the other. See Figure 3. Magnet delivery functions will be provided by elliptically shaped shafts capable of conveying the 15.8 m (52 feet) and 16.3 m (54 feet) long magnets into the collider tunnel. The cost impact of this change, like the tunnel diameter change, was believed to be within the range of estimating accuracy.

It should be noted that the three shaft concept has also provided additional flexibility in the location of magnet delivery points because they are no longer tied to cryogenic or power system feed locations. Flexibility will also be achieved in addressing safety concerns and avoiding joint occupancy of shafts during installation of civil utility and technical systems.

SUMMARY

The development of underground enclosure configurations necessarily begins with consideration of accelerator machine requirements. Communication between physics and civil construction personnel is key to development of solutions which have schedule and cost benefits to the project. Flexibility and compromise on the part of both parties must be recognized and allowed to occur to achieve civil design solutions.

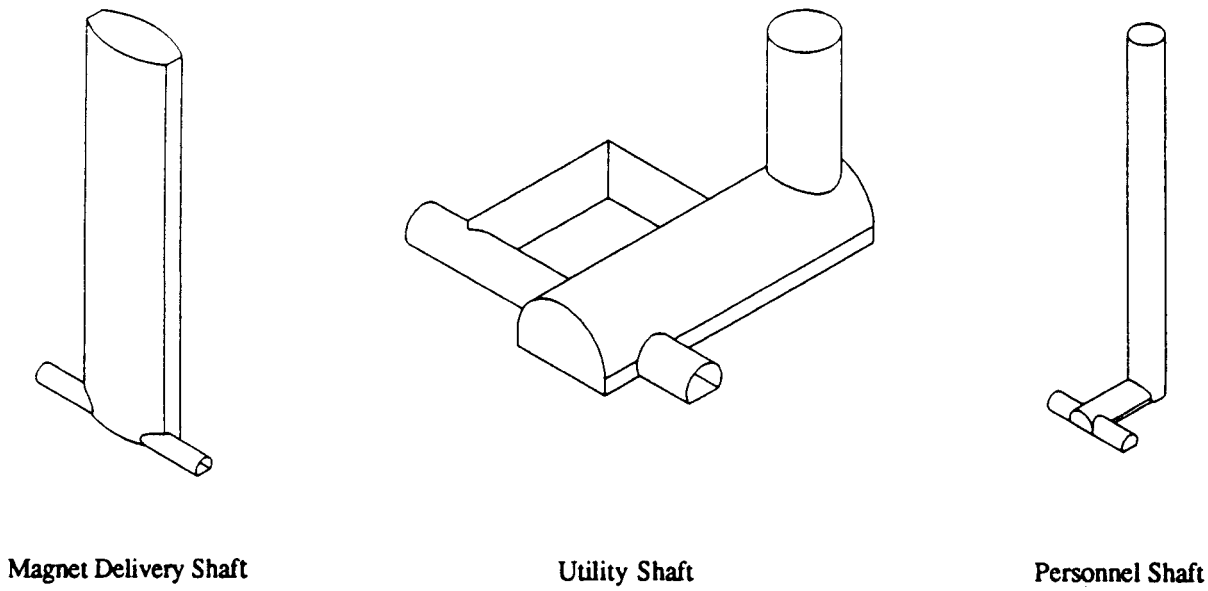

Figure 3. Three Shaft Concept

REFERENCES

[1] SSC Central Design Group, "Conceptual Design of the Superconducting Super Collider," operated by Universities Research Association under contract with the U.S. Department of Energy, March 1986.

[2] Superconducting Super Collider Laboratory, "Site-Specific Conceptual Design of the Superconducting Super Collider," J.R. Sanford and D.M. Matthews editors, operated by Universities Research Association under contract with the U.S. Department of Energy, July 1990.

[3] Nelson, P.P. and T.K. Lundin, "Geotechnical Characterization and Construction Methods for Tunnel Excavation of the Superconducting Super Collider (SSC) Project," *Proceedings of the International Symposium on Unique Underground Structures*, Denver, Colorado, June 1990,.