SSCL-452

SSCL-452

Superconducting Super Collider Laboratory

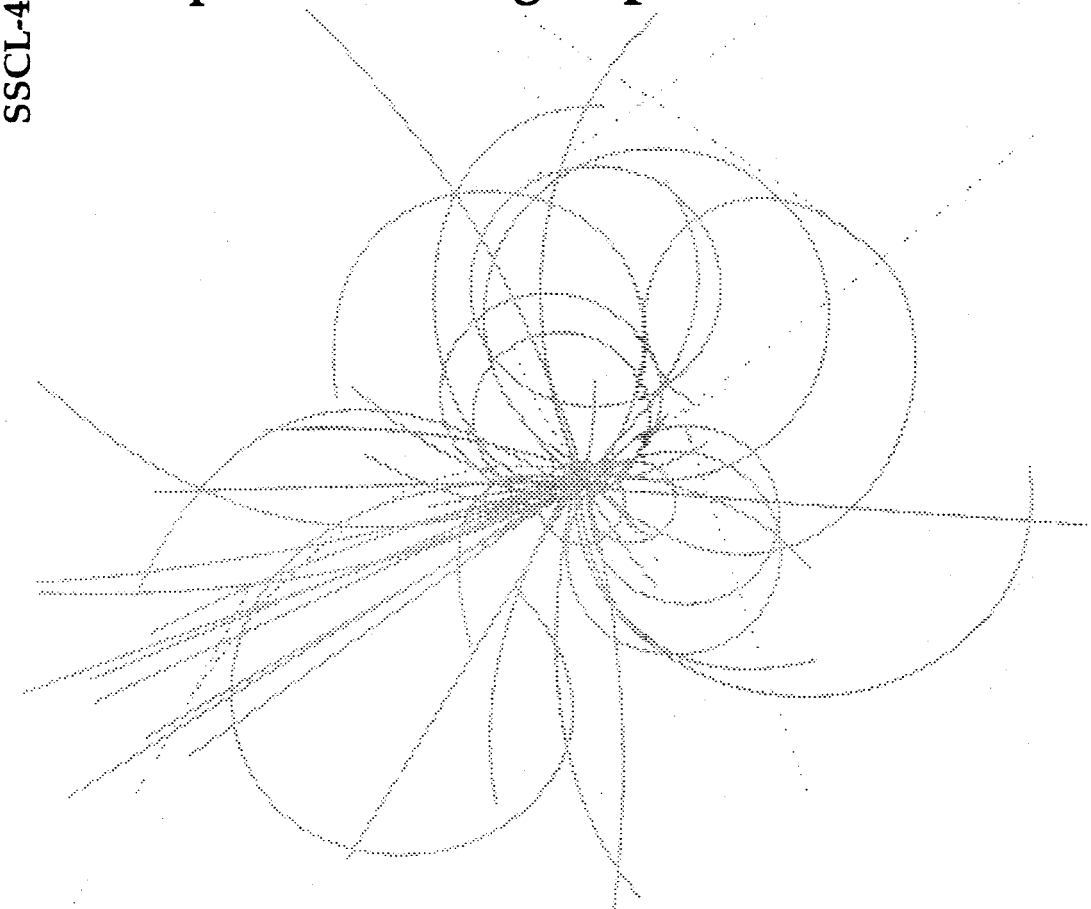

Sliding Mode Controller of RF Cavity Tuning Loop

L. K. Mestha and K. S. Yeung

May 1991

To be published as a conference record, IEEE, New York

SSCL-452

SLIDING MODE CONTROLLER OF RF CAVITY TUNING LOOP*

L. K. Mestha and K. S. Yeung

Accelerator Division
Superconducting Super Collider Laboratory†
2550 Beckleymeade Ave.
Dallas, TX 75237

May 1991

*Presented at the 1991 IEEE Particle Accelerator Conference, San Francisco, CA, May 6-9, 1991.

†Operated by the Universities Research Association, Inc., for the U.S. Department of Energy under Contract No. DE-AC02-89ER40486.

Sliding Mode Controller for RF Cavity Tuning Loop

L.K. Mestha
Superconducting Super Collider Laboratory*, Dallas, Texas 75237

K.S. Yeung
University of Texas, Arlington, Texas 76019

Abstract

Ferrite tuned cavities must operate under a wide range of accelerating frequencies. The tuning is done by modulating the current in the coil surrounding the ferrite. Feedback controllers are used to improve the tuning condition by sensing the phase error. The design of controllers currently in use is based on classical frequency domain techniques. Classical controllers in this application are sensitive to variations in the tuning system parameters. Also, these controllers generally fail to provide correct transient response when there is beam in the cavity, since the beam loading changes the transfer function of the system. We have designed a robust and adaptive controller based on sliding mode techniques for a cavity tuning system on the ISIS synchrotron. The techniques are extendable to other systems.

I. INTRODUCTION

The analogue tuning loop used on ISIS RF systems (Figure 1) was unable to provide the required accuracy. Hence a digital feedforward controller based on inverse transfer characteristic of the type shown in Reference 1 was used. The application of such a digital loop has also been proposed for TRIUMF cavities[2]. Stability of such a feedback loop is ensured by exact pole-zero cancellation, which is difficult to achieve in practice. Also the stability cannot be guaranteed at all operating conditions for all the tuning systems due to variations in system characteristics. Ideally, a stand-alone, self-correcting, intelligent feedback controller would be well-suited for the system. Such controllers can be designed in classical frequency domain or with the recently invented, more powerful time-domain approach such as adaptive or variable structure controllers. The advent of new techniques would allow us to include variation in tuning system conditions due to beam loading, since the beam effects on the cavity can be regarded as external disturbance.

The design of the time-domain controllers such as self-tuning or model reference adaptive controllers is not only complex, but the hardware implementation turns out to be more cumbersome. A controller based on variable structure principle such as the sliding mode has all the good features of the adaptive controllers, and the algorithm is not difficult to implement. The controller we have discussed needs information about the description of the transfer function model in terms of time, t, in linear state space form with variables $\{\underline{A}, \underline{b}, \underline{C}, D\}$ as system matrices, $u_i(t)$ the control signal, $y(t)$ the output signal, and $\underline{x}(t)$ the state variable matrix as follows:

$$\begin{aligned} \dot{\underline{x}}(t) &= \underline{A}\underline{x}(t) + \underline{b}u_i(t) \\ y(t) &= \underline{C}\underline{x}(t) + Du_i(t) \,. \end{aligned} \tag{1}$$

However, it is not very difficult to obtain system matrices once the frequency response characteristic is measured. Several techniques are shown in Reference 3. Since the controller is inherently insensitive to disturbance and to parameter variation – unlike the classical PID, phase lag, phase lead and state feedback – we expect to achieve good performance when the beam is injected in the machine. At the end of this paper a schematic layout of an analogue implementation is shown which can be interfaced to Figure 1 to the output of the function generator.

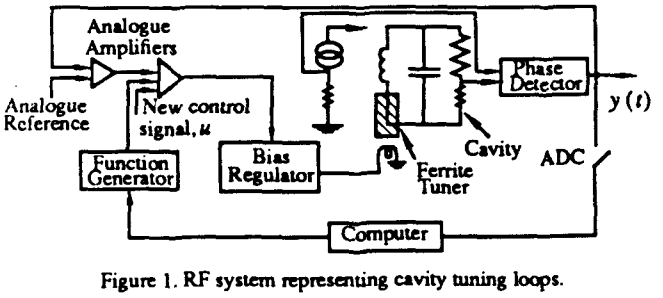

Figure 1. RF system representing cavity tuning loops.

II. SYSTEM MODEL

The cavity tuning model shown in Reference 3 for Figure 1 was obtained in z-domain and was of the 7th order. It was then converted to continuous time-domain state-space form of the type shown in Equation 1 by using a sampling period of 10μs which was used at the time of measurement. Since we observed some pole-zero cancellation in the 7th order model of the system, we used the standard model order reduction routines of Reference 4 by looking at the weightage on the Gramian vectors. Finally, we arrived at a 3rd order state space model. To check the validity of the 3rd order model a step response of the 7th order discrete domain transfer function model was compared with the reduced 3rd order continuous domain state space model. The agreement was found to be very good. Hence the controller with a reduced 3rd order model was designed.

III. SLIDING-MODE CONTROLLER DESIGN

The system Equation 1 can be rewritten with the individual elements and is shown in Equations 2 and 3 below.

$$\begin{bmatrix} \dot{x}_1 \\ \dot{x}_2 \\ \dot{x}_3 \end{bmatrix} = \begin{bmatrix} a_{11} & a_{12} & a_{13} \\ a_{21} & a_{22} & a_{23} \\ a_{31} & a_{32} & a_{33} \end{bmatrix} \begin{bmatrix} x_1 \\ x_2 \\ x_3 \end{bmatrix} + \begin{bmatrix} b_1 \\ b_2 \\ b_3 \end{bmatrix} u_i(t) \tag{2}$$

*Operated by Universities Research Association, Inc.,
U.S. Department of Energy, Under Contract No. DE-AC02-89ER40486.

$$y(t) = \begin{bmatrix} c_1 & c_2 & c_3 \end{bmatrix} \begin{bmatrix} x_1 \\ x_2 \\ x_3 \end{bmatrix} + D u_i \qquad (3)$$

The variables x_1, x_2 and x_3 are time varying functions called internal states of the system. In our cavity tuning problem they can be estimated. A brief discussion of this is given later. These estimated states are used in the controller to obtain the control signal. The control signal u_i can be assumed to have two inputs, u and Δu_d, where u is the signal generated by the controller and Δu_d the input disturbance:

$$u_i(t) = u(t) + \Delta u_d(t) \ . \qquad (4)$$

Using the estimated states a time dependent sliding variable S is defined as follows:

$$S = \begin{bmatrix} g_1 & g_2 & g_3 \end{bmatrix} \begin{bmatrix} x_1 \\ x_2 \\ x_3 \end{bmatrix} = \underline{g}^T \underline{x} \ . \qquad (5)$$

The components g_1, g_2 and g_3 of the matrix $\underline{g}^T$ are assumed to be known at this stage. However, later in this paper we discuss briefly a method to calculate them. To design a stable feedback loop we need to choose a suitable, positive definite Lyapunov function. In this particular case we can use the function as

$$V(t) = \frac{1}{2} S^2 \ . \qquad (6)$$

For global stability the Lyapunov function, V, must be positive definite, and its first derivative, $\dot{V}$, must be less than zero. In other words,

$$S\dot{S} < 0 \ , \qquad (7)$$

where $\dot{S}$ is the time-derivative of Equation 5 and is given by

$$\begin{aligned} \dot{S} &= \underline{g}^T \{ \underline{A}\underline{x} + \underline{b}(u + \Delta u_d) \} \\ &= \underline{g}^T \begin{bmatrix} \underline{a}_1 & \underline{a}_2 & \underline{a}_3 \end{bmatrix} \underline{x} + \underline{g}^T \underline{b} (u + \Delta u_d) \\ &= \begin{bmatrix} \alpha_1 & \alpha_2 & \alpha_3 \end{bmatrix} \begin{bmatrix} x_1 \\ x_2 \\ x_3 \end{bmatrix} + \beta (u + \Delta u_d) \ , \end{aligned} \qquad (8)$$

with

$$\underline{a}_1 = \begin{bmatrix} a_{11} \\ a_{21} \\ a_{31} \end{bmatrix}, \quad \underline{a}_2 = \begin{bmatrix} a_{12} \\ a_{22} \\ a_{32} \end{bmatrix}, \quad \underline{a}_3 = \begin{bmatrix} a_{13} \\ a_{23} \\ a_{33} \end{bmatrix}, \quad \begin{aligned} \alpha_i &= \underline{g}^T \underline{a}_i \\ i &= 1, 2, 3 \\ \beta &= \underline{g}^T \underline{b} \ . \end{aligned} \qquad (9)$$

We can split the parameters, α_1, α_2, α_3, and β into the nominal parameters, $\alpha_1{}^\circ$, $\alpha_2{}^\circ$, $\alpha_3{}^\circ$, and β° and unknown parameters, $\Delta\alpha_1$, $\Delta\alpha_2$, $\Delta\alpha_3$, and $\Delta\beta$ as follows:

$$\begin{aligned} \alpha_i &= \alpha_i{}^\circ + \Delta\alpha_i \ \Big| \ i = 1, 2, 3 \\ \beta &= \beta^\circ + \Delta\beta \ . \end{aligned} \qquad (10)$$

The nominal parameters were calculated using the measured system matrices $\{\underline{A}, \underline{b}\}$ and the matrix $\underline{g}^T$ of the controller. The unknown parameters are associated with the amount of system uncertainties excluding the disturbance signal. Also, let the control law, u, calculated by the controller, be divided into two parts: the continuous part, u_c, and the switching part, u_s. The continuous part will hold the tuning phase error zero under ideal plant conditions; at the same time the switching part will drive the phase error zero whenever there is uncertainty. Thus

$$u = u_c + u_s \ . \qquad (11)$$

The control signals u_c and u_s are designed such that the Lyapunov stability condition dictated by Equation 7 is satisfied under the normal operating conditions. Also the control signals must not exceed the upper limits set by the bias regulator. Since u_c is used as the control function for the continuous part, we can group all the nominal parameters as follows:

$$u_c = -\frac{1}{\beta^\circ} \sum_{i=1}^{3} \alpha_i{}^\circ x_i \ . \qquad (12)$$

Substituting Equations 10, 11 and 12 into Equation 8 and rearranging, we obtain

$$\dot{S} = \beta u_s + \beta \Delta u_d + \sum_{i=1}^{3} \left(\Delta\alpha_i - \frac{\Delta\beta}{\beta^\circ} \alpha_i{}^\circ \right) x_i \ . \qquad (13)$$

The switching part of the control signal, u_s, is arranged with gains to overcome the uncertainties as follows:

$$u_s = -[k_1|x_1| + k_2|x_2| + k_3|x_3| + k_0] \operatorname{sgn} S \ . \qquad (14)$$

The function $\operatorname{sgn} S$ in Equation 14 is the *signum* function which has a value either +1 or -1 when $S \geq 0$ and $S < 0$, respectively. The constants, k_0, k_1, k_2, k_3 are selected such that Equation 7 is always satisfied. Clearly, with the following conditions on the gains, we can keep the loop stable if

$$\begin{aligned} k_i &> sup \left| \frac{1}{\beta} \left(\Delta\alpha_i - \frac{\Delta\beta}{\beta^\circ} \alpha_i{}^\circ \right) \right| \quad i = 1, 2, 3 \\ k_0 &> |\Delta u_d| \ . \end{aligned} \qquad (15)$$

The abbreviation *"sup"* used in Equation 15 is pronounced as *"supremum"* to represent the maximum value of the function. If the system parameters $\{\underline{A}, \underline{b}\}$ were accurately measured and if the variation due to temperature or other unknown effects is ignored, then the gains k_1, k_2 and k_3 can be set to zero. Whereas the gain k_0 is still required to handle the input disturbance, Δu_d, when the beam is turned on. The choice of these gains gives different weightings to the cost of control. Precise values can be set by actually working on the system. Also, when the feedback gains, $k_0 \rightarrow k_3$, are zero in Equation 14, then u_s is zero. Under this condition the control signal is $u = u_c$, obtained by solving Equation 12, which appears like a linear state feedback controller. Since this type of controller may give oscillatory control signal, a saturation function could be defined in place of $\operatorname{sgn} S$. It is defined with a constant δ such that $\operatorname{sgn} S = 1$ for $S > \delta$, $\operatorname{sgn} S = -1$ for $S < -\delta$, and $\operatorname{sgn} S = S/\delta$ for $\delta \geq S \geq -\delta$.

IV. ESTIMATION OF THE STATES

From the previous section we noted that the required control signal, u, can be generated by solving Equations 5, 11, 12, and 14. We can do this provided the internal states, x_1, x_2 and x_3 are known. In our problem they must be estimated. The state estimator is known as the "observer". We use the output signal, $y(t)$, and the input signal, $u_i(t)$, and obtain a standard Luenberger observer. A simple design technique is discussed by

Kailath[5]. Hence, we simply quote the equation below:

$$\dot{\hat{x}} = \underline{A}\hat{x} + \underline{b}u_i + \underline{m}[y - \underline{C}\hat{x}] - \underline{m}Du_i \qquad (16)$$

Where, $\hat{x}$ is the estimated state vector used to calculate the sliding variable, S, and $\underline{m}$ is the feedback gain vector. This gain vector is obtained from the system parameters, $\{\underline{A}, \underline{C}\}$, and an arbitrary set of eigenvalues[5]. As a rule of thumb, the eigenvalues of the observer are chosen such that the observer states converge to actual values almost 10 times faster than the controller eigenvalues corresponding to g_1, g_2, and g_3. For designing the observer we have assumed that the input signal, $u_i(t)$, is measurable, meaning the disturbance signal, Δu_d, is accessible. In other words, Equation 16 will not estimate the states accurately when the beam comes on and hence may give problems, especially when the eigenvalues are chosen close to the controller. Further work is underway to overcome the observer defects.

For overall stability the eigenvalues of the observer and controller must be negative. The $\underline{g}$ matrix for the controller is selected by trial and error method or by using eigenvalue assignment technique shown in Reference 6. In both cases the equivalent closed loop system, described by

$$\dot{\underline{x}} = [\underline{A} - \underline{b}(\underline{g}^T\underline{b})^{-1}\underline{g}^T\underline{A}]\underline{x}, \qquad (17)$$

must have negative eigenvalues for stability. Equation 17 is obtained by substituting the condition[7] $\dot{S} \equiv 0$ in Equation 8 and using the resulting expression for the equivalent control signal, u_i, in Equation 1. When $\dot{S} \equiv 0$ one of the eigenvalues of Equation 17 is zero[6]. Hence, for our system we specify only two eigenvalues, λ_1 and λ_2, and ignore the third. The $\underline{g}$ matrix is then obtained from the following equation:

$$\underline{g}^T = \underline{q}^T\alpha(\underline{A}), \qquad (18)$$

where the function $\alpha(\underline{A}) = (\underline{A} - \lambda_1)(\underline{A} - \lambda_2)$, and the matrix, $\underline{q}^T$ is equal to the last row of the inverse of the controllability matrix of the system (Equation 1), and the symbol T is used to signify the tranpose of the matrix.

V. IMPLEMENTATION AND SIMULATION

The feedback loop can be implemented, as always, in two ways, using analogue or digital circuits. A schematic layout for analogue implementation is shown in Figure 2. The controller implementation would require a multiplexer to determine the sign change in the sliding variable. For digital implementation, a DSP chip, TMS320C30, from Texas Instruments with a 32-bit floating point multiplication and accumulation time of 60ns can compute the control signal in under 5 μs, in real time.

We have simulated the loop performance with the controller at 5 μs sampling rate in Figure 3, with a step disturbance signal of $\Delta u_d = +0.1$ V between 5 ms and 10 ms. Various parameters are shown in Figure 3. A saturation function with $\delta = 1 \times 10^{-6}$ is used in place of sgn$S$. Clearly the output transients are controlled under less than 0.4°. At this stage it is recalled that the switching part of the control signal must not be made zero; otherwise the output of the system will become unbounded. This is because one of the eigenvalues of Equation 17 is close to zero. Also, the controllability matrix of the system is observed to be very close to singularity. Hence all the feedback parameters must be carefully chosen.

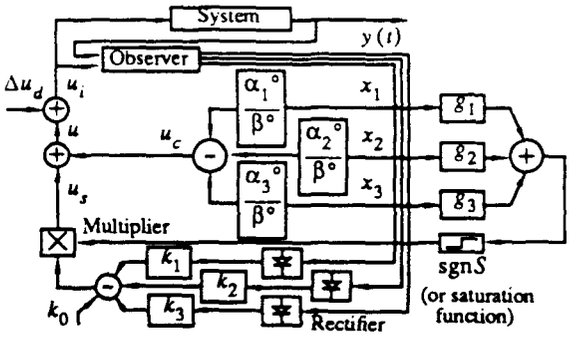

Figure 2. Analogue implementation of the sliding mode controller

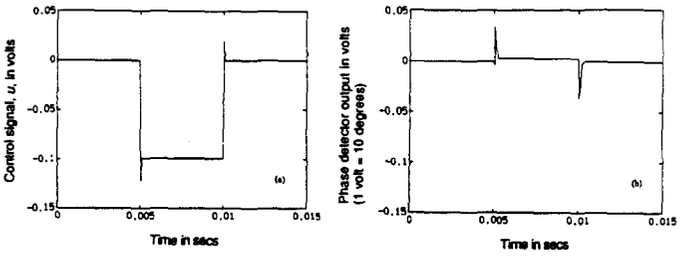

$$\lambda_{Observer} = [-25\ -50\ -75] \times 10^4$$

$$\lambda_{Controller} = [-25\ -250\ 0] \times 10^3 \qquad \underline{g} = \begin{bmatrix} 5.61223 \\ 19.90693 \\ -1.02001 \end{bmatrix} \times 10^{-3}$$

$$k_0 = 0.11, k_1 = 200, k_2 = 100, k_3 = 200$$

Figure 3. (a) Control signal, u, and (b) the phase error signal, y, under a step disturbance, $\Delta u_d = 0.1$ V.

VI. CONCLUSIONS

We have shown a modern control technique to design a robust feedback controller such as the "sliding-mode" starting from an experimental "Bode diagram" of the system. We retain all the simplicity of the state feedback controller and add robustness to handle variation in tuning errors due to beam loading or other uncertainties on the system. Although the controller is robust, a non-robust state estimator may give problems unless the eigenvalues are carefully selected.

VII. ACKNOWLEDGEMENTS

Authors wish to thank C.M. Kwan from U.T. Arlington for his contribution to the simulation.

VIII. REFERENCES

[1] L.K. Mestha, "Digital Feedback Control for Radial Beam Position", RAL Report No. RAL-84-031, April 1984.

[2] S.T. Craig et al., "RF Field Control for Kaon Factory Booster Cavities", Chalk River Lab., AECL-10312, Nov. 1990.

[3] L.K. Mestha et al., "Application of System Identification Techniques to an RF Cavity Tuning Loop", European Particle Accelerator Conference, Nice, June 12-16, 1990.

[4] MATLAB User's Guide, The Math Works Inc., USA, 1989.

[5] T. Kailath, Linear Systems, Prentice Hall, Inc, 1980.

[6] K.S. Yeung et al., "An Eigenvalue Assignment Scheme for the State Feedback and The Sliding Mode Feedback of Multivariable System", IEEE Trans. on Automatic Control (Under Review).

[7] U.Itkis, Control Systems of Variable Structure, John Wiley & sons, New York, 1976.