SSCL-431

SSCL-431

Superconducting Super Collider Laboratory

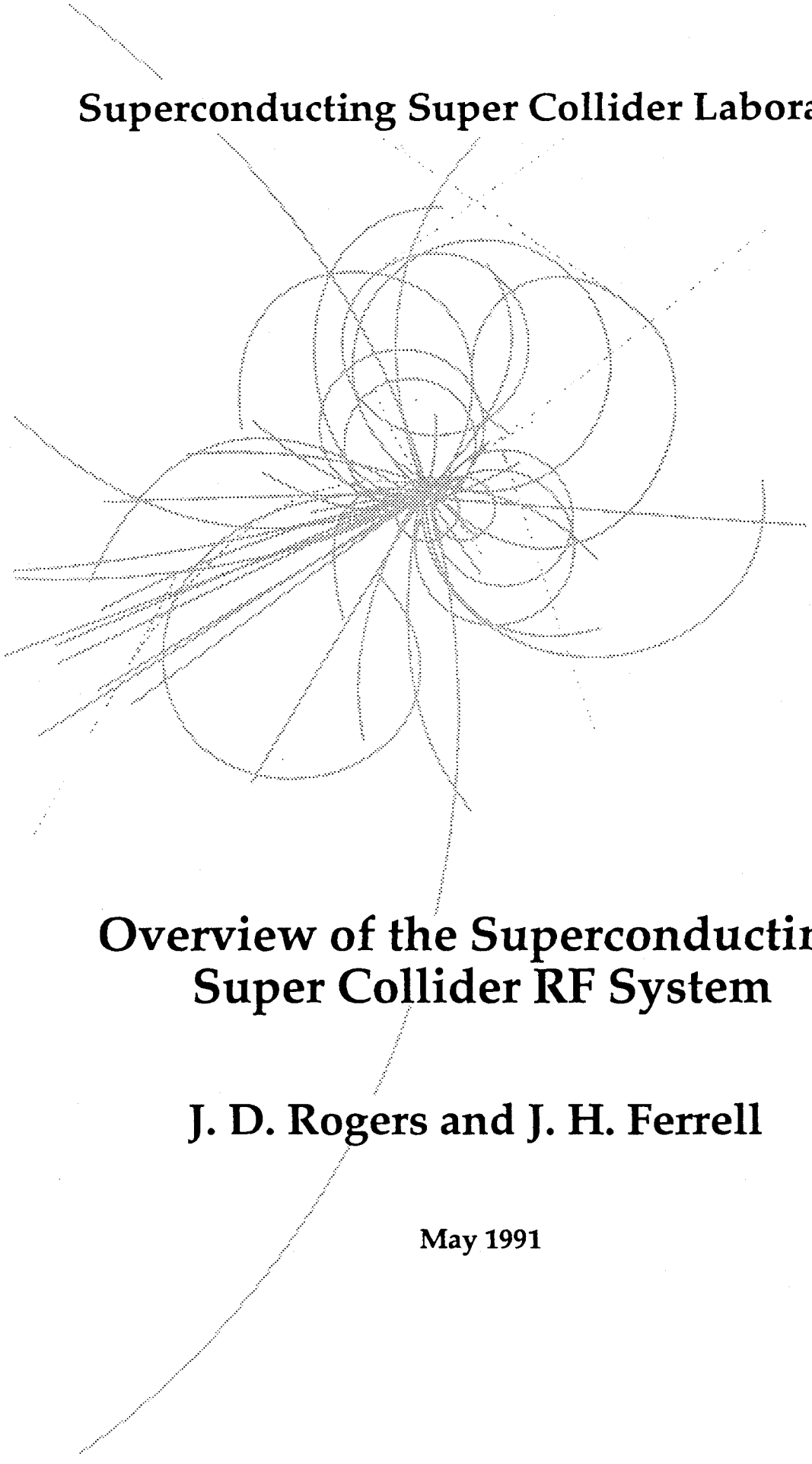

Overview of the Superconducting Super Collider RF System

J. D. Rogers and J. H. Ferrell

May 1991

To be published as a Conference Record, IEEE, New York

SSCL-431

Overview of the Superconducting Super Collider RF System*

J. D. Rogers and J. H. Ferrell

Accerlerator Division
Superconducting Super Collider Laboratory†
2550 Beckleymeade Ave.
Dallas, TX 75237

May 1991

*Presented at the 1991 IEEE Particle Accelerator Conference, San Francisco, CA, May 6–9, 1991.

†Operated by the Universities Research Association, Inc., for the U.S. Department of Energy under Contract No. DE-AC02-89ER40486.

Overview of the Superconducting Super Collider RF Systems

Jimmy D. Rogers and Jim H. Ferrell
Accelerator Division
Superconducting Super Collider Laboratory*
2550 Beckleymeade Avenue
Dallas, Texas 75237

Abstract

The SSC will have a linear accelerator (Linac) and five synchrotron systems (three booster synchrotrons plus two main synchrotron rings which constitute the collider). The Linac consists of three major accelerating systems (an RF Quadrupole (RFQ), a Drift Tube Linac (DTL) and a Side Coupled Cavity Linac (CCL)), plus buncher and compressor systems. The various Linac structures will be driven by solid-state, tetrode, and klystron amplifiers at power levels that range from less than a 1 kW to 15 MW peak power. The three booster synchrotron RF systems will utilize a multiplicity of high power VHF 160 KW tetrode amplifiers, whereas the collider RF systems will utilize four 360-MHz, 1-MW cw klystrons. The RF systems include DC power supplies, local control and monitoring systems, and accelerating cavities, as well as the RF amplifiers.

The system requirements and conceptual designs for the RF systems for the Linac and the five SSC synchrotrons are presented. The status of the Linac RF systems and the Low Energy Booster Synchrotron accelerating cavity and ferrite tuner development programs are specifically addressed.

I. LINAC

The SSC Linac is comprised of two ion sources, each with its associated Radio Frequency Quadrupole and buncher, followed by two bunchers, a four tank drift tube Linac, two more bunchers, a ten-module-coupled cell Linac, and a compressor (located in the transfer line between the Linac and Low Energy Booster). The RF system for the Linac operates at a frequency of 427.617 MHz through the DTL and at 1282.851 MHz for the following bunchers, coupled cell Linac, and compressors. RF voltage stability requirements are $\leq$ 0.5% in amplitude and $\leq$ 0.5 ° in phase. The pulse repetition rate is 10 Hz (1 to 10 Hz capability) with RF pulse lengths from 50 µsecs to 100 µsecs depending on the fill time of the cavities. Table 1 describes the Linac RF system as presently envisioned.

II. BOOSTER RF REQUIREMENTS

The SSC booster synchrotrons—low energy (LEB), medium energy (MEB), and high energy (HEB)—RF systems requirements are summarized in Table 2.

Table 2
Booster RF Systems Requirements

	LEB	MEB	HEB
Frequency (MHz)	47.51 - 59.78	59.78 - 59.96	59.96
Pulse Length	50 msec.	4.5 sec.	100 sec.
Duty Factor	50%	67%	67%
Number of Cavities	8	12	7
Cavity Gap Voltage	(KV)		
Normal	91	175	229
Extended	121	210	267

III. LOW ENERGY BOOSTER RF SYSTEMS

A simplified block diagram of one LEB RF Amplifier System is shown in Figure 1. The total LEB accelerating voltage will be provided by six or more such RF Systems. Each ferrite tuned RF cavity is driven by a gridded vacuum tube amplifier which attaches directly to the accelerating cavity. The cavity serves as the resonant high Q tank circuit

Table 1
LINAC RF Requirements

System	Peak Power Required	Amplifier Peak Power Capability	Amplifier Type
RFQ (2 req.)	419 KW	600 KW	Tetrode
Buncher #1 (2 req.)	22.5 KW	30 KW	Gridded Tube or Solid State
Buncher #2	13.3 KW	20 KW	Gridded Tube or Solid State
Buncher #3	0.8 KW	2 KW	Gridded Tube or Solid State
DTL (4 req.)	< 3 MW	4 MW	Klystron, Cathode Modulated
Buncher # 4	125 KW	200 KW	Klystron or derived from First CCL
Buncher #5	250 KW	400 KW	Klystron or derived from First CCL
CCL (10 req.)	< 15 MW	0 MW	Klystron, Cathode Modulated
Compressor	50 KW	100 KW	Klystron, Cathode Modulated

*Operated by the Universities Reasearch Association, Inc., for the U.S. Department of Energy under Contract No. DE-AC02-89ER40486.

that all MEB requirements will be met with only 10 systems operational.

Preliminary cost estimates for the MEB cavity and tuner were based on the Fermilab main ring cavity, shown in Figure 3, but preliminary design has just begun. Effort is also underway to evaluate the feasibility of adding either second or third harmonic RF systems to produce the equivalent of a flat-topped sinewave (see Figure 4) during transition. Depending on the outcome of these studies, the number of fundamental frequency systems could be reduced.

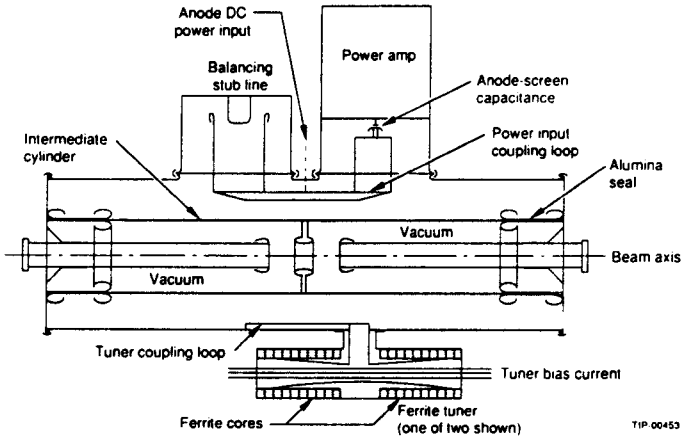

Figure 3. Fermilab Main Ring Cavity.

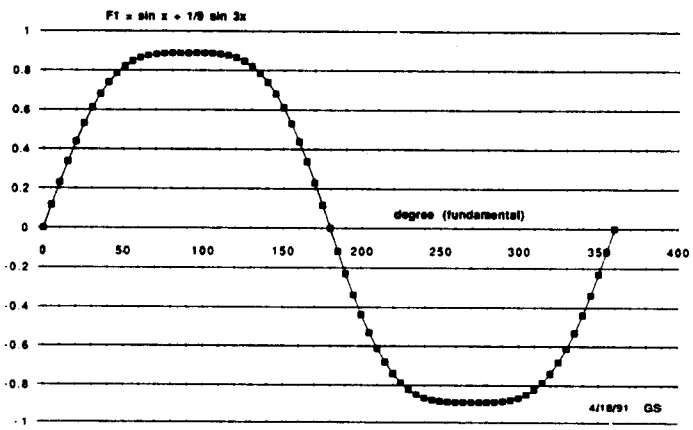

Figure 4. MEB RF Waveform During Transition.

VI. HIGH ENERGY BOOSTER RF SYSTEM

As presently planned, the total accelerating ring voltage of 1600 kV will be provided by seven 160-kw RF systems very similar to the MEB fundamental RF systems. One difference is that the final RF amplifiers will be located an integral number of half-wavelengths from the accelerating cavities in a radiation-free environment. This arrangement is possible because the tuning range is almost negligible.

In normal operation each of the seven systems will be delivering a peak accelerating gap voltage of 229 kV. The systems will be designed to deliver 267 kV per cavity voltage with any one system inoperable. The HEB RF System is in the conceptual phase. Preliminary design has not yet begun.

VII. COLLIDER RF SYSTEMS

The RF systems for the two Collider synchrotrons are essentially identical. The RF requirements for each of the two synchrotrons are given in Table 3.

Table 3
Collider RF System Requirements

Frequency	360 MHz
Duty	100%
Peak Circumferential Voltage Per Ring	20 MV
Accelerating Voltage Per Turn	5.3 MV

The preliminary conceptual design calls for the total RF power to be provided by four 360-MHz, 1-MW cw klystrons, two per synchrotron. The power from each klystron will be divided (Figure 5) and will deliver equal power to each of four cavities. The klystrons are approximately 16 ft long and will be located in an RF gallery approximately 200 ft underground along with most of the other RF components. The RF requirements and conceptual design are being reviewed.

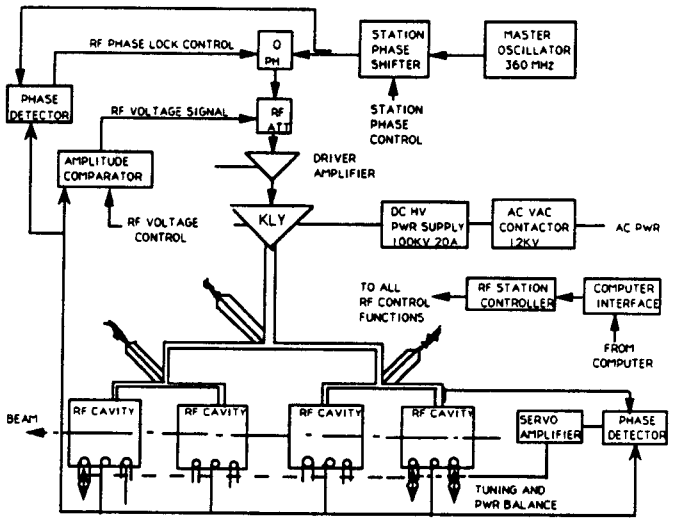

Figure 5. Collider RF System Simplified Diagram.

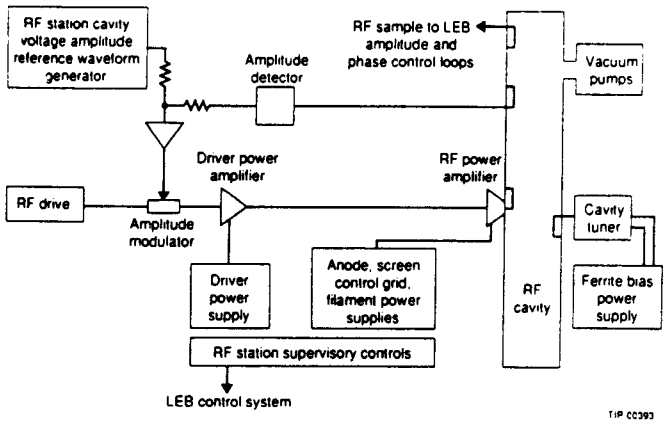

Figure 1. LEB RF System.

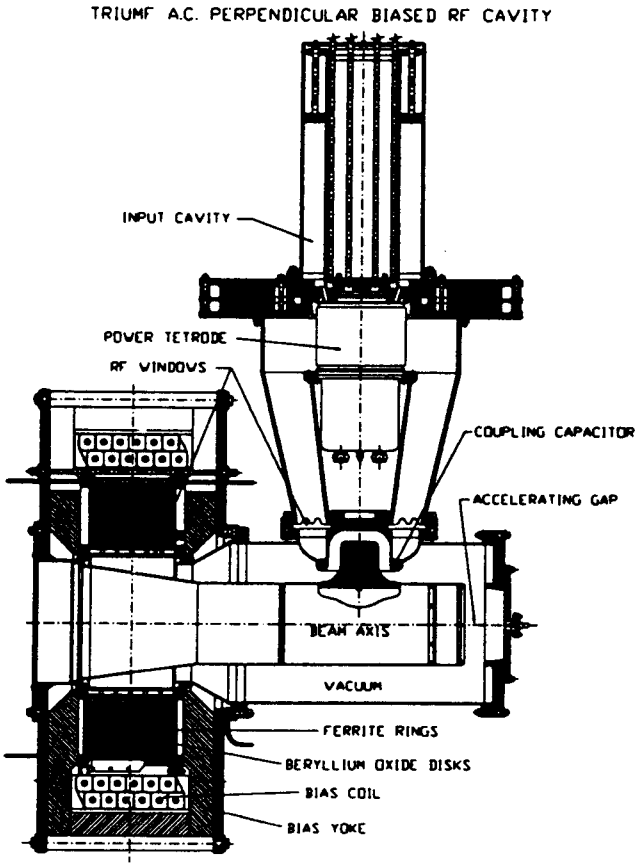

Figure 2. TRIUMF Cavity and Tuner.

for the amplifier. The RF accelerating cavity is tuned by varying the bias current to a perpendicularly biased yttrium-iron-garnett ferrite tuner. Depending upon the final tuner design, the bias supply could require maximum voltages in the range of 60-120 V and currents up to 1500 A with a di/dt of 40 kA/sec. It will be necessary to vary the cavity resonant frequency at rates as high as 1 to 3 GHz/sec. The ferrite bias current will be controlled by a preprogrammed wave shape and feedback control loops. The final amplifier is driven by a solid state RF amplifier. The RF phase and amplitude will be controlled by fast feedback circuits.

The design goal is to achieve the specified ring voltage with six RF cavities; eight will be used to achieve the desired reliability. For a ring voltage of 725 kV, operation with six cavities will require 121 kV per cavity. No operational system to date has cavities that tune 47.5–60 MHz and also produce 121 kV. TRIUMF is in the process of developing a cavity with a slightly larger tuning range and a maximum operating peak voltage of 62.5 kV. The TRIUMF cavity/tuner shown in Figure 2 shows six perpendicularly biased G-810 yttrium-iron-garnet ferrite rings separated and cooled by beryllium oxide disks. SSC plans to use four ferrite rings, eliminate the beryllium oxide, and use flourinert FC77 as the dielectric and coolant, thereby eliminating corona, reducing the electric field and losses in the ferrite, and improving ferrite cooling.

Calculations indicate that reliable operating voltages in excess of 121 kV can be achieved with this design. Even so, because the desired voltage with such a wide tuning range is much greater than the present state of the art, room is being left in the LEB accelerator lattice for additional cavities should they become necessary.

IV. Status of LEB Cavity and Tuner Development Program

Numerous cavity/tuner design concepts were investigated by SSC personnel and by consultants and personnel from other laboratories. An LEB cavity/tuner design workshop was held February 5-8, 1991, at the SSC Laboratory. Six different designs in varying stages of development were presented for review. The review team, comprised of 10 engineers and physicists from outside the SSC, recommended that highest priority be placed on a design presented by C. C. Friedrichs of LANL and B. M. Campbell of SSC. Their design is the one described above.

SSC has an RF test stand that will be used for testing the LEB cavity and tuner. We have a cavity that was developed by LANL which is driven by an EIMAC 4CW 150,000E tetrode. We plan to use the cavity to test tuner concepts.

V. Medium Energy Booster RF Systems

The LEB and MEB RF systems are very similar, the primary difference being the tuning range, tuner bias supply, and cavity accelerating gap voltage. As presently planned, the MEB cavities must provide 2100 kV total or 175 kV per cavity when 12 systems are operational. However, the systems will be designed and tested for 210 kV per cavity so