SSCL-403

Superconducting Super Collider Laboratory

SSCL-403

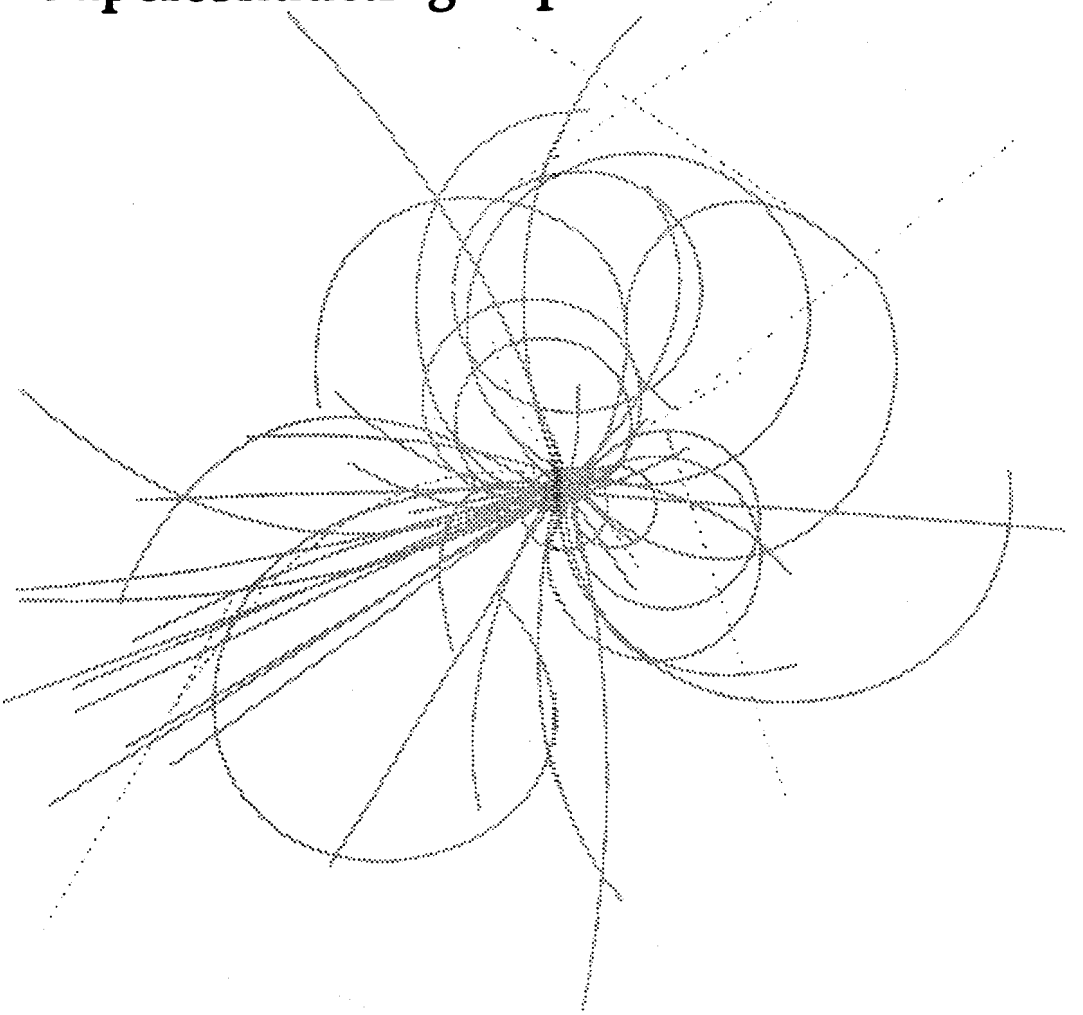

# Resolutions to Difficulties Experienced in SSC Cable Fabrication During the Initial Scale-up Period

R. Hannaford, D. Christopherson, and B. Remsbottom, et al.

September 1990

SSCL-403

# Resolutions to Difficulties Experienced in SSC Cable Fabrication During the Initial Scale-up Period*

R. Hannaford, D. Christopherson, and B. Remsbottom

Magnet Division
Superconducting Super Collider Laboratory†
2550 Beckleymeade Ave.
Dallas, TX 75237

and

M. Boivin

New England Electric Wire Corp.
Lisbon, New Hampshire 03585

September 1990

*Submitted to the Applied Superconductivity Conference, Snowmass, Colorado, September 24–28, 1990.
†Operated by the Universities Research Association, Inc., for the U.S. Department of Energy under Contract No. DE-AC02-89ER40486.

# RESOLUTIONS TO DIFFICULTIES EXPERIENCED IN SSC CABLE FABRICATION DURING THE INITIAL SCALE-UP PERIOD

Roy Hannaford, Denis Christopherson, Bob Remsbottom,
Superconducting Super Collider Laboratory
2550 Beckleymeade Avenue
Dallas, Texas 75237

Mike Boivin
New England Electric Wire Corp.
Lisbon, New Hampshire 03585

## Abstract

Late in 1988, a prototype high speed cable machine was built by industry and delivered in FY88 for the Superconducting Super Collider (SSC) [1], and delivered to New England Electric Wire Corp. for the fabrication of SSC cable. This cabling machine has produced the majority of the cable needed for the SSC Dipole Program. During the past year and a half we have experienced several cabling difficulties that were not seen previously [2]. These difficulties were due to new techniques and equipment relating to the high speed production of cable meeting SSC specifications. These difficulties included mandrel alignment, Turk's-head roller alignment, and Turk's-head drive equipment. The solution to these problems are discussed with the SSC specification in detail.

## Introduction

The SSC has a unique cabling machine equipped with a power driven Turk's-head which is designed to produce Rutherford-type cable at 10 meters/minute. Power driven Turk's-heads are not unique to industry and are used routinely for rolling monolithic material. However, they are unique to multistrand Rutherford-type cable lines. This power Turk's-head had both the top and bottom rollers geared together through a 1:1 gearbox and driven with an electric motor. There have been several upgrades to the power Turk's-head in the past few months. These upgrades were due to problems that have arisen in a few of the production cable runs. These particular problems seemed to be exclusive to this machine.

## Difficulties Experienced

There were two main difficulties experienced during the initial start-up period. Copper slivers were observed between strands, and surface cracks on the major edge of the cable were found, which resulted in filament damage. The copper slivers between strands were caused by the slightly different surface speeds of the top and bottom rollers. Both rollers are power driven and geared together. A slight difference in diameter between these rollers apparently resulted in different surface velocities. This caused the strands on the bottom of the cable to be in compression, and the strands on the top of the cable to be in tension. When the strands on the bottom come off the mandrel and go into compression, they go out of phase ( not side by side ). They are then compacted and forced back into phase, which acts as a shearing force resulting in copper slivers between the strands, represented in Figs.1, 2, and 3.

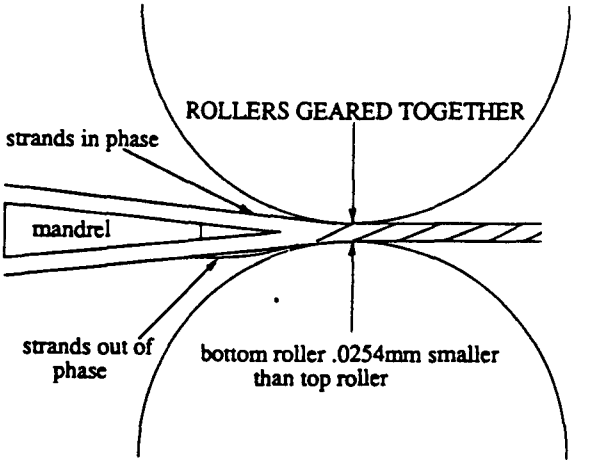


Fig. 1. Rollers of different diameters run at different surface speeds when they are geared together.

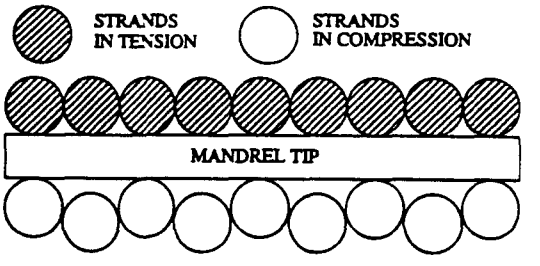


Fig. 2. Wires on the bottom go into compression as they come off the mandrel tip, due to the bottom roller running slower.

This condition was corrected by disconnecting the top drive shaft and letting the top roller " free wheel " and travel at the same surface speed as the bottom roller.

During the initial start-up period, there were cracks observed on the major edge of several cables as shown in Fig. 4. These cracks were caused by the side roller on the major edge being misaligned. The wide side roller contacted the top roller at a point whereby the side roller had a slower surface speed than the passing cable. As a result, the cable was stretched and occasionally cracked along the major edge. This improper setup is shown schematically in Fig. 5.

Fig. 3. Micrograph cross-section of cable revealing copper sliver between strands.

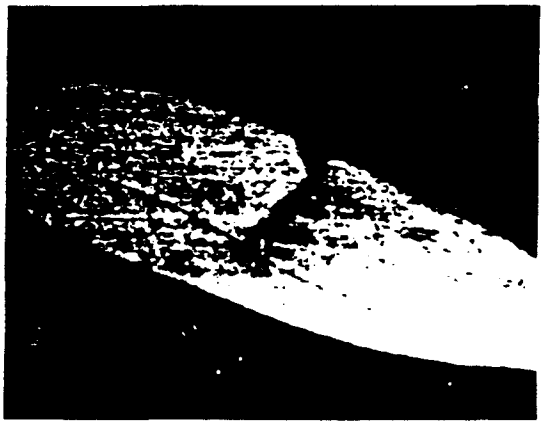

Fig. 4. Cracks observed on the major edge of a damaged cable.

ROLLER MISALIGNMENT

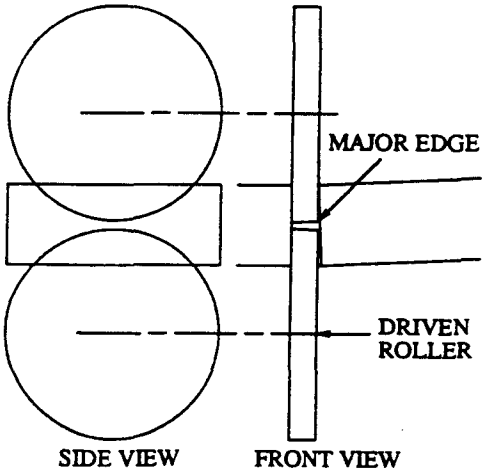


Fig. 5. Before modification (side roller misalignment)

The side roller was running slower than the other rollers, stretching the strand at the major edge as it was being sized. Both of the side rollers were removed and a relief was ground into either side of the rollers, leaving a 12.7 mm land in the middle of the rollers, as shown in Fig. 6.

ROLLER MODIFICATION

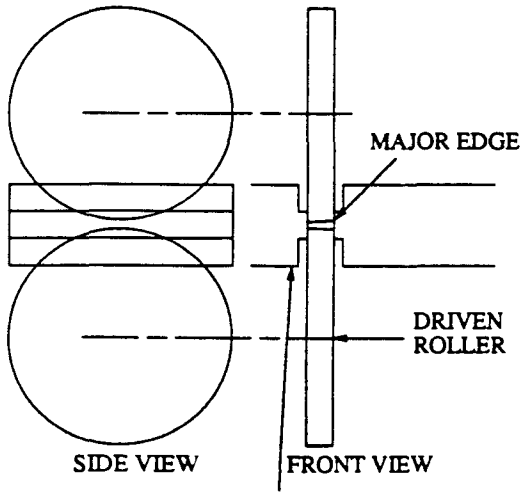


Fig.6. Modification to both side rollers (removed .254 mm X 9.525 mm four places)

After these modifications were complete the Turk's-head was reassembled and the rollers aligned, the surface cracks and the broken filament condition were eliminated.

## Mandrel Alignment

The mandrel alignment is a critical part of the start-up alignment procedure. The mandrel is rigidly fixed to the machine with only a coarse Z axes adjustment. The fine X,Y and Z adjustment is done by moving the Turk's-head in relation to the mandrel tip. This is presently done visually by sighting through the Turk's-head and centering the mandrel tip on the aperture set in the Turk's-head. LBL is currently developing an alignment fixture that will make this process repeatable and more precise.

The types of damage that you might observe from an improperly aligned mandrel in the X or Y direction are.

1. Strands out of phase on the top or bottom of cable.
2. Strand or filament damage on the edge of the cable.

The types of damage that you might observe from an improperly aligned mandrel in the Z direction are.

1. Mandrel too close to Turk's-head: copper flashing on corners of cable causing filament damage, broken strands.
2. Mandrel too far from Turk's-head: strands out of phase, strands crossed over, broken strands.

## Conclusion

With these modifications to the Turk's-head, we have been able to routinely manufacture SSC cable to the current specifications without defects.

## Acknowledgements

This work was supported by the Director, Office of Energy Research, Office of High Energy and Nuclear Physics, High Energy Physics Division, U.S. Dept. of Energy, under Contract No. DE-AC02-89ER40486

We wish to thank our collaborators on the SSC project for there contributions to the work described here, in particular, R. Scanlan, S. Graham and J. Royet, at LBL, and A. Greene, A. Bertsche, B. Vogt, at BNL.

## References

1. J. Grisel, J. M. Royet, R. M. Scanlan, R. Armer, " A Unique Cabling Machine Designed to Produce Rutherford-Type Superconducting Cable for the SSC Project," IEEE Trans. on Magnetics, vol. 25, page 1608, 1610 March 1989.

2. R. M. Scanlan, J. Royet, R. Hannaford, "Fabrication of Rutherford-Type Superconducting Cables for Construction of Dipole Magnets," ICMC Conference, Shenyang, PR China, June 7-10, 1988; LBL-24321, May, 1988.

## Disclaimer Notice

This report was prepared as an account of work sponsored by an agency of the United States Government. Neither the United States Government or any agency thereof, nor any of their employees, makes any warranty, express or implied, or assumes any legal liability or responsibility for the accuracy, completeness, or usefulness of any information, apparatus, product, or process disclosed, or represents that its use would not infringe privately owned rights. Reference herein to any specific commercial product, process, or service by trade name, trademark, manufacturer, or otherwise, does not necessarily constitute or imply its endorsement, recommendation, or favoring by the United States Government or any agency thereof. The views and opinions of authors expressed herein do not necessarily state or reflect those of the United States Government or any agency thereof.

*Superconducting Super Collider Laboratory is an equal opportunity employer.*