SSCL 402

# Low Level RF System with Beam Feedback for the Loma Linda Medical Accelerator

Robert C. Webber
SSC Laboratory
2550 Beckleymeade Avenue
Dallas, Texas 75237

*Abstract*

The low level RF system, including beam phase and position feedback, for the 250 MeV proton synchrotron at the Loma Linda University Medical Center is described. This system, though based on a traditional design employed at other facilities including Fermilab, required several innovations in its implementation to cope with the wide accelerating frequency range, 0.98 Mhz to 9.17 Mhz, of the Loma Linda machine. Overall system design is covered with emphasis on the electronics innovations, including a voltage tuned bandpass filter and a frequency independent phase shifter to cover the decade frequency range. Beam position and phase measurement instrumentation, integral to the RF feedback loops, is also described.

## Introduction

A 250 MeV synchrotron has been built for the Loma Linda University Medical Center to provide a proton beam for clinical applications at the Center's Proton Therapy Facility[1,2]. The synchrotron is a 20 meter circumference ring with a zero gradient lattice[3]. A 30 KeV duoplasmatron ion source followed by an RFQ provides 2 MeV protons for injection into the ring. A single accelerating cavity operating at harmonic number 1 boosts the particles to a variable flattop energy, as high as 250 MeV in 0.5 seconds. The accelerated protons are ejected from the ring for delivery to the treatment rooms by a one second half-integer resonant slow spill extraction process. The accelerator system was designed, built, and commissioned at Fermi National Accelerator Laboratory. It was subsequently dismantled, shipped to Loma Linda Medical Center, re-assembled, and re-commissioned as an integral part of the Proton Therapy Facility.

The low level RF system is that accelerator system which controls the frequency, amplitude, and phase of the RF voltage applied to the particle beam, and thus, the beam energy. Any low level RF system must meet requirements determined by machine design parameters including RF amplitude, and the range of beam energies and intensities. For the Loma Linda machine some of these requirements are extremely demanding. That system must accommodate an RF frequency range of nearly a decade, from 0.98 Mhz to 9.17 Mhz, to track the particle velocity from $\beta = .065$ at 2 MeV to $\beta = .61$ at 250 MeV. RF amplitude must be controlled from a few volts, for adiabatic capture of the injected beam, to 330 volts, for the maximum rate of acceleration. Beam instrumentation, used to provide beam position and phase feedback to control acceleration, must handle a factor of twenty range in accelerated beam intensities from commissioning to normal operation, in addition to the >20 db dynamic range of beam current due to the particle velocity increase during acceleration and the current decrease during slow extraction.

Project supported by U.S. Department of Energy and Loma Linda University Medical Center. Work performed at Fermi National Accelerator Laboratory in conjunction with industrial partner, Science Applications International Corporation.
SSC operated by the Universities Research Association Inc., for the U.S. Department of Energy under Contract DE-AC02-89ER40486.

## Low Level RF System Configuration

The Loma Linda low level RF system is based on the design philosophy used in the Fermilab Booster[4] and Main Ring accelerators. The RF frequency is set by a phase-locked loop circuit referencing a fixed oscillator during injection and capture, and the beam frequency itself thereafter. Acceleration is controlled by a feedback loop that causes the measured radial position of the beam to follow a programmed trajectory during the cycle even as the machine bending field ramps up and flattops. Energy gain is adjusted by manipulating the phase of the cavity voltage relative to that of the beam. A separate RF amplitude regulator loop forces the cavity voltage to track a programmed amplitude profile during the cycle.

Function generator cards, down-loaded through the accelerator control system, provide three analog programs representing the desired radial beam position, radial position loop gain, and RF amplitude as a function of time in the cycle. The accelerator timing system provides the necessary timing signals.

A block diagram of the Loma Linda system is shown in Figure 1. The system is implemented with analog circuitry packaged in standard NIM modules in two crates.

### *The Frequency Loop*

The frequency loop consists of the Voltage Controlled Oscillator (VCO), the Phase Detector and Feedback Module, and the Tracking Filter and AGC Module. The heart of the VCO is a temperature compensated, varactor tuned oscillator utilizing a Motorola MC1648 integrated circuit, operating from 54.08 to 62.27 Mhz. Its output is mixed with 53.1 Mhz from a crystal oscillator. The difference product, filtered by a 13 Mhz low pass filter, is the desired VCO output. This method facilitates filtering for better output spectral purity and eases problems of controlling the tuning transfer function.

Though the VCO operates within a phase-locked loop, an analog signal proportional to the measured synchrotron dipole current provides coarse frequency programming. Since the dipole current scales with particle momentum while the required frequency scales as the velocity, the inherently non-linear oscillator tuning function is designed to match the velocity vs. momentum curve to achieve optimum open loop frequency setting. To provide a satisfactory output frequency when the dipole supply is off, a default level corresponding to the injection current is switched in when the measured current drops to less than 75% of the injection value.

The Phase Detector and Feedback Module performs the phase

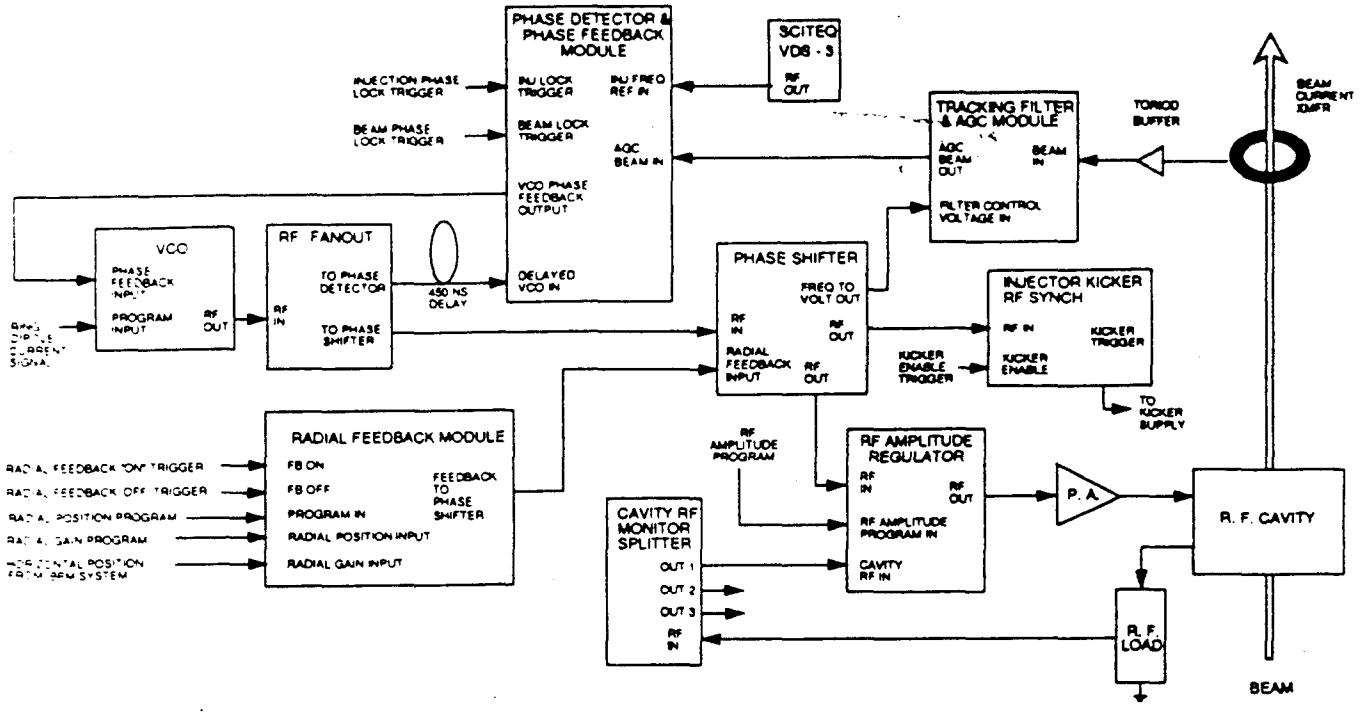


F igure 1. Loma Linda Synchrotron Low Level RF System Block Diagram

detection, gain and compensation, and reference frequency selection functions of the phase-locked loop. Its output provides a correction signal to the VCO to maintain synchronism between the beam and the accelerating cavity RF voltage. A switch in the phase detector allows the VCO to phase lock to the beam itself when a beam signal is available or, in its absence, to a reference oscillator set to the injection frequency. Additional features are included in the phase detector circuitry to assure lock acquisition.

The VCO input to the phase detector must be delayed relative to the VCO module output by a time corresponding to that from the VCO, through the power amplifier and RF cavity, to the beam and back from the beam pickup to the phase detector. This is necessary to minimize phase accumulation in any differential delay as the frequency is swept; an accumulation which must otherwise be compensated for by the limited range of the Phase Shifter Module. The injection reference frequency is provided by a Sciteq VDS-3 synthesizer. The beam phase signal is obtained through the Tracking Filter and AGC Module.

The function of the Tracking Filter and AGC module is to provide an unambiguous, leveled signal reflecting the beam phase to the phase detector. This is required to reliably lock the VCO to the beam over the decade frequency range. The input for this module comes from a Pearson 2854 transformer and accompanying amplifier installed in the ring. The transformer / amplifier system was measured to have 40 Mhz frequency response on the bench. The ring environment likely degrades that response somewhat, but it remains high enough to provide quality phase information even at 10 Mhz. The beam signal is rich in harmonics due to the bunched nature of the beam and the wide bandwidth of the transformer, rendering it unsuitable as a phase detector input directly. Filtering is required to limit the signal bandwidth to prevent harmonic locking of the VCO. However, the required frequency range rules out a fixed frequency filter. The solution is a low pass filter coupled with a unique, constant Q=5, linear voltage controlled active bandpass filter. Figure 2 shows a schematic of this filter design. Incorporating 1N5767 PIN diodes as variable resistor elements and a wide band current feedback op amp in a standard active bandpass filter configuration results in the desired filtering function at these frequencies, with no excess phase when tuned to the beam frequency. Tuning linearity is achieved by operating the PIN diodes in a range where their effective RF resistance is inherently a linear function of bias current. The center frequency of the filter is set by a signal proportional to the measured VCO frequency provided by the Phase Shifter Module. The filter output is amplified in a wide dynamic range AGC circuit to provide a leveled output for the phase detector.

The initial phase of the RF relative to a gap in the beam, resulting from the finite fall time of the injection kicker, is set by a variable delay in the Injection Kicker - RF Synch Circuit. This circuit functions to synchronize the firing of the kicker to a particular phase of the accelerating cavity RF voltage. Proper phase is chosen such that the gap in the circulating beam appears in a region of phase space outside that of the stable RF bucket. This serves to maximize capture efficiency while minimizing pulse to pulse variations in captured beam intensity.

### *The Radial Position Loop*

A beam position monitoring system, independent of the low level RF, provides 50 Khz bandwidth normalized radial and vertical beam position information from eight locations in the ring. The Radial Feedback Module compares one of these radial signals to the radial position program generating an error signal which, appropriately gated, amplified, and compensated, drives the Phase Shifter. An analog multiplier allows programmable loop gain via the Radial Gain input to accommodate changes required by varying beam momentum and RF voltage. The Phase Shifter controls the beam energy gain, and thus the beam position, by adjusting the phase of the cavity voltage relative to the beam.

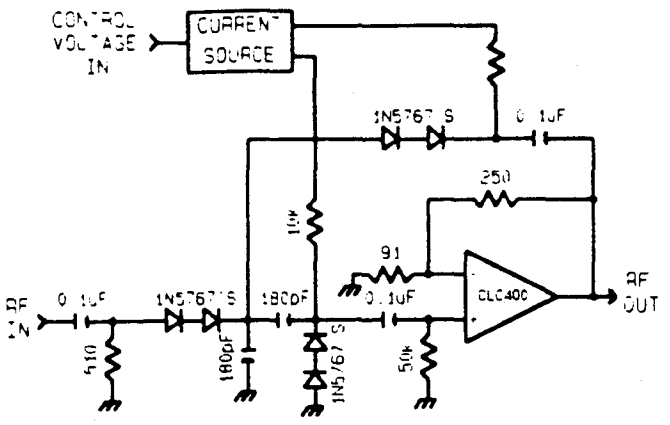


Figure 2.
1 to 10 Mhz Linear Voltage Tuned Bandpass Filter

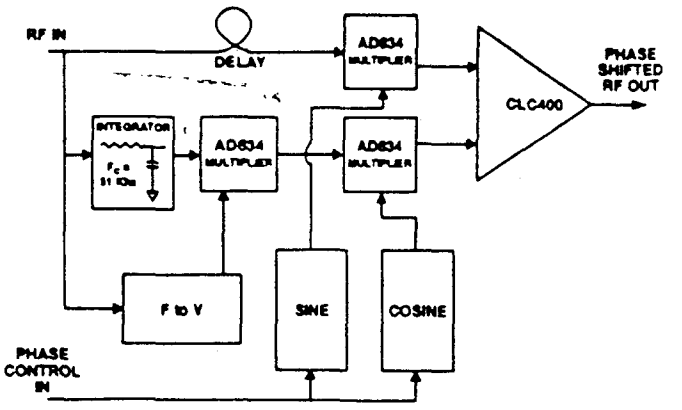


Figure 3.
1 to 10 Mhz Frequency Independent Phase Shifter

The Phase Shifter must provide linear, frequency independent, phase control of the RF over the 0.98 to 9.17 Mhz operating range without introduction of excess phase. Such phase control is commonly achieved in narrow fractional bandwidth systems by vector addition of properly scaled quadrature components of the RF, $\cos(\omega t + \varphi) = \cos(\varphi)\cos(\omega t) - \sin(\varphi)\sin(\omega t)$. A novel implementation allowed application of this concept in this system. A block diagram of this circuit is shown in Figure 3. To produce the quadrature RF components, with no excess phase over the decade frequency range, a part of the input is passed through an integrator, a simple passive RC filter operating well beyond its 3db corner. The result is a 90° signal with 2° accuracy for any frequency within the band, but with an amplitude inversely proportional to frequency. Re-normalization is accomplished by utilizing a wide band analog multiplier chip to multiply this RF signal with a signal proportional to the measured frequency, from a frequency to voltage convertor circuit within the Phase Shifter Module. This multiplier output and a properly delayed version of the original RF input form the required, constant and equal amplitude, quadrature RF signal pair over the frequency band. The phase offset terms, $\cos(\varphi)$ and $\sin(\varphi)$, are produced by two 100 Khz bandwidth trigonometric function generator chips operating on the input phase control voltage. Two additional multipliers generate the final product terms which are then summed by a wide band op amp circuit. The result is a fixed amplitude RF signal shifted in phase from the input by an angle determined by the control voltage and independent of frequency. This implementation was made practically and economically feasible by the timely introduction of the wideband Analog Devices AD834 multiplier and Comlinear CLC400 and 401 current feedback amplifiers.

The frequency to voltage convertor signal produced by this module is also used to control the center frequency of the tracking filter in the Tracking Filter and AGC module.

### *The RF Amplitude Regulator Loop*

The RF Amplitude Regulator circuit detects the amplitude of a cavity RF signal and compares it to the RF amplitude program. The resulting error signal is amplified and filtered to modulate the low level RF signal from the Phase Shifter Module before it is applied to the power amplifier, thus controlling the accelerating cavity voltage. The available modulation range is >50 db over the required frequency band, but the dynamic range of this feedback loop is only 50 db, limited by the usable range of the amplitude detector circuit.

## Summary

This low level RF system for the Loma Linda synchrotron has operated satisfactorily for nearly two years, satisfying the machine's requirements from commissioning and initial operation at 2E9 accelerated protons per pulse to current operation at 5E10. The system withstood the move from Fermilab to Loma Linda without problems and accelerated beam was re-established with, in fact during, a single cross country telephone call concerning the RF system. This is a tribute to all who influenced its design, fabricated the circuits, cared for it, and learned to make it work.

## Acknowledgments

The author would especially like to acknowledge the contributions of Jeff Arthur, Jim Crisp, Jim Fitzgerald, Quentin Kerns, Jack McCarthy, Keith Meisner, Judy Sabo, and Phil Young.

## References

[1] J. M. Slater, "Developing a Clinical Proton Accelerator Facility: Consortium-assisted Technology Transfer," this conference.

[2] F. Cole, et. al., "Design and Application of a Proton Therapy Accelerator,", 1987 Proc. Particle Acc. Conf., IEEE Cat. No. 87CH2387-9, pp. 1985-1987, March, 1987.

[3] Fermi National Accelerator Laboratory, "Loma Linda University Medical Center Proton Therapy Facility, Engineering Design Report," Fermi National Accelerator Laboratory, February, 1987.

[4] C. Kerns, et. al., "New Low-level RF System for the Fermilab Booster Synchrotron," 1987 Proc. Particle Acc. Conf., IEEE Cat. No. 87CH2387-9, pp. 619-621, March, 1987.