SSCL-386

SSCL-386

Superconducting Super Collider Laboratory

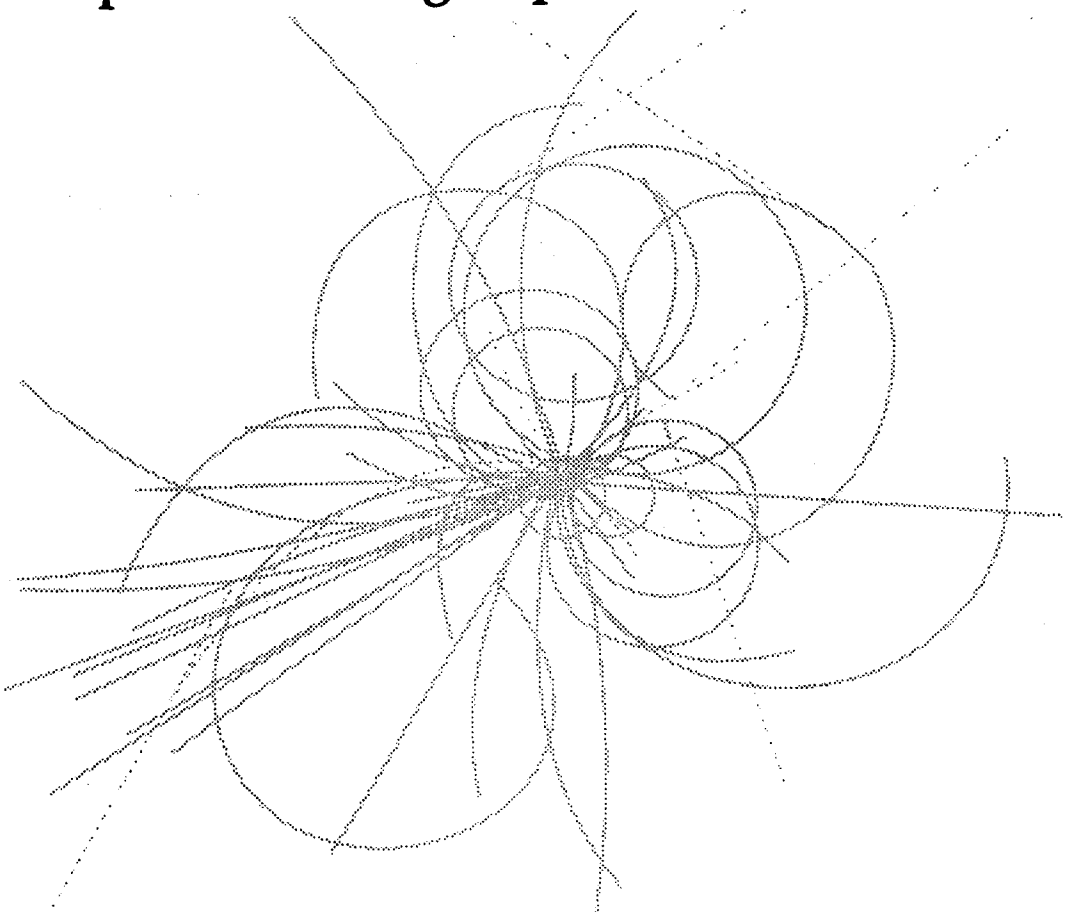

SSC Spool Piece Design

D. Clark, K. Costin, D. Hutton, R. McConeghy,
A. Scheidemantle, and R. Smellie

March 1991

To be published in Supercollider 3, Plenum Press, New York SSCL-386

SSC Spool Piece Design*

D. Clark, K. Costin, D. Hutton, R. McConeghy,
A. Scheidemantle, and R. Smellie

Accelerator Systems Division
Superconducting Super Collider Laboratory†
2550 Beckleymeade Avenue
Dallas, TX 75237

March 1991

* Presented at the 1991 International Industrial Symposium on the Super Collider, Atlanta, Georgia, March 13–15, 1991.

† Operated by the Universities Research Association, Inc., for the U.S. Department of Energy under Contract No. DE-AC02-89ER40486.

SSC SPOOL PIECE DESIGN

D. Clark, K. Costin, D. Hutton, R. McConeghy,
A. Scheidemantle, and R. Smellie

Accelerator Systems Division
Superconducting Super Collider Laboratory*
2250 Beckleymeade Avenue
Dallas, Texas 75237

Abstract: The spool piece design for the standard arc half-cell of the Superconducting Super Collider collider ring is an electromechanical system which performs a variety of tasks. The components provide conditioning and control of the cryogenics and electrical bus routing and protection; they also accommodate the beam position monitor and corrector magnet families, vacuum separation, and connection points for control and instrumentation. The design uses unique locations for each component, mixing form and function in a limited amount of allocated length in the standard 90 m half-cell. This paper describes the purpose and positioning of the various components and the assembly sequence required to achieve these space constraints.

INTRODUCTION

The spool piece for the standard arc half-cell of the Superconducting Super Collider collider ring are assembled with a series of five dipole magnets and one quadrupole magnet forming a 90-m-long half-cell. The typical half-cell arrangement fits into a section comprised of 12 half-cells equalling 1080 m in length. There are four sections to an arc string and two strings in a collider sector. The standard arc sector is 8640 m long. Five different spool designs have been identified throughout these arc sectors. Each of the spool types has typical components and at least one unique function identifiable to the particular location. The five spools are summarized in Table 1.

VACUUM

Spool pieces have two operating vacuum systems. The first, defined as the beam tube vacuum, must operate during beam operation at or below 10^{-7} (Pa). The second, defined as the cryostat insulating vacuum, must operate at or below 10^{-4} Pa.

* Operated by Universities Research Association, Inc., for the U.S. Department of Energy under Contract No. DE-AC02-89ER40486.

Table 1. Summary of the Standard Arc Spool Pieces.

Model	Description	Slot Length
SPA	Spool piece "A" model with standard component parts.	4.575 m
SPR	Spool piece "R" model with standard components with a recooler element.	4.575 m
SPRF	Spool piece "RF" model with standard components with recooler element, feed for cryogenic bayonets and power leads on each end.	7.1 m
SPRI	Spool piece "RI" model with standard components with one recooler element, beam tube, and cryogenic isolation.	7.1 m
SPRE	Spool piece "RE" model with standard components with one recooler element, cryogenic bayonets and power leads at each end.	7.1 m

The two vacuum systems are independent in function and operation, yet the method of evacuation and means of providing vacuum are similar. Each vacuum system is maintained by the flowing of cryogens around or through the respective evacuated spaces. Liquid helium at 4.15 K is routed around the outer surface of the evacuated beam tube, and condensable gases within the beam tube are removed by being adsorbed by the cryogenically cooled walls. The vacuum of the insulating space is maintained by circulation of 80 K liquid nitrogen through 2-1/4 in.-I.D. tubes which are in thermal contact with the 80 K cryogenic shield. There is also a 20 K cryogenic shield in thermal contact with a 3-1/4 in.-I.D. tube whereby 20 K helium gas is circulated. Condensable gases are removed by being adsorbed by the large cold surfaces of these cryogenic shields.

Initial evacuation of each vacuum system is provided by mobile mechanical pump carts that reduce the pressure in the beam tube and insulating spaces until crossover pressures are achieved; the start of circulating cryogens will improve and maintain vacuum. Air to vacuum leak detection are conducted utilizing portable mass spectrometer leak detectors.

BEAM TUBE VACUUM

The beam tube can be isolated every six cells or 1080 m by using gate valves. These gate valves operate at room temperature and are located in an ambient temperature region of the beam tube.

Each spool piece contains a beam tube pump out port that allows for evacuation, ion pumping, and pressure relief. Rupture discs are provided on the beam tube pump out ports to protect the beam tube from over-pressure. An ion pump is used every cell (180 m) to monitor the vacuum in the beam tube and to provide some pumping of the non-condensable gases. The pump out ports contain metal-sealed, right-angle, manual valves in series with high-vacuum, right-angle manual valves. These valves allow for system evacuation of the beam tube and ultra-high vacuum isolation from the mobile pump carts.

The beam tubes are manufactured from stainless steel alloys and are considered as ultra-high vacuum components which require special manufacturing, cleaning, and handling.

CRYOSTAT INSULATING VACUUM

The spool pieces contain an integral vacuum barrier which allows the collider ring cryostat insulating vacuum to be divided in half-cell (90 m) intervals. The vacuum barrier allows for isolation of the half-cell during vacuum leak checking operations and containment within these 90 m half-cells in the event of vacuum failure.

Each spool piece contains two evacuation ports: one located upstream and a second downstream from the vacuum barrier. These ports are equipped with 2-1/2 in.-I.D. high-vacuum, right-angle valves to allow for system evacuation via the mobile pump carts. Pirani and cold cathode gauges are mounted at these locations to monitor the cryostat vacuum within each half-cell.

The spool piece is equipped with pressure relief lift-off plate valves that are located upstream and downstream of the vacuum barrier. These valves will open to relieve the system from over-pressure.

CORRECTOR MAGNETS AND BPM

The cold mass tube in the spool piece contains the corrector magnets along with their support structure. It provides to the assembly the added stiffness necessary to maintain the stringent alignment requirements of the corrector elements and the beam position monitor (BPM). Figure 1 shows the BPM attached to the end of the corrector support at the lead end of the spool piece.

The spools have been designed to allow for a variable combination of correction magnets to be inserted into any spool as the collider correction scheme demands. Nominal combinations of quadrupole, sextupole, and dipole correctors are expected with alternating additions of octupole and decapole elements to the overall package.

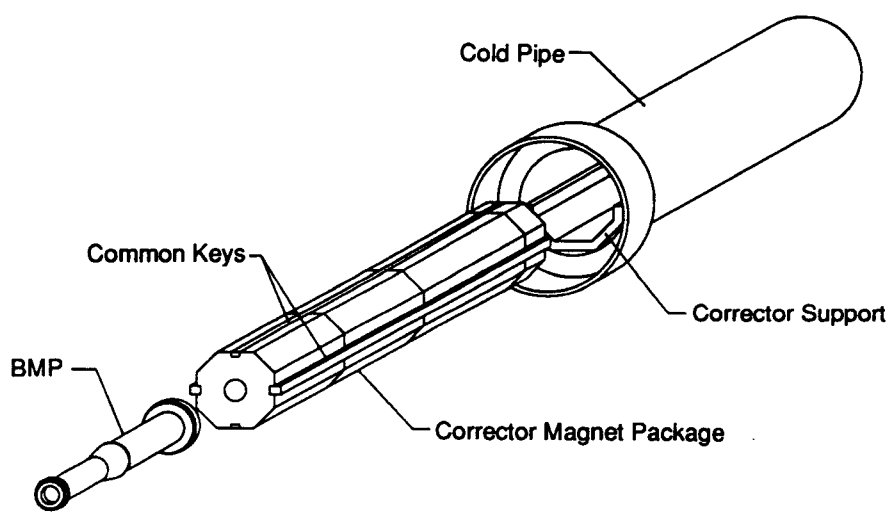

Figure 1. Corrector Magnets and Beam Position Monitor (exploded view).

While combinations of correctors will vary, the packages are being designed to provide a common physical geometry. The iron around the coils have the same external dimensions, and the individual magnets are keyed together to construct an overall package. Support and registration of the magnet packages utilize two of the four common keys used to tie the magnet iron together. Package lengths differ, but accommodations of approximately 3.5 m are made in the SPA and SPR spool, and 2.5 m in the SPRE, SPRF, and SPRI spools.

Production of spools and corrector element packages will be independent to allow the greatest flexibility for magnet variations and to keep the spools standardized. The magnet packages is inserted in a "breech loading" fashion from the lead end of the spool piece. An internal support structure accepts and registers the correctors via the two common keys which protrude from the sides of the magnet iron. The BPM is secured to the end of the corrector support; then the cold pipe can be closed and the spool is ready to be installed in the collider tunnel.

A primary advantage of this method is that the spool piece can be completed with modest production tolerances, thereby reducing cost. In addition, the registration surfaces of the corrector support structure are open to optical inspection and measurement techniques after final fabrication. This final measurement minimizes the tolerance in knowing the location of the corrector elements as required for proper tunnel alignments. The registration of the BPM, whose position must also be accurately known, is provided in the machining of the corrector support. The corrector element package and the BPM lie very precisely along the same line. This line is established by the corrector support structure and is the one measured as a final assembly step.

VACUUM BARRIER

The vacuum barrier performs two major tasks. The first is to divide the insulating vacuum in the cryostat into two regions to provide faster pump down time at installation. In addition, the vacuum barrier provides containment for any failure of the vacuum system which may occur in the collider ring. The vacuum barrier provides a small evacuated volume (half-cell) for the collider ring to be managed in an efficient manner.

The design of the vacuum barrier is constrained by several factors. Sealing off the cross-section of the spool piece creates a direct heat conduction path from the outer cryostat to the cold pipe. Since the cold pipe can tolerate only very low amounts of heat input, the heat conduction path is made as long as practical. This is accomplished by a series of six very thin-walled stainless steel cylinders which are nested inside each other and are connected at alternating ends with small annular rings (Figure 2). In addition, five cryogenic lines pierce the annular rings in the vacuum barrier to intercept a portion of the conductive heat. Note that only three of the five lines are shown in Figure 2 for clarity. The effectiveness of the cryogenic cooling is improved by running copper straps along two of the annular plates and attaching them to the closest cryogenic line. The copper straps provide an alternate heat conduction path to the cryogenic lines, and have substantially better thermal conductivity.

The design of the vacuum barrier is also constrained structurally. If a cryogenic line breaks, the vacuum barrier may have to withstand a pressure differential of 0.25 MPa. The thin-walled cylinders in the vacuum barrier tend to buckle at pressures of this magnitude. The resistance to buckling is increased by forming "wrinkles" in the cylinders before they are assembled into the vacuum barrier. These wrinkles are uniformly spaced axially and have a low profile to reduce the stress concentration occurring under axial loads.

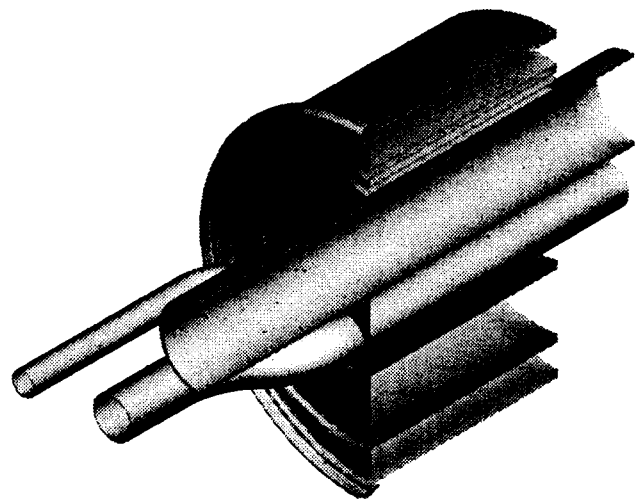

Figure 2. Heat-conducting Rings in the Vacuum Barrier.

QUENCH STOPPER

The SSC quench protection scheme is centered around the goal of detecting a quench in a single half-cell and then preventing a quench from propagating outside of that single quenching half-cell. Potentially damaging current is shunted around the affected half-cell through the quench stopper and safety lead assembly. The quench stoppers also provide a large thermal mass to quickly conduct heat away from a quenching superconductor, stopping the quench from propagating to the next half-cell. When conducting large system currents, joule heating may raise the quench stopper temperature excessively, causing a quench in the adjacent half cell. Therefore, in the limited space allocated, the quench stopper design must limit the temperature increase to an acceptable parameter. The assembly must balance a combination of low resistance, to limit the I^2R heating to an acceptably small value, and good heat transfer features.

Experience from Fermi Tevatron development[1] provides the following parameters: maximum temperature rise of 20 K at the top of the quench stopper assembly where the safety lead connects,and 50 mK at the bottom where the superconducting power bus is bonded. Given the geometry of the spool piece, the Design Section developed a concept for the physical structure of the quench stopper (Figure 3).

If we initially ignore the heat transfer characteristic (adiabatic case) and concentrate only on limiting the temperature rise, we can determine the physical dimensions for further analysis.

Drawing on work by Wilson[2] and McAshan,[3] the cross-sectional area of the vertical "rib cage" can be determined by manipulating the adiabatic heat balance equation.

$$J^2(t)\rho(T)dt = \mu C(T)dT, \tag{1}$$

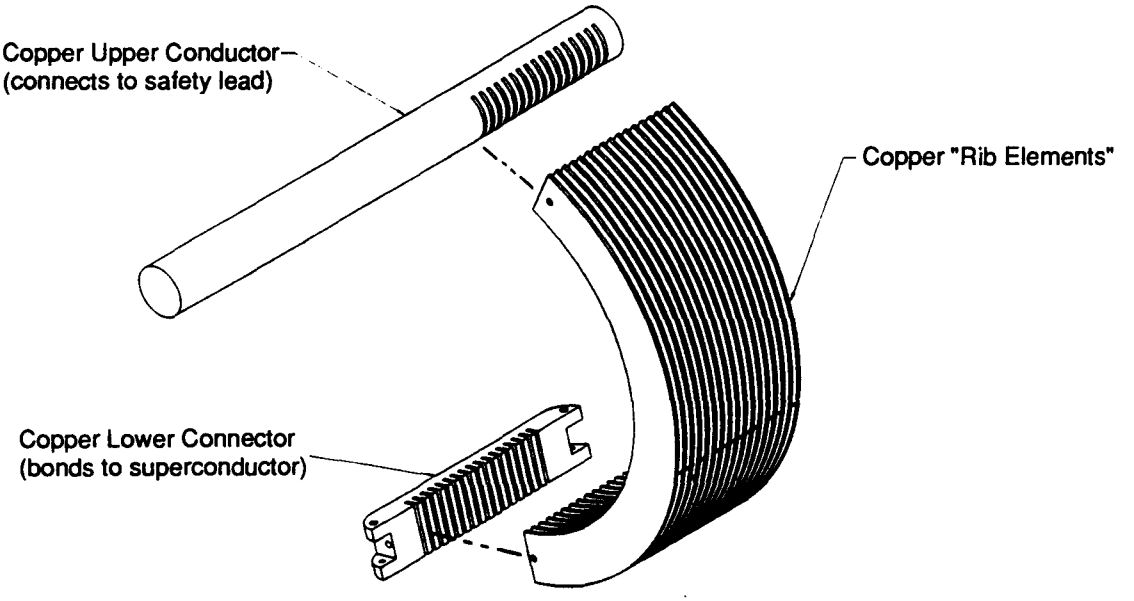

Figure 3. Quench Stopper Assembly.

where

$$
\begin{aligned}
t &= \text{time} \\
T &= \text{temperature} \\
\rho(T) &= \text{resistivity} \\
\mu &= \text{density} \\
C(T) &= \text{specific heat.}
\end{aligned}
$$

Separating variables and expanding the current density, we obtain

$$\frac{I^2(t)}{s^2}dt = \mu\frac{C(T)}{\rho(T)}dT \tag{2}$$

where $s =$ cross sectional surface area of the rib cage.

Rearranging to solve for s^2 and integrating, we obtain

$$s^2 = \frac{\int_0^\infty I^2(t)dt}{\mu\int_{T_{\text{init}}}^{T_{\text{max}}} \frac{c(T)}{\rho(T)}dT}. \tag{3}$$

The numerator of Equation (3) can be evaluated by assuming worst-case current flow, such as a quench during magnet training when current could be 7000 amps. So, for a 40 mm magnet system with a time constant of 24 seconds,

$$I_s = 7000e^{-t/24\,\text{sec}} \text{ amps}$$

and,

$$\int_0^\infty I_s^2 dt = 588\,\text{MIITS}. \tag{4}$$

The value of the denominator in Equation (3) can be found from calculated values of MIITS integrals for copper, given a material resistivity ratio and fixed temperature rise.

Selection of OFHC copper 60% cold-drawn with a resistivity ratio[4] of 50, and limiting the temperature rise to 20 K yields a value[3] of 9.8 MIITS/cm^4. The necessary cross-sectional area of the vertical rib cage section, then, is 7.745 cm^2.

For the lower conductor section that bonds to the rib cage section, the physical dimensions are somewhat driven by the width of the parallel rib elements. The MIITS/cm^4 for this lower conductor are 588 MIITS/831.4 cm^4 = 0.7072 MIITS/cm^4.

In the actual design, 17 standard identical copper plates were used to achieve the required cross-sectional area. In order to determine the current distribution through each parallel conducting element in this rib cage section of the quench stopper, a SPICE circuit model was developed representing the quench stopper as a resistive divider. The resistance of each element was calculated assuming OFHC Cu (60%CD) at a temperature of 19.65 K and a resistivity[5] of 0.032 micro ohm-cm. The resistivity of the same material at 4.0 K is 0.031 micro ohm-cm. The total MIITS/cm^4 are plotted in Figure 4 for the two end elements and one middle element. As shown in the plot, there could be a small temperature gradient across the parallel plates. However, the temperature rise is affected by the actual, post-manufacturing resistivity of each parallel plate.

The SSC spool piece quench stopper has been designed and analyzed for the adiabatic case. The next step is to test the assembly with actual expected current transients to verify the model.

PIPING AND INSTRUMENTATION DIAGRAM

The Piping and Instrumentation Diagram (P&ID) is a spool piece requirements-drawing that identifies major system components, lines, commodities, and flows, combined with the function location of control and instrumentation points.

An identification label, referred to as a function designator (FD), is assigned to each control and instrumentation point. The FD gives each point a unique name and provides additional information about specific requirements. The first character in the FD identifies the system, the second identifies the type of function performed, the third and fourth provide developmental testing identification, and the fifth and sixth are ultimately necessary for collider location. During developmental testing the fifth and sixth characters indicate subsystem information.

Many of the FDs are for developmental testing only and, therefore, are not required for collider instrumentation. All of the SVERRDXX's (safety lead voltages), STERRDXX's (safety lead temperatures), QTERRDXX's (quench stopper temperatures), and all but two of the QVERRDXX's (quench stopper voltages) are strictly for development of the safety leads and quench stopper. Table 2 is a summary of the FDs that the standard spool piece will require to support the collider operation.

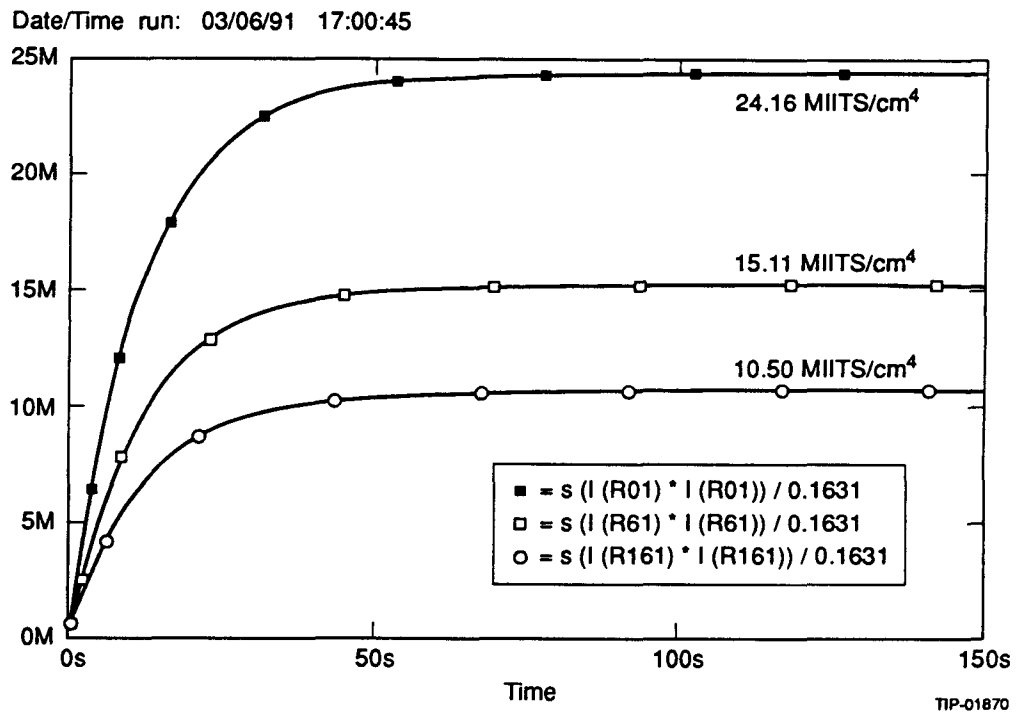

Figure 4. MIITS Integrals for Quench Stopper "Rib Elements."

CRYOGENIC COMPONENTS

The cryogenics in the spool piece consist of three related subsystems. The piping and relief valves transmit cryogenics to the next magnet, and the relief valves protect the piping. The recooler and supporting piping components remove the heat absorbed in the LHe from the magnets upstream of the spool piece. The quench suppression components redirect the main LHe flow and cryogenically cool the safety leads.

PIPING AND RELIEF VALVES

The piping and fluid components for a completely configured spool piece are shown in Figure 5. Most spool pieces will be composed of a subset of the piping and components shown. Each spool piece will always have lines 1, 2, 3, 4, and 5. Table 3 specifies the cryogens in each line. The function of lines 1 through 5 is to carry cryogens to the next magnet cell. As shown in Figure 5, lines 2, 3, 4, and 5 make a radial displacement to pass through the vacuum barrier. The lines return to the original positions after passing through the vacuum barrier.

An ancillary line in each spool piece with a quench stopper is the quench manifold. The cooldown valve, LHe relief valve, and quench valve are located on the quench manifold. The quench valve will be discussed under the quench suppression sub-system. The cooldown valve function is to relieve LHe warmed during the cooldown cycles. This valve has a flange

Table 2. FDs Required for Collider Operation.

Function Designator	Definition of Function Designator
QVERQSO1	Volt IND CW Quench Stopper
QVERQS02	Volt IND CCW Quench Stopper
QAERST03	Quench Htr 3 Fire CMD
QAERST04	Quench Htr 4 Fire CMD
LTERST01	LHe 4.5 K Temp IND (2 K - 40 K Temperature Range)
LTERST02	LHe 4.5 K Temp IND (Red)
LTERST03	Line 1 300 K Temp IND (20 K - 300 K Temperature Range)
LTERST04	Line 1 300 K Temp IND (Red)
LCERRE01	Recooler Vlv Pos CMD
LZERRE01	Recooler Vlv Pos IND
QAERST07	Quench Vlv OPN CMD
QZERST01	Quench Vlv OPN IND
QZERST02	Quench Vlv CLSD IND
LAERST01	Cd/Wu Vlv OPN CMD
LZERST01	Cd/Wu Vlv OPN IND
LZERST02	Cd/Wu Vlv CLSD IND
SAERCW01	CW Sfty Ld Clng Vlv OPN CMD
SZERCW01	CW Sfty Ld Clng Vlv OPN IND
SZERCW02	CW Sfty Ld Clng Vlv CLSD IND
SAERCC01	CCW Sfty Ld Clng Vlv OPN CMD
SZERCC01	CCW Sfty Ld Clng Vlv OPN IND
SZERCC02	CCW Sfty Ld Clng Vlv CLSD IND
LLERRE03	Recooler Level Nominal IND
QTERRD02	Quench Vlv Temp Dn (Down Stream Leak INDication)

Notes:
1. CW = Clockwise, CCW = Counter-Clockwise
2. CMD = Command, IND = Indication
3. (Red) = Redundant
4. OPN = Open, CLSD = Closed

Table 3. Cryogens by Line Number.

Line 1	4.35 K LHe	Supply
Line 2	4.35 K LHe	Return
Line 3	4.35 GHe	Return
Line 4	20 K GHe	Shield
Line 5	80 K LN2	Shield

connection, as shown in Figure 6, and may be used to inject warming GHe into the spool and magnets.

The relief valves are located on the exterior of the spool at the flange locations. The cooldown valve does not have a relief valve mounted to its flange. The 4 K and 20 K relief valves are mounted to the flanges on the lead spool access port (LSAP). The 80 K, GHe return, and LHe return relief valves are mounted on the flanges of the return spool access port (RSAP). All relief valves are set to 2.0 MPa.

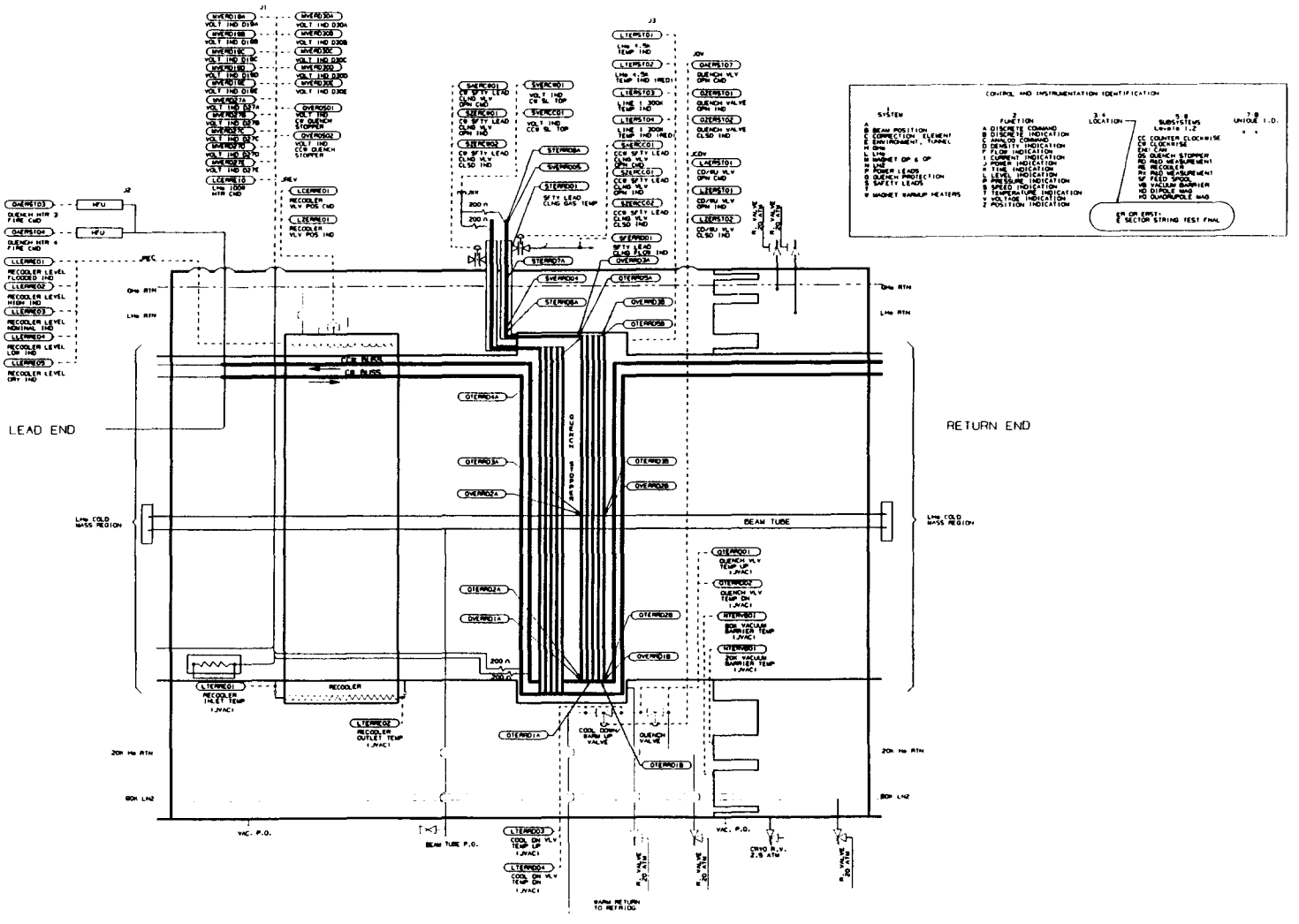

Figure 5. Spool Piece Piping and Fluid Components.

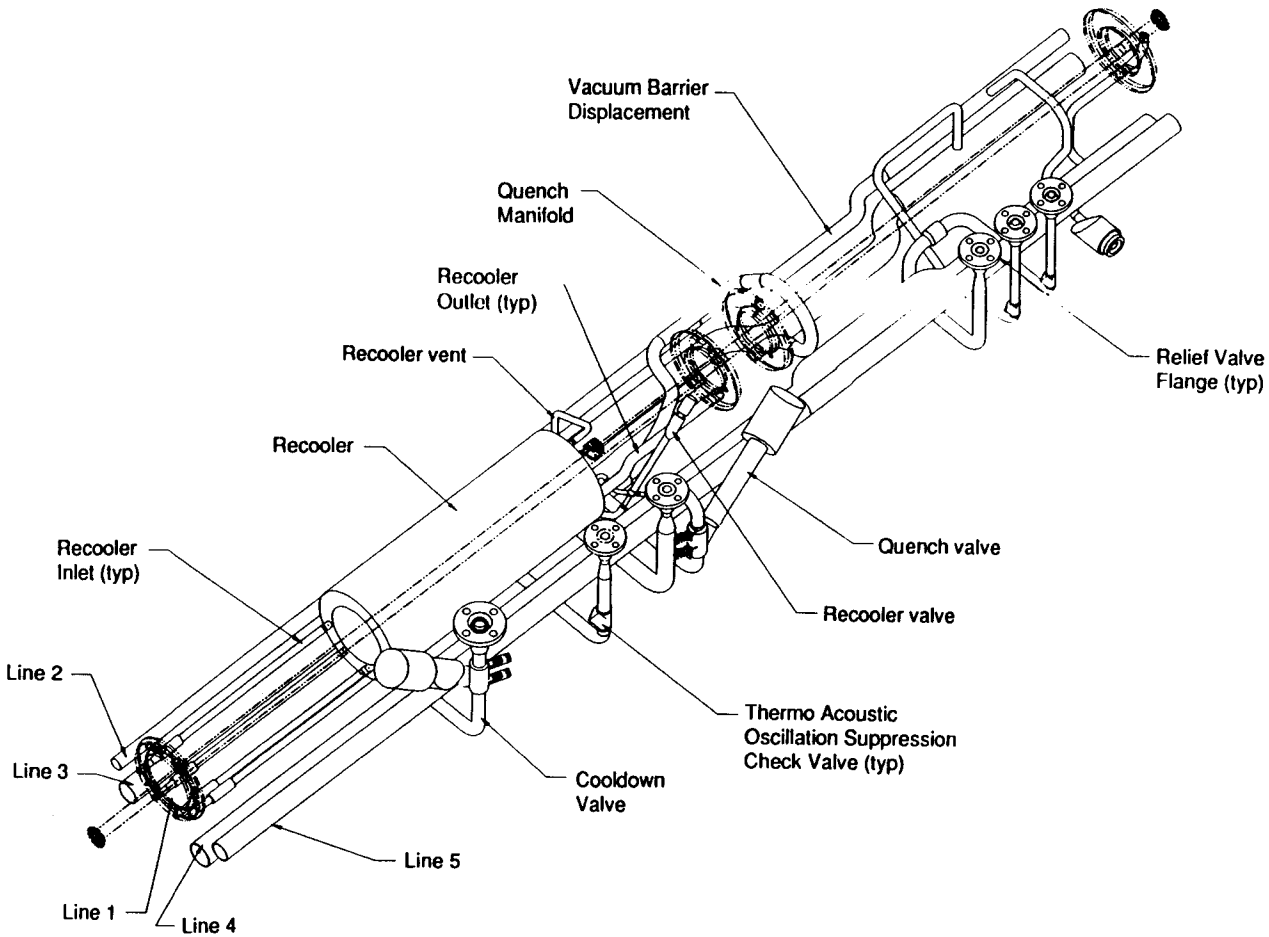

Figure 6. Cryogenic Piping.

The potential for thermo-acoustic oscillation in each relief line was determined based on the T. von Hoffman paper.[7] Check valves were used in those relief lines that indicate a possibility of thermal oscillations.

RECOOLER AND SUPPORTING COMPONENTS

The concentric annular heat exchanger (recooler) has a duty of 100 W. The flow circuit for the recooler starts at the lead end cold pipe flange. Four tubes connect the four holes in the flange with the four holes on the recooler inlet face. Two tubes are used to connect the outlet face of the recooler with two holes in the quench stopper chamber.

The LHe flow into the spool piece is nominally 100 g/sec. Fluid flows at a rate of 98 g/sec through the flange holes. through the recooler, and into at the quench stopper.

The remaining flow of 2 g/sec is through the cold pipe. An annular orifice plate is used to balance the flow between the recooler and the cold pipe. The total pressure drop across this parallel flow circuit is 300 Pa.

The recooler bath fill is supplied from the LHe return line. The flow from the LHe return line is throttled through the recooler valve and flows to the fill port on the recooler. The GHe that is produced in the recooler is vented to the GHe return line. The liquid level in this recooler is sensed by 5 RTDs. The RTD output is fed into a controller that repositions the recooler valve as needed to maintain the recooler bath level.

QUENCH SUPPRESSION

The quench suppression system consists of the safety leads and the quench valve. The safety leads are attached to the upper copper bus bars of the quench stopper. In the standby state, the safety leads are continuously helium-cooled at a flow rate of 3 mg/sec. The cooling flow rate intercepts the heat being conducted down the lead from 300 K to 4 K. During a quench the safety leads heat due to I^2R effects. The safety leads are required to cool back to the initial operating temperature profile in 30 minutes or less.

An exterior valve on each safety lead opens to allow helium to flow at a rate of 0.125 g/sec along each lead. The cooling flow is continued until RTDs on the safety leads indicate the initial temperature.

The second part of the quench suppression is a diversion of cold pipe helium into the 20 K line. The flow circuit for the quench line starts at the quench stopper and terminates at the 20 K line. The quench valve is positioned between the quench stopper and 20 K line.

Normally the quench valve is closed. When a quench is detected in the magnets, the quench valve is commanded to open. Flow in the cold pipe is diverted into the quench line, which is connected to the quench stopper. The LHe in the quench line flows through the quench valve and into the 20 K line.

ASME BOILER AND PRESSURE VESSEL CODE

The spool pieces and components are designed following practices and calculations of the American Society of Mechanical Engineers (ASME) Boiler and Pressure Vessel Code, Section VIII. Division 1. The spool piece outer vessel is designed to withstand elastic instability.

Some internal components of spool pieces are limited in the ASME Code design, resulting from restrictive cryogenic budgets and utilization of high-vacuum design practices.

The material selected for spool pieces is 304 stainless steel. All internal cold piping that carries cryogens is fabricated from 316L stainless steel.

CONCLUSION

The components discussed are assembled into the spool using the concept that the system must use the space constraints of each component in an integral working assembly. The SSC Laboratory spool piece program will design and develop the first spool types, establishing the capability of SSCL to build, modify, and assemble spool pieces. Using a build-to-print approach in designing the spool piece systems, assembly of the components will follow a logical sequence starting with the innermost component.

Industry fabrication experience will be obtained by building early prototype spools along with the SSC Laboratory. Manufacturing techniques will be simplified and improved while the final production spool design is refined.

REFERENCES

1. M. Kurchnin and T.H. Nichol, Safety Leads, Fermilab TM-0815, 1979.

2. M.N. Wilson, Superconducting Magnets, Oxford University Press, New York, 1986, Section 9.1.

3. M.S. McAshan, MIITS Integrals for Copper and for Nb-46.5 st% Ti, SSC-N-468, 1988.

4. R.P. Reed and A.F. Clark, Materials at Low Temperatures, ASM, Carnes Publication Services, Inc., 1983, p. 196.

5. T. von Hoffman, V. Lienert, and H. Quack, "Experiments on Thermally Driven Gas Oscillations," Cryogenics , August 1973, p. 490.