SSCL-382

SSCL-382

Superconducting Super Collider Laboratory

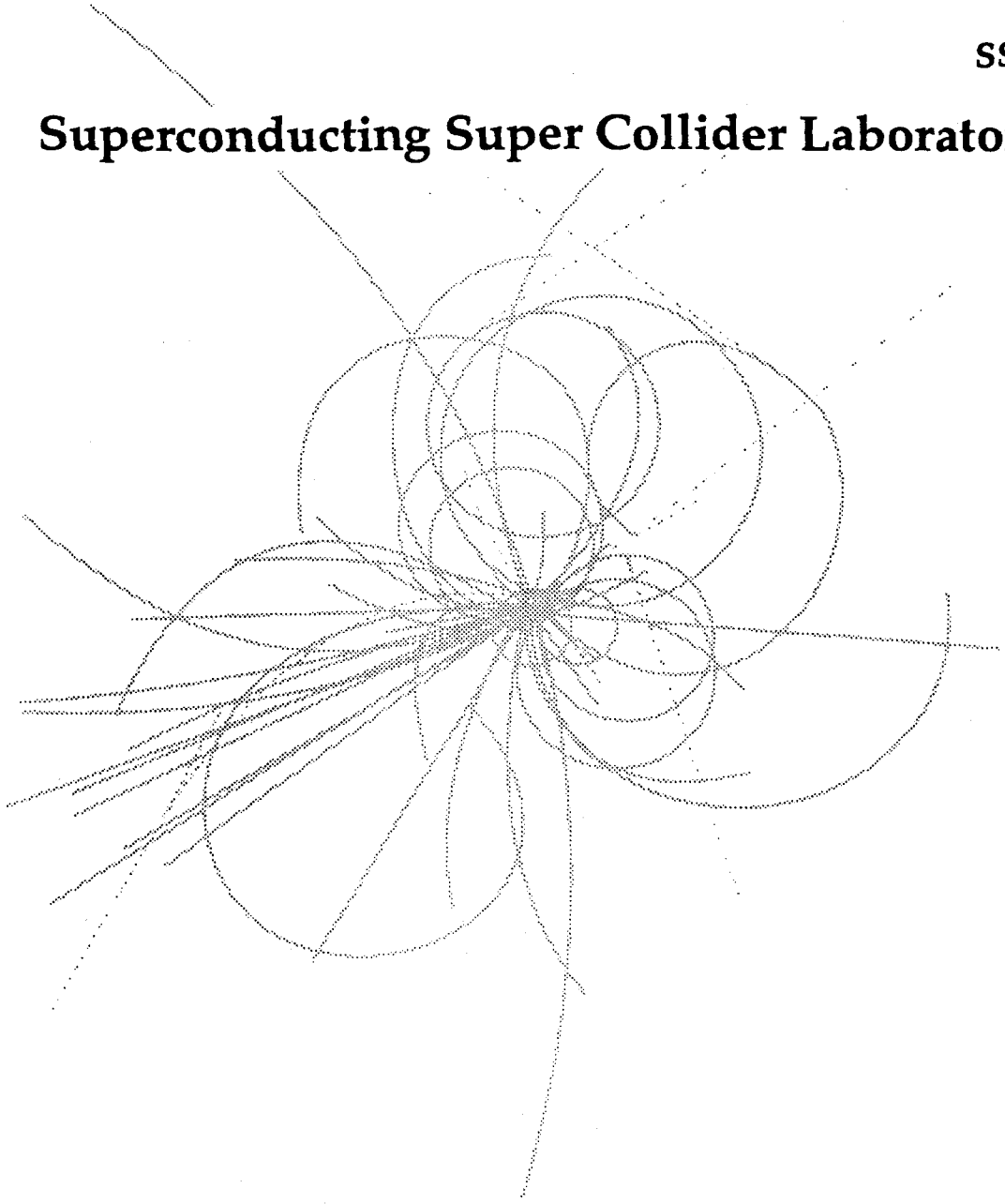

Design of a Thermal Expansion Joint for the SSC Magnet Leads

W. Clay, J. Cox, and R. Thome

March 1991

To be published in Supercollider 3, Plenum Press, New York

SSCL-382

Design of A Thermal Expansion Joint for the SSC Magnet Leads*

W. Clay and J. Cox

Magnet Division
Superconducting Super Collider Laboratory†
2550 Beckleymeade Ave.
Dallas, TX 75237

R. Thome

Massachusetts Institute of Technology
Cambridge, MA 02139

March 1991

---

*Presented at the 1991 International Industrial Symposium on the Super Collider, Atlanta, Georgia, March 13-15, 1991.

†Operated by the Universities Research Association, Inc., for the U.S. Department of Energy under Contract No. DE-AC02-89ER40486.

DESIGN OF A THERMAL EXPANSION JOINT FOR THE SSC MAGNET LEADS

W. Clay and J. Cox

Magnet Division
Superconducting Super Collider Laboratory
2550 Beckleymeade Avenue
Dallas, TX 75237

R. Thome

Massachusetts Institute of Technology
Cambridge, MA 02139

Abstract: In this paper we present the design of a thermal expansion joint for the main power leads of the magnets used in the Superconducting Super Collider (SSC) rings. This design ensures cryogenic stability of the leads in an environment of low flow rate, single phase helium, survives high-energy neutron and gamma radiation, and satisfies the connection scheme to reduce dump resistor voltage. The finite element analysis used to model the leads for both thermal and mechanical responses is discussed. The radiation resistance of candidate materials for use as structural and electrical components at 4 K is discussed. The possible connection schemes for the magnets in the collider ring are detailed and the current design are presented.

INTRODUCTION

Because of the large thermal contractions of the magnet during cooldown, a thermal expansion loop is required for the main leads. It is essential that the expansion loop not increase the overall magnet length. To accomplish this, we have placed the main lead thermal expansion loop within an annular cavity, bounded by the iron yoke laminations, the outer shell, the end clamp, and the magnet end plate.[1] See Figure 1.

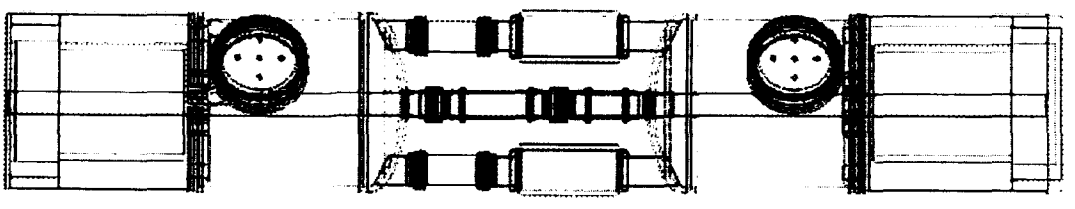

Figure 1. 50 mm Collider Dipole Interconnect Region.

*Operated by the Universities Research Association, Inc., for the U.S. Department of Energy under Contract No. DE-AC02-89ER40486.

In addition to operating in a unique cryogenic environment, the main leads must be spliced with minimal heat generation at operating current. The total heat generation budget for the splices associated with one collider dipole is 0.14 W. This specification requires that each splice joint be limited to about 20 mW. Preliminary joint resistivity measurements indicate that this budget limit can be met. A 10 cm overlap length of the superconducting joint resulted in an average resistance per splice of 5.16×10^{-10} ohms. This results in an average joint heat loss of about 20 mW at 6.5 kA, the operating current of the collider dipole.

The integral of the magnetic field produced by the bus and the length of the bus must be small in relation to the integrated field of the magnet. For this reason, the two leads of the magnet must be kept close together to minimize the field produced in the magnet bore. However, putting the leads close together increases their mutual repulsion force and the support structure of both the bus and expansion loop must be designed to accommodate the increased force.

To ensure reliable operation of the bus, the criterion of a pseudo-stabilized bus was established. The goal of this criterion was to ensure that a bus could not cause quenches in a magnet system. Because the bus and expansion loop are located in single phase helium with low flow rates, it was recognized that methods of cryogenic stabilization based on pool boiling were not applicable. Therefore, methods based on the stabilization of extended surface conductors were investigated by the design team at MIT. The design team used a thermal-hydraulics code to model the heating and subsequent flow of the helium fluid in the bus assembly.

The mechanical stresses produced in an expansion loop operating in the SSCL environment were also considered. An ANSYS model of an early design for an expansion loop is shown in Figure 8. The magnitudes of the Von Mises stresses in the early design are shown in Figure 9.

An additional complication to the design of the bus was a requirement to have "generic" magnets, which could be located in any magnet slot in the ring and still provide an electrical connection scheme which would reduce the voltage across the dump resistors and diodes to acceptable values. This requirement has been deleted for the present series of tests and the dipole magnets are now pre-wired for either a clockwise or counter-clockwise location in the collider. The wiring scheme for a typical half-cell is shown in Figure 6. This scheme considerably reduces the complexity of the magnet connections.

DESIGN DESCRIPTION

The SSC main power leads and the thermal expansion loop are made from the NbTi inner-layer superconducting cable flanked by a woven copper braid on both sides. In the 50 mm dipole, two leads traverse the length of the magnet through the upper bus slot. The upper bus slot is located within the yoke laminations of the upper half of the magnet. The bus slot serves as a path to support the bus leads. The main bus leads are supported within the bus slot by a composite pultrusion, shown in Figure 2. This composite pultrusion insulates the leads from each other and ground, and it orients the leads in a manner which is favorable to field-quality harmonics. Figure 3 shows the cross-section of the pultrusion for the thermal expansion loop.

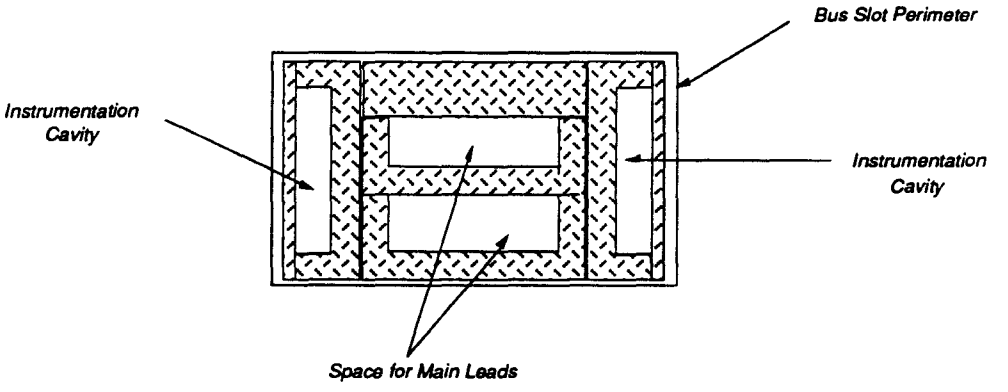

Figure 2. Composite Pultrusion Cross Section in Upper Bus Slot.

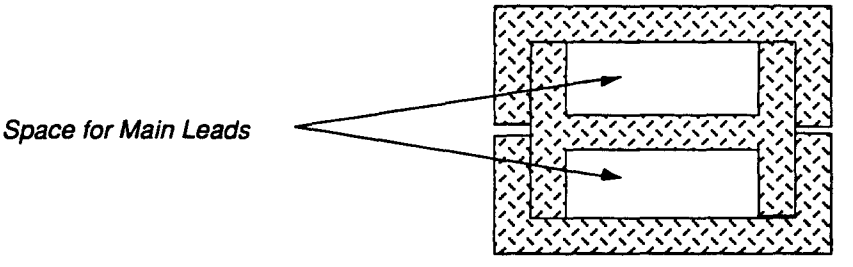

Figure 3. Composite Pultrusion Cross-Section for Expansion Loop.

The superconducting cable used in the expansion loop is the same type of cable used in the inner windings of the dipole coils. This cable has a minimum critical current (I_C) of 9,990 amps @ 4.2K, 7T.

The copper woven braid that flanks both sides of the superconductor is a standard "off the shelf" industrial copper braid that plays a substantial role in the performance of the main bus. Because the main bus is exposed to discrete energy inputs, it must be able to automatically recover from certain finite energy inputs in order to operate with some degree of reliability. Frictional heat input has the most destabilizing effect on the bus. This disturbance can be attributed to the relative motion of two surfaces due to differences in thermal expansion coefficients. The copper braid acts as a barrier, and shields the superconductor from local energy deposits. Because steady-state heat transfer to stagnant helium (approximately 50 mW/cm^2) is very poor relative to two-phase boiling helium, an increase in surface area is required to achieve the desired degree of stability. The copper braid enhances the surface area of the superconductor and provides a trapped volume of helium which encourages "pressure wave" cooling.

The copper braid is soldered to both sides of the superconductor with a pre-measured amount of solder (Figure 4). The solder is a 96/4 tin-silver solder foil and is placed between the superconductor and the copper braid during assembly of the bus and is then heated to approximately 600 K. It is important to note that when soldering the copper braid to the superconductor, care must be taken to insure that the copper braid is not saturated with solder (see Figure 5). If the void of the copper braid is filled, it will reduce the effectiveness of the additional surface area enhancement provided by the copper braid. The solder foil used in soldering the cables together is 0.05 mm thick and 15.2 mm wide. This pre-measured amount of solder ensures that the void in the copper braid is not filled.

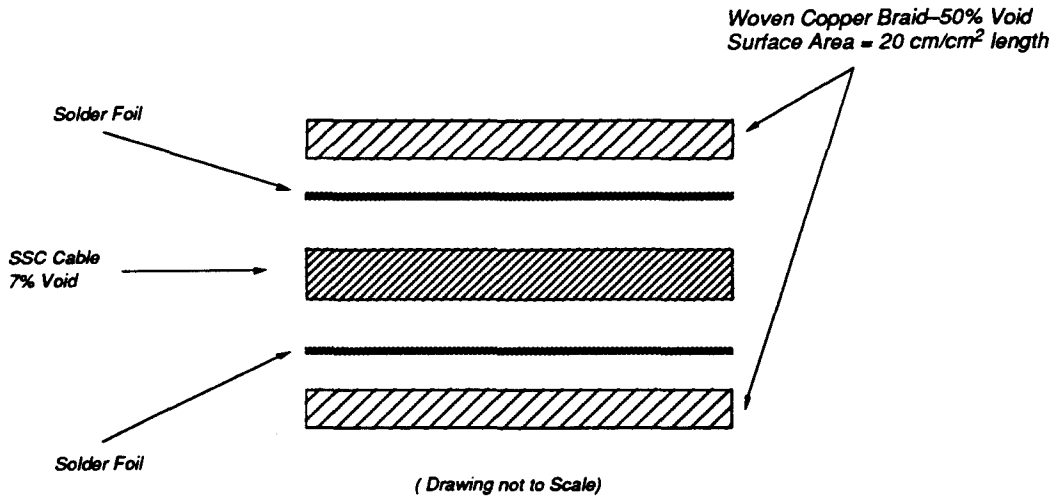

Figure 4. 50 mm Bus Components.

Figure 5. Superconductor/Copper Braid Joint Micrograph.

PSUEDO-CRYOGENIC STABILIZATION

To show the effect of the increased surface area provided by the copper braid, an analysis was done to compare the stability margin of the superconductor with varying surface area enhancements. The analysis of the cable-plus-braid assembly was performed by the MIT design team using a code they developed specifically for this type of analysis. Table 1 shows the effects of this surface area enhancement.

Table 1. Energy Margin for Recovery.

SSC Dipole Cable Only	3.4 mJ/cm
Cable + Copper Bars	12 mJ/cm
Cable + Braid + Copper Bars	300–800 mJ/cm

Energy margin is limited by cooling surface, not copper cross-section.

Range on energy margin with braid depends primarily on braid compaction.

HALF CELL POWER CONNECTION SCHEME

The power leads that provide current to the magnets are defined as a clockwise or counter-clockwise bus. The magnets in a half-cell are connected as shown in Figure 6. This connection scheme assures the protection of the magnets in the event of a quench. An active quench protection system is proposed for the SSC. This active quench protection system consists of warm bypass diodes connected to the magnets via safety leads at every quadrupole location and heaters to propagate the quench in the magnets on one bus of one half-cell.

The magnets connect to the appropriate bus at each interconnect region. The magnet is connected in series with either of the two busses depending upon its location in the half-cell.There are four bus splices in the interconnect region. Two of these splices are made at the lead end of the magnet on the face of the endplate. The other two splices are made in the upper single phase pipe between the dome ends of the magnet. Three splices are made within the magnet.The half-cell is split into two groups: the first, a group of three dipoles, and the second, two dipoles and a quadrupole. See Figure 6.

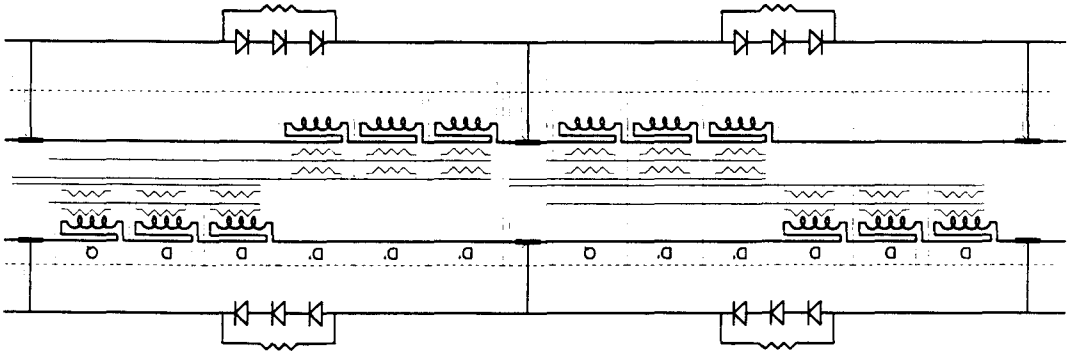

Figure 6. SSC Magnet Connection Scheme.

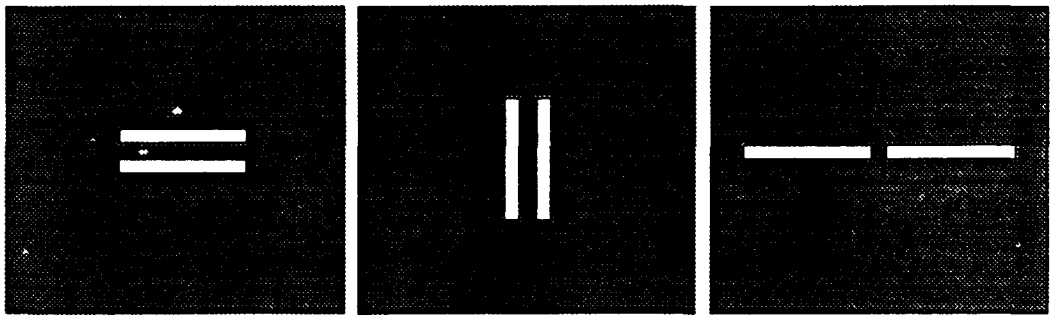

Up-Down Orientation Vertical Orientation Horizontal Orientation

Figure 7. Possible Configuration of Leads in Bus Slot.

MAGNETIC FIELD QUALITY CALCULATIONS

Field quality calculations for the three possible arrangements of the conductor in the bus slot have been completed. These calculations were published by Ramesh C. Gupta in SSC Note SSC-MD-232. Gupta considered the placement of the leads in the bus conduit in the vertical, horizontal, and up-down configuration (see Figure 7). Gupta used the computer codes POISSON and MDP to analyze these configurations and was able to show that the up-down configuration produced the least change in field harmonics.

STRESS CALCULATIONS FOR EARLY EXPANSION LOOP

The initial stress calculations for the expansion loop were done for a design where the superconductor was soldered to a solid copper bar of 1.1 cm^2 cross-section. To keep the stresses in the copper bar low and thus increase fatigue life of the copper bar, the loop was to be compressed 25 mm and then expanded 50 mm. This would keep the stress in the copper below a value of 138 MPa (20 Ksi) while still providing the expansion required. The limit of 138 MPa was set to maximize the fatigue life of the copper and was based on experience at Brookhaven National Laboratory. The ANSYS model used to calculate the stresses is shown in Figure 8. The magnitudes of the Von Mises stresses are shown in Figure 9. The design currently proposed by the MIT design team involves the use of a composite "H" beam and two "C" beams formed into the loop for the support of the leads in the expansion loop. A stress analysis of that configuration has yet to be done, but the design has been cycled several times at room temperature and appears to give very satisfactory results.

RADIATION DAMAGE OF SUPPORT MATERIALS

The composite materials used to make the expansion loop support sections must be resistant to gamma radiation at a level of 10E+6 Gy. The problems associated with this requirement include both the high level of radiation damage and the fact that the irradiation occurs while the material is cold (4.0 K). Many composite materials are based on the formation of polymer chains and the high-energy ionizing radiation will both break the polymer chains and create free radicals which further break the chains and cause cross-linking. The cross-linking will then cause the polymer to become brittle and/or change other properties. The amount of damage can be reduced by using filler materials (additives) which do not form polymer chains. Examples of these are inorganic materials such as aluminum oxide, magnesium oxide, mica, and quartz. The amount of damage to the composite can be further reduced by selecting polymers which form ring structures or complex hierarchical structures. The study of radiation damage for the SSC will be an continuing program for the materials group of the Magnet Systems Division.

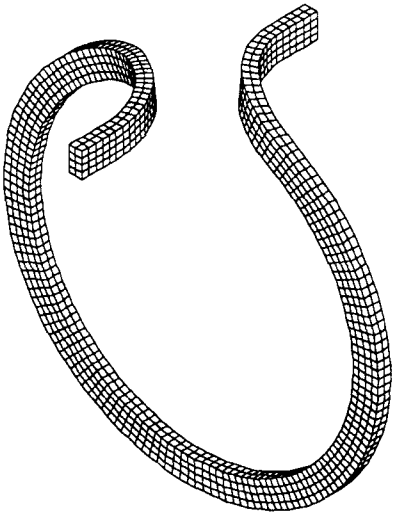

Figure 8. ANSYS Model of Copper Expansion Loop.

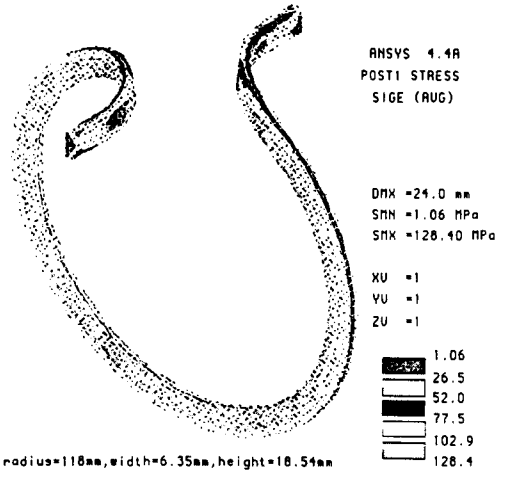

Figure 9. Von Mises Stresses in Copper Expansion Loop.

REFERENCES

1. *Requirements and Specifications for 50mm Collider Dipole Magnet*, Superconducting Super Collider Laboratory, October 10, 1990.