SSCL-379

SSCL-379

Superconducting Super Collider Laboratory

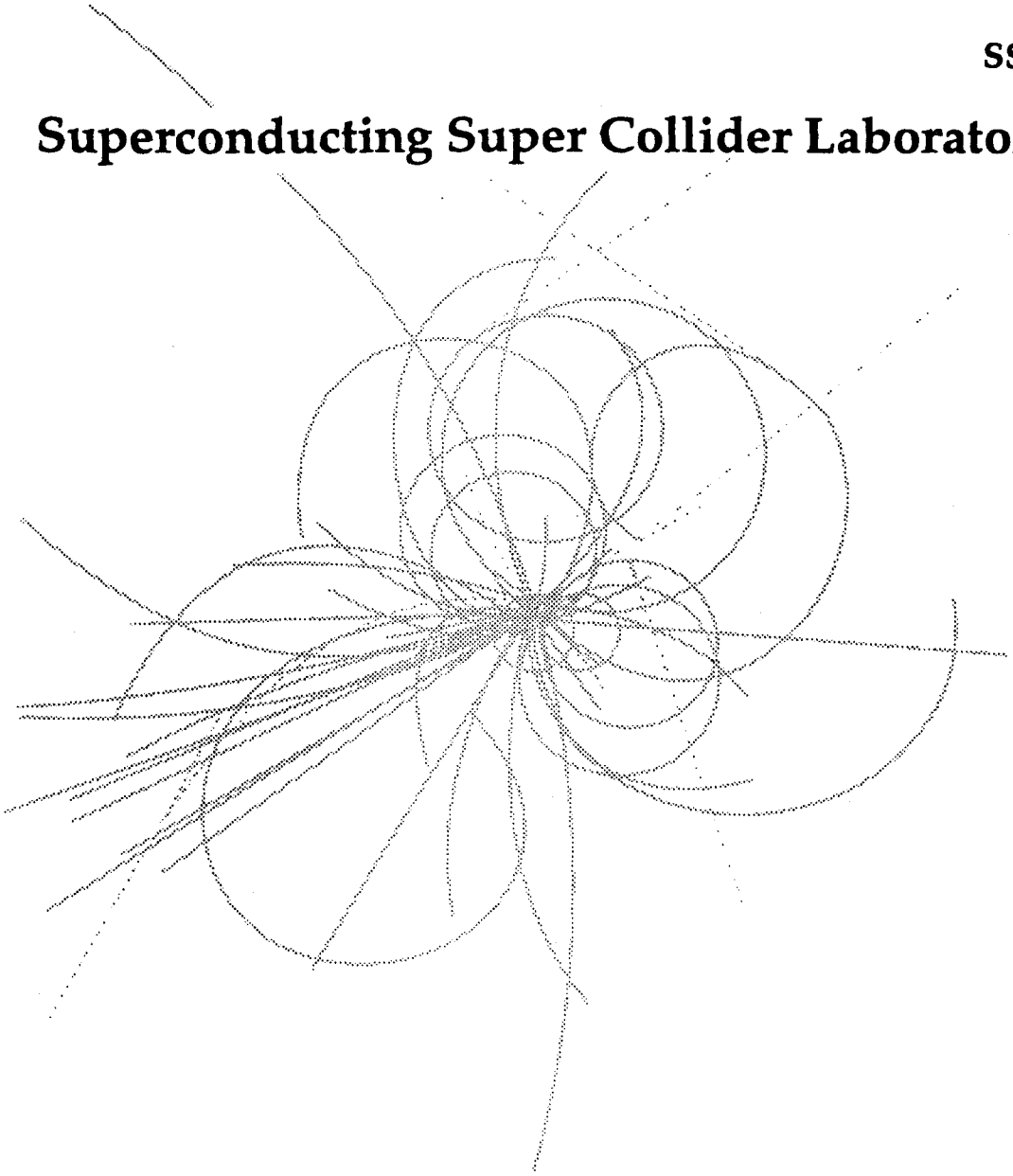

Linac RF Systems for the SSC

J. Ferrell

March 1991

To be published in Supercollider 3, Plenum Press, New York

SSCL-379

Linac RF Systems for the SSC*

J. H. Ferrell

Accelerator Division
Superconducting Super Collider Laboratory†
2550 Beckleymeade Ave.
Dallas, TX 75237

March 1991

---

*Presented at the 1991 International Industrial Symposium on the Super Collider, Atlanta, Georgia, March 13-15, 1991.

†Operated by the Universities Research Association, Inc., for the U.S. Department of Energy under Contract No. DE-AC02-89ER40486.

LINAC RF SYSTEMS FOR THE SSC

J. H. Ferrell

Superconducting Super Collider Laboratory*
2550 Beckleymeade Avenue
Dallas, Texas 75237

Abstract: An overview of the RF system design for the SSC Linear Accelerator is presented. The RF systems for the Radio Frequency Quadrupole, Drift Tube Linac, Coupled Cell Linac, and bunchers are described. Performance requirements for each system are presented. The Linac low-level RF amplitude and phase control concept is described, as is the Linac RF control system design concept. Present RF system design status and plans are also presented.

LINAC RF SYSTEM GENERAL DESCRIPTION

The SSC Linear Accelerator (Linac) provides the RF energy for accelerating the 0.035 MeV beam from the ion source to the 600 MeV level for injection into the Low Energy Booster (LEB). Figure 1 is a block diagram of the Linac.

For reliability purposes, two ion sources are planned, each with its associated Radio Frequency Quadrupole (RFQ) and buncher. The RFQ accelerates the beam to 2.5 MeV. The buncher following each RFQ and the two bunchers preceding the Drift Tube Linac (DTL) match the output longitudinal emittance of the RFQ to the DTL.

The DTL accelerates the beam to 70 MeV and is followed by two bunchers for matching to the coupled cell Linac (CCL). The CCL accelerates the beam to 600 MeV. The CCL is followed by an energy compressor located in the transport line between the Linac and the LEB. Table 1 describes the general requirements for the Linac RF system.

The RF system operates at the ninth harmonic of the LEB injection frequency through the DTL. The bunchers following the DTL, the CCL, and the CCL/LEB compressor operate at the third harmonic of 427.617 MHz, namely 1282.851 MHz. For simplicity, the frequencies are often referred to as 428 MHz and 1284 MHz. Initially the RF frequency will be generated within the Linac RF system. At some future date, the Linac system may be locked to the LEB injection frequency.

*Operated by the Universities Research Association, Inc., for the U.S. Department of Energy under Contract No. DE-AC02-89ER40486.

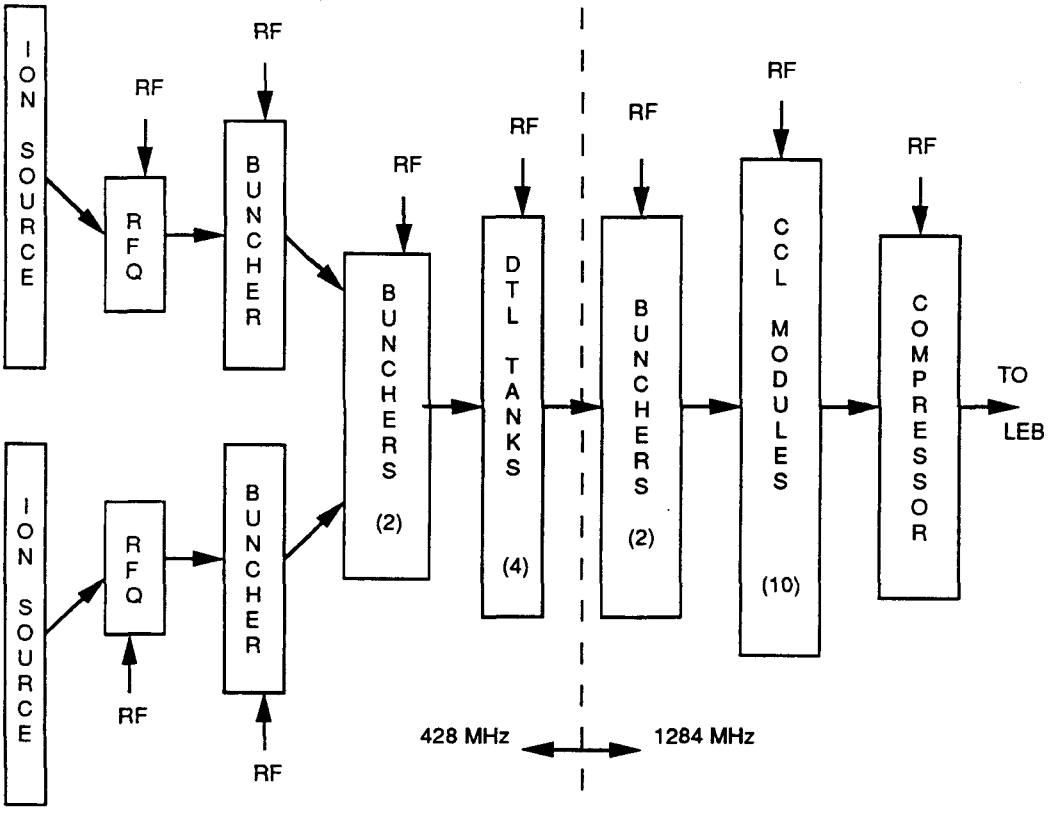

Figure 1. Linac Block Diagram.

Table 1. General Requirements—Linac RF System.

Input Energy	0.035 MeV (from source)
Output Energy	600 MeV
Beam Current	
Input	30 mA
Output	25 mA
RF Frequency	427.617 (428) MHz 1282.851 (1284) MHz
RF Frequency Stability	Less than 1 part in 10^8 or locked to LEB
Pulse Repetition Rate	10 Hz (1-10 Hz capability)
Beam On Time	7 μsec for Collider mode, 35 μsec for test mode
RF Voltage Stability	
Amplitude	≤ 0.5%
Phase	≤ 0.5 degrees

As indicated in Table 1, the Linac RF system is a pulse RF system with a low duty factor; therefore, the average power requirements are quite low compared to the peak power required.

The RF voltage amplitude and phase stability requirements are quite stringent and represent one of the major influences on the RF system design. All of the amplifiers and modulators must be designed with the stability requirements in mind.

Figure 2 is a block diagram appropriate to either the RFQ or the bunchers following. Each RFQ and buncher amplifier will have its own amplitude and phase control system. Local control and monitoring will be provided at each amplifier station. A transfer switch and dummy load will be provided at each amplifier for test purposes. This will be the case for all Linac amplifier stations.

Table 2 describes the RFQ RF requirements. The peak power required is within the capability of gridded tubes or klystrons.

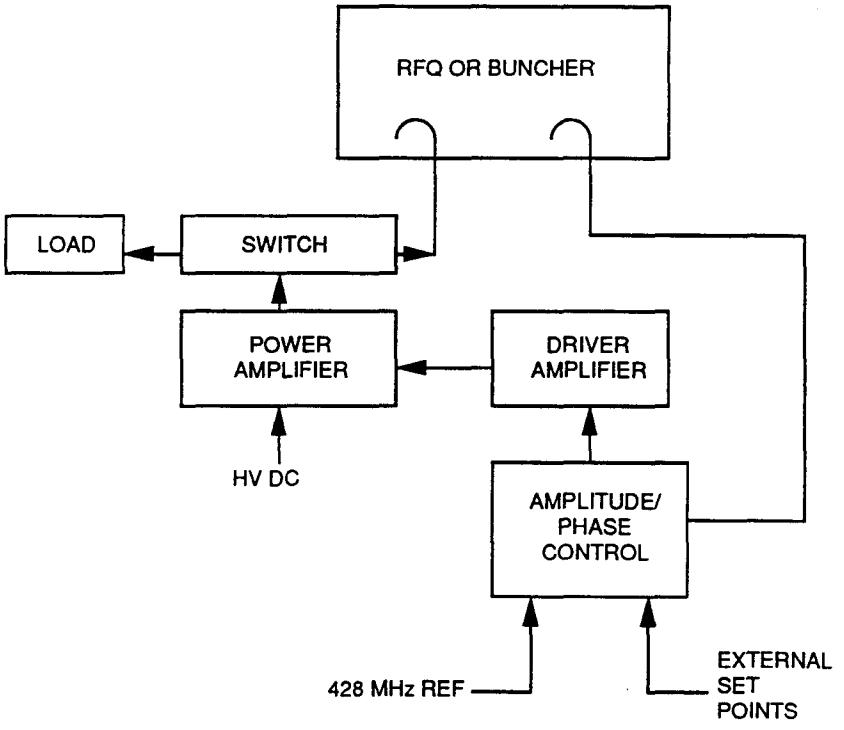

Figure 2. Block Diagram—RFQ or Buncher RF System.

Table 2. RFQ Requirements.

Number of RFQs	2
RF Frequency	427.617 MHz
Tank Q	7500
Peak RF Power Required	419 kW
Amplifier Power Capability	600 kW
Amplifier Bandwidth	500 kHz minimum
Amplifier Type	Gridded tube or klystron
RF Pulse Length	50 μsec

Table 3 describes the RFQ/DTL buncher RF requirements. The peak power required is within the capability of solid state or gridded tube amplifiers.

Table 3. RFQ/DTL Buncher Requirements.

Number of Bunchers	4
Tank Q	10,000
RF Frequency	427.617 MHz
Peak RF Power Required	22.5 kW, 22.5 kW, 13.3 kW, 0.8 kW
Amplifier Power Capability	30 kW, 30 kW, 20 kW, 2 kW
Amplifier Bandwidth	1 MHz minimum
Amplifier Type	Solid state or gridded tube
RF Pulse Length	50 μsec

Figure 3 is a block diagram applicable to either a DTL or CCL RF station. The first CCL station differs somewhat, as will be described later.

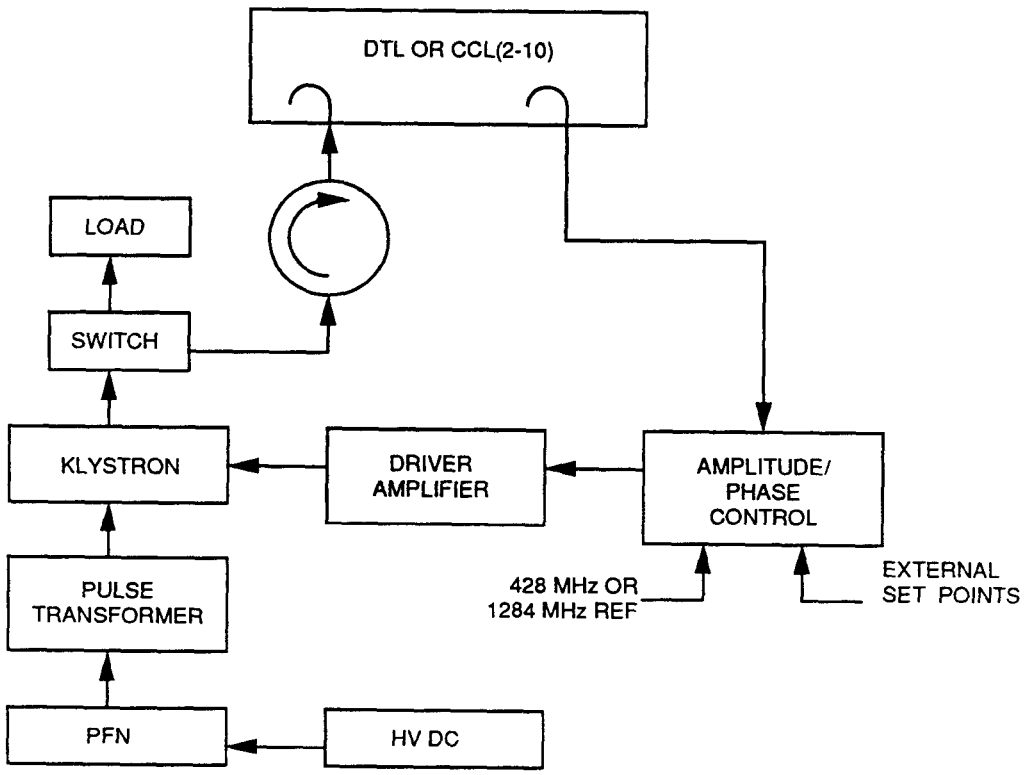

Figure 3. Block Diagram—DTL or CCL (2-10).

There are four DTL RF stations. Each is a klystron amplifier capable of providing 4 MW peak power. Due to the higher Q of the tanks, the RF pulse length is longer for the DTL. Each DTL station consists of the klystron amplifier and associated HV power supply, modulator, solid state driver amplifier, and amplitude/phase control loops. An isolator is provided between the klystron and the cavity at each station. The klystrons will be cathode modulated by a line type modulator. Present plans include a DTL test RF station for the purpose of maintaining a "hot" spare klystron. Table 4 describes the DTL RF system requirements.

Table 4. DTL Requirements.

Number of Tanks	4
RF Frequency	427.617 MHz
Tank Q	35,000
Peak RF Power Required	3 MW
Amplifier Power Capability	4 MW
Amplifier Bandwidth	500 kHz minimum
Amplifier Type	Klystron
RF Pulse Length	100 μsec maximum

CCL RF stations 2 through 10 are similar in concept to the DTL RF stations. The klystrons are cathode modulated by line type modulators. A test CCL station is also planned. Table 5 describes the CCL RF system requirements.

Table 5. CCL Requirements.

Number of Modules	10
Tank Q	15,000
RF Frequency	1282.851 MHz
Peak RF Power Required	15 MW
Amplifier Power Capability	20 MW
Amplifier Bandwidth	1 MHz minimum
Amplifier Type	Klystron
RF Pulse Length	50 μsec

As mentioned previously, the first CCL station is configured differently from stations 2-10. Figure 4 shows the first CCL station configuration. The klystron output will be divided to provide RF power to the two bunchers between the DTL and CCL as well as to the first CCL.

A motorized phase adjustment will be provided in the feed to each buncher. Analysis is in progress to determine if the amplitude and phase stability requirements can be met using this configuration. If not, a separate amplifier will be required for each buncher. Table 6 describes the buncher requirements.

The single CCL/LEB compressor RF station is located on the transport line between the CCL and the LEB. This system is a lower power system, presently planned for 100 kW peak power output. Studies are underway to determine if any economic advantage is achieved in reducing the power requirement by increasing the number of cells in the accelerating structure. Table 7 describes the compressor RF requirements as presently envisioned.

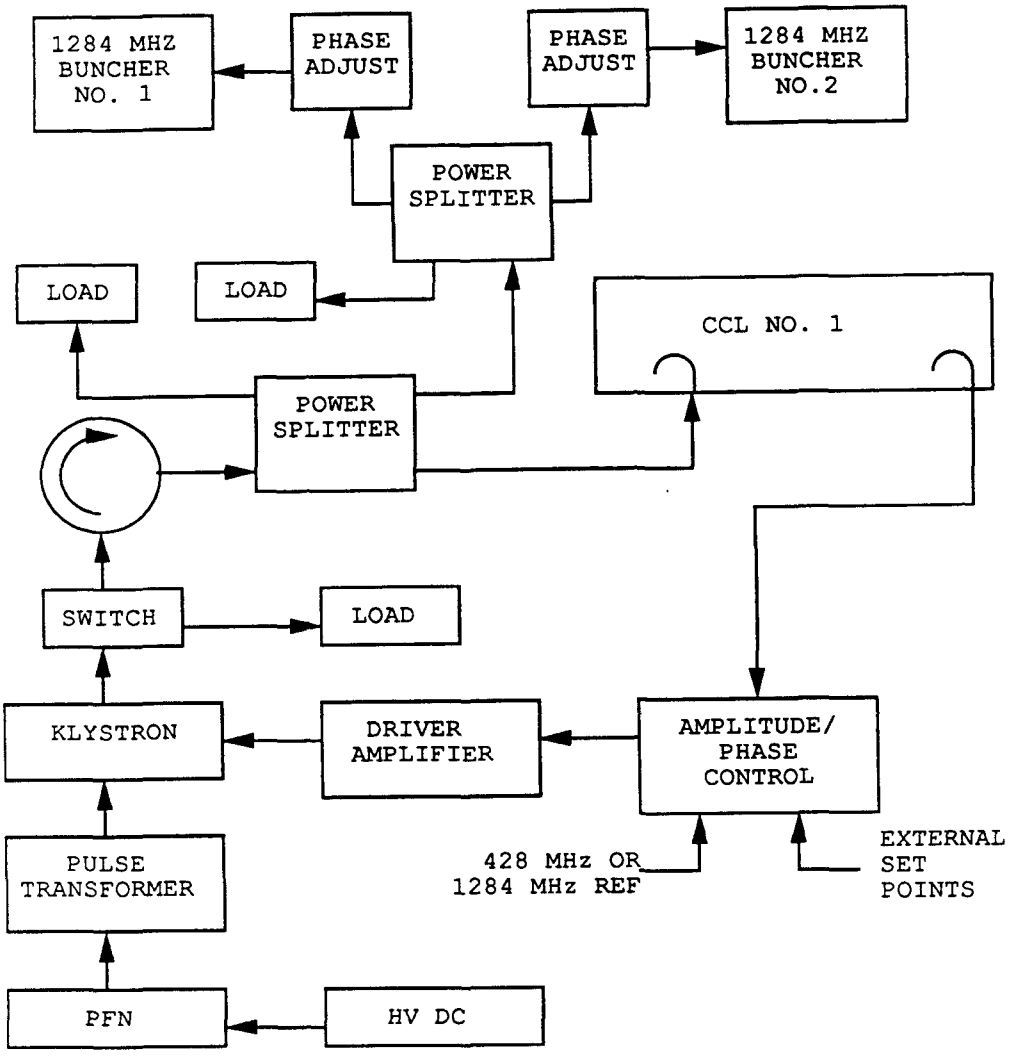

Figure 4. Block Diagram—1284 MHz Bunchers and CCL No. 1.

Table 6. DTL/CCL Buncher Requirements.

Number of Bunchers	2
Tank Q	15,000
RF Frequency	1282.851 MHz
Peak RF Power Required	250 kW, 125 kW
Amplifier Type	Power derived from first CCL

Table 7. CCL/LEB Compressor Requirements.

Tank Q	15,000
RF Frequency	1282.851 MHz
Peak Power Required	50 kW
Amplifier Power Capability	100 kW
Amplifier Bandwidth	1 MHz minimum
Amplifier Type	Gridded tube or klystron
RF Pulse Length	50 μsec

The low level portion of the LINAC RF system includes the amplitude and phase control loops as well as the RF frequency distribution system. Figure 5 is a generic block diagram applicable to each RF amplifier station.

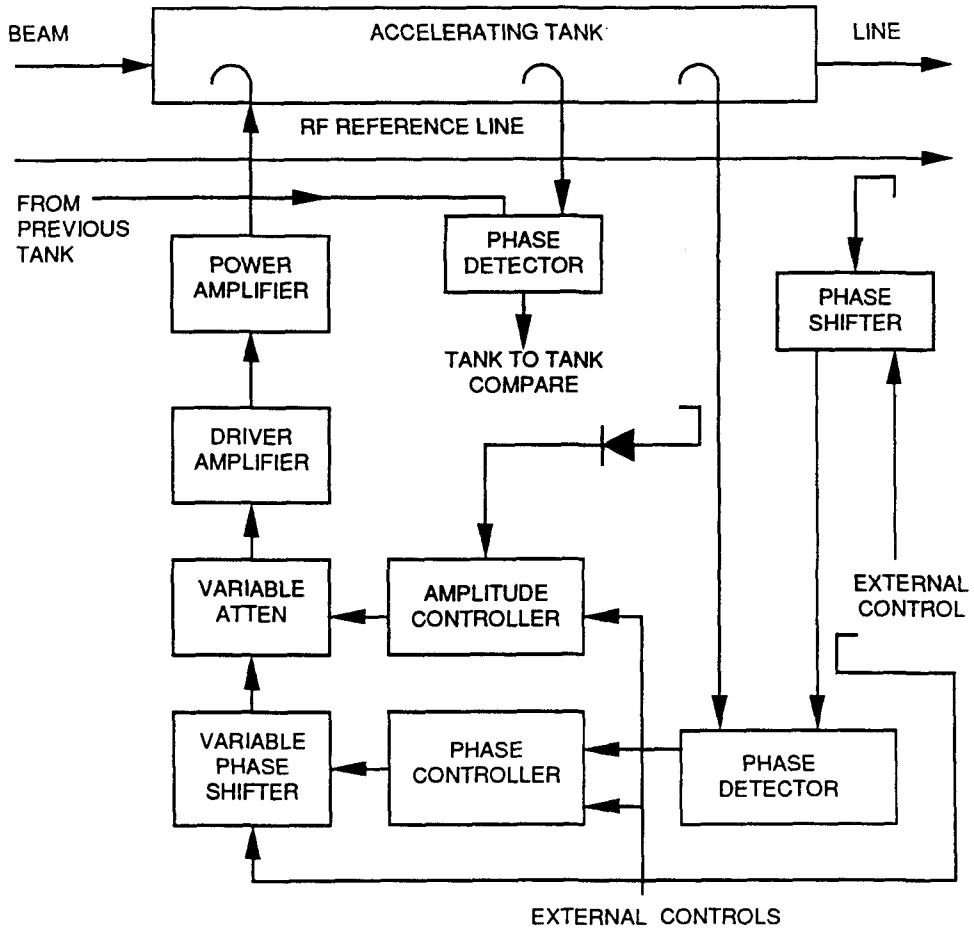

Figure 5. Block Diagram—Generic Low Level RF.

Pressurized and temperature-controlled rigid coax lines, located in the beam tunnel, will be used for frequency distribution. Since the RF voltage stability is directly dependent on the stability of the reference frequency, maintaining tight temperature control of these two lines (one for each frequency) is critical. The phase and amplitude detectors will also be located in the tunnel and will be temperature-controlled.

The Linac RF system will have its own control system. Figure 6 is a block diagram of the envisoned control system.

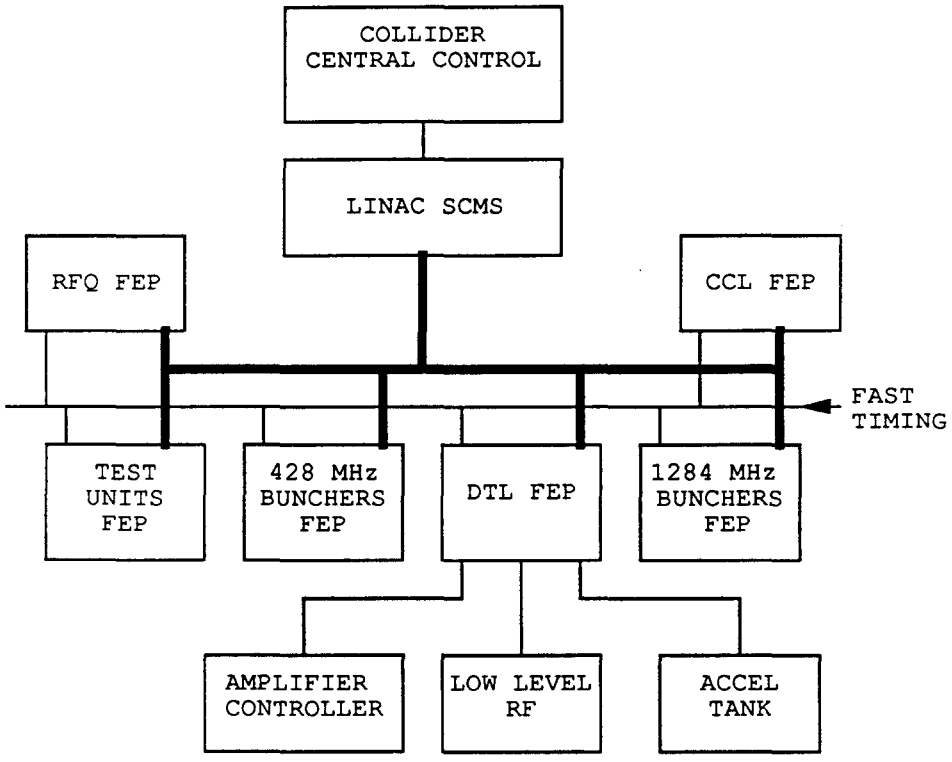

Figure 6. Block Diagram—Linac RF Control.

The Supervisory Control and Monitor System (SCMS) will provide communication with the Collider Central Control and will also provide supervisory control and monitoring of the Linac RF system during testing and commissioning. This unit is presently planned to be a Unix type workstation.

Each Linac segment will have a Front End Processor (FEP) which communicates with the SCMS and the local controller at each RF station in its segment. The FEPs will be configured as VME/VXI crates and will also distribute the fast timing signals from the Collider timing system to the RF stations.

STATUS AND PLANS

The SSC plans to procure the amplifier and modulator systems from industry. Procurement specifications are being prepared for each system as the design progresses. The high-power klystron specification should be released to industry in March or April 1991. The modulator specifications for these klystrons are nearing completion and will be finalized and

released as soon as klystron vendors are selected. High power RF components will be specified once the final spatial relationship between the beam tunnel and RF gallery is known.

A computer model and prototype of the amplitude and phase control loops is in progress. Present plans call for design of the low level RF system by SSC personnel with build-to-print procurement following successful prototype tests. A detailed analysis of the supervisory control requirements is also in progress. The Linac control system will be designed by SSC personnel utilizing standard industry boards whenever practical.

ACKNOWLEDGEMENT

The author gratefully acknowledges the contributions of D. Dohan, J. Grippe, E. Marsden, R. Rodriguez and J. Wallace in providing information for this paper.