SSCL-278

Superconducting Super Collider Laboratory

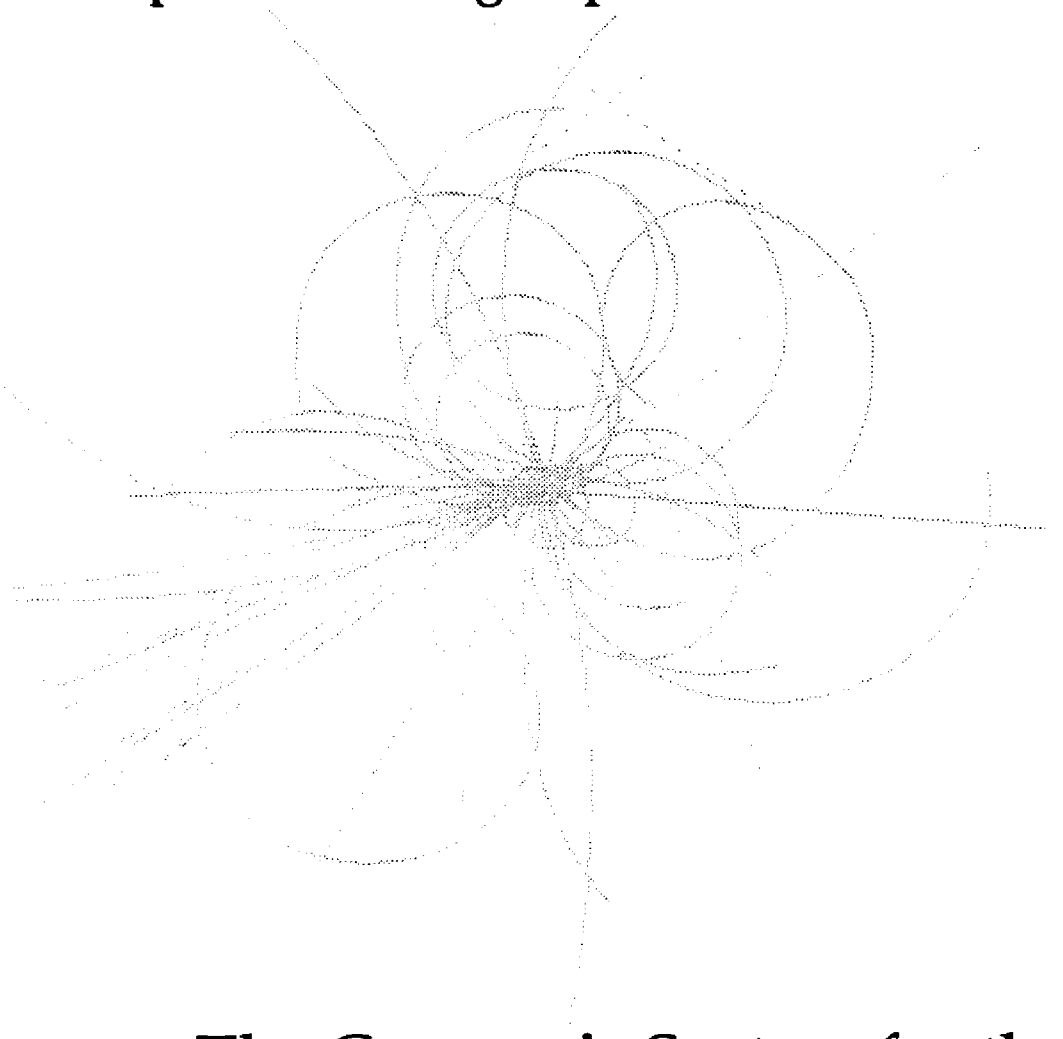

The Cryogenic System for the SSC Magnet Test Laboratory

R. Byrns, B. Heer, P. Limon, M. McAshan, J. Rasson and P. VanderArend

August 1990

SSCL-278

THE CRYOGENIC SYSTEM FOR THE SSC MAGNET TEST LABORATORY*

R. Byrns, B. Heer, P. Limon, M. McAshan, J. Rasson
and P. VanderArend

Superconducting Super Collider Laboratory†
Accelerator Division
2550 Beckleymeade Avenue
Dallas, Texas 75237

August 1990

*Presented at the International Industrial Symposium on the Super Collider, Miami Beach, Florida, March 14–16, 1990.

†Operated by the Universities Research Association, Inc., for the U.S. Department of Energy under Contract No. DE-AC02-89ER40486.

THE CRYOGENIC SYSTEM FOR THE SSC MAGNET TEST LABORATORY[1]

R. Byrns, B. Heer, P. Limon, M. McAshan, J. Rasson and
P. VanderArend

Superconducting Super Collider Laboratory*
Accelerator Division
2250 Beckleymeade Avenue
Dallas, TX 75237

INTRODUCTION

The fabrication of a large series of magnet development models, 70 pre-production models (beginning in 1993), as well as many thousands of production magnets requires the early construction of a Magnet Test Laboratory (MTL) to provide the testing capability for design, quality control and acceptance testing. The exact testing protocol is still in planning, although outlines of the magnet test program are sufficiently well understood to permit development of the performance and fabrication specifications for the MTL.

The requirement for production testing begins with the imminent need to test prototype and pre-production dipoles. The magnet production rate will rise to a peak level of 2,500 per year and all of the magnet production is to be completed at the end of fiscal 1997. The total dipole number in the two rings of the collider is about 9000 and there is one quadrupole for every five dipoles. Testing in the MTL will be performed on between 10 and 20 percent of the magnets with the larger percentage being tested early in the production period.

In addition to the production magnets of the collider, there are many other kinds of superconducting magnets in the SSC complex that will require prototyping and production testing. These include dipoles and quadrupoles for the High-Energy Booster Ring, vertical and combined dipoles and special-purpose quadrupoles for the IRs. The SSC program also has a need to test such components as recoolers and completed spool pieces either as part of the development of such components, or as part of the quality control of their manufacture.

*Operated by the Universities Research Association, Inc., for the U.S. Department of Energy under Contract No. DE-AC02-89ER40486.

MAGNET TEST PROGRAM

The accelerator magnet assembly consists of a cold mass (beam tube, superconducting coils, stainless steel collars, and iron yoke) installed in a cryostat (0.6 m dia. × 15 m long). A cross section of the magnet is shown in Figure 1. The cold mass contains passages for supercritical liquid helium flow that maintains the superconducting coils near 4 K. The weight of each cold mass, roughly eight tons, must be supported by posts that extend into the warm outside world, but limit the leakage of heat into the cold regions.

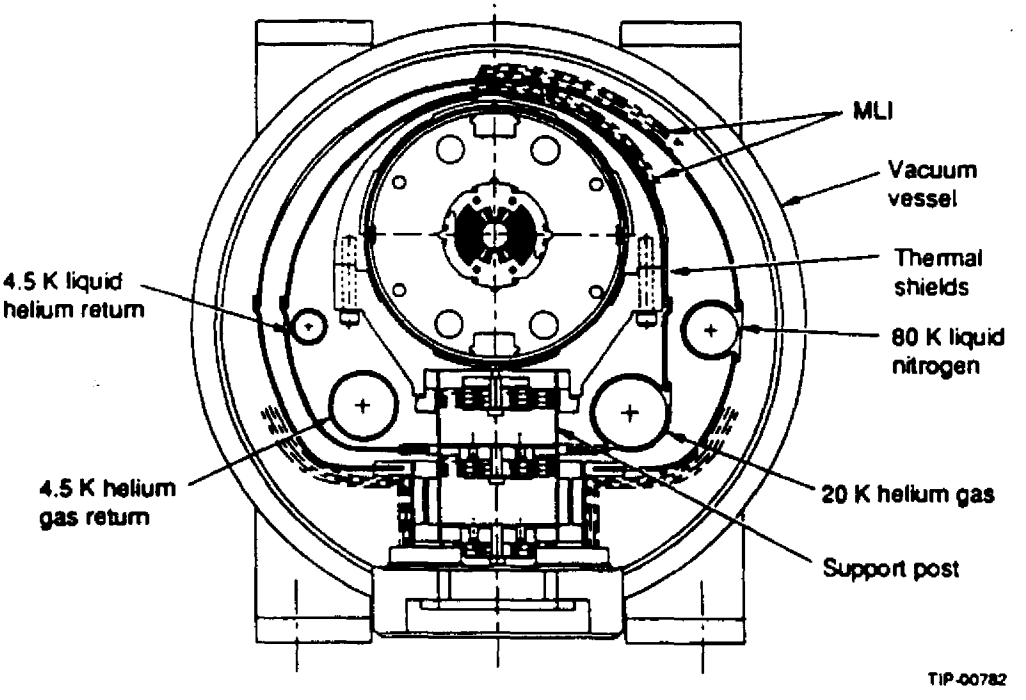

Figure 1. Magnet Cross Section.[2]

Table 1 lists a preliminary sequence for production cold testing of dipoles. A single magnet is a component and is not capable of stand-alone operation. In order to carry out the testing program, the magnet is installed on a test stand. The stand completes the electrical, mechanical, and cryogenic systems of the magnet and provides the operating environment needed for the testing. The stand also contains instrumentation necessary to verify the operating conditions and to determine the behavior of the magnet under test. Although locations and instrumentation for warm tests must be provided, the cold testing sequence is the critical path in the operation of MTL and determines its schedules.

The total cold testing cycle for a single magnet takes six days, therefore the throughput per test stand is five magnets per month. Six stands are needed to satisfy the basic system requirement of 30 per month. Under these conditions, a single additional stand is needed for quadrupoles, and together with three stands for R&D testing, the MTL needs to have 10 test stands in total.

Table 1. Preliminary Magnet Test Sequence 3-Shift Operation

Activity	Sequence Duration, hrs	Total
Prepare Stand, Place, and Align Magnet	2	2
Weld Beam Pipe	2	4
Wiring Connection and Checkout	16	20
Leak Check Beam Pipe		
Install Warm Bore		
Connect Leads		
Weld Small Cryostat Piping		
Air HiPot		
Weld Remaining Cryostat Piping	1	21
Leak Check	12	33
Pump and Purge		
Wiring Check	1	34
Install Shields	2	36
Install Vacuum Bellows	12	48
Pump Cryostat		
Leak Check		
Helium HiPot		
Allowance for Delay	8	56
Cooldown	8	64
Instrument Check & Evaluation		
Quench Protection System Setup		
Magnet Testing	48	112
Quench Testing		
Magnetic Field Measurement		
Allowance for Delay	8	120
Warmup	12	132
Remove Vacuum Bellows and Shields	3	135
Cut Piping and Single Phase Bellows	4	139
Wiring Inspection and Disconnection	1	140
Disconnect Beam Pipe	1	141
Remove Magnet	1	142
Allowance for Delay	2	144

The following types of tests are expected to be conducted at the SSC Magnet Test Laboratory:

(1) Cryogenic Tests
- (a) Vacuum and mechanical integrity of the cryogenic system throughout the operating range.
- (b) Magnet cooldown and warmup rates; temperature differences.
- (c) Pressure drop in cryostat as a function of mass flow.
- (d) Heat loads at 4 K, 20 K, and 80 K and simulation of synchrotron radiation loads.
- (e) Half-cell tests (five dipoles, one quadrupole, one spool piece).

(2) Magnet Tests
- (a) Dipole quench characteristics.
- (b) Dipole field quality at operating temperatures.
- (c) Magnet electrical integrity tests, including insulation tests (short circuits), power leads, and sensing elements.
- (d) Magnet vibration during operation (around 5 Hz).
- (e) Other magnets including special dipoles, quadrupoles, and correction elements.

(3) Tests of Other Equipment
- (a) Spool pieces and recoolers.
- (b) Liquid helium circulating pumps.

DESCRIPTION OF THE MAGNET TEST LABORATORY

Figure 2 shows a block diagram of the MTL refrigeration system. Following is a list of equipment for the MTL.

(a) Helium gas storage system with a storage capacity of 3,500 std. m^3 at 18 bar, 20°C.

(b) Helium refrigerator/liquefier system with a capacity of 2000 W at 4.5 K and 20 g/s of liquid helium. The staged compressors are oil-flooded rotary screw compressors with full oil removal. Two parallel sets are selected for efficient turn-down and redundant reliability. The cold box thermal cycle is dual pressure which has the potential for:
1. Turbine isolation from quench pressure excursions.
2. Contributes to better efficiency with a better match to staged compressors.
3. Minimizes the compressor sizing for the first stage.

(c) Liquid helium dewar with a volumetric capacity of 40,000 liquid liters and a gas ullage of 4 m^3. The dewar also serves as a quench tank capable of allowing the system to handle a rapid succession of quenches occurring at a rate of 20 quenches per 8 hours.

(d) Liquid helium pump system which consists of two circulation pumps with total flow rate of 500 g/s at 0.5 bar differential pressure and a booster pump providing 200 g/s at 3.0 bar differential pressure. The system also includes precooler, after-cooler and surge vessels.

(e) Test stand distribution system with individual subcooler for each test stand. The distribution system is suitable for five test stands and a future expansion capability of another five test stands. Each subcooler is capable of providing 100 g/s at 3.6 K or 50 g/s at 2.5 K.

(f) Cleanup, cooldown, warmup, and purification system (CCWP) capable of providing 110 g/s of pure helium mass flow rate at any temperature between 80 K and 300 K. This system consists of gas storage, compressors and CCWP modules. Table 2 shows the requirement of the CCWP functions.

Table 2. CCWP Function Requirements.

Case	Mass flow [g/s]	Supply temperature [K]
cleanup	15	300
cooldown	80	77–300
warmup	50	300
purification	10	300

(g) Refrigeration recovery module consisting of warm or cold vacuum pumps and a heat exchanger system. This system is capable of maintaining the low pressure in the subcoolers and also recovers refrigeration from the subcoolers' sub-atmospheric streams.

(h) Liquid nitrogen tank and distribution system suitable for providing the magnets shield and other modules with 77 K LN supply.

(i) Interconnecting vacuum insulated transfer lines.

(j) Control system consisting of instrumentation, data acquisition and process control hardware and software.

Figure 3 shows the proposed equipment layout and floorplan for the MTL and also the ASST (Accelerator System String Test).together with ten test stands for magnets and other test components.

REFERENCES

1. RFP-SSC-90A-01107, Superconducting Supercollider, Request for Proposal. MTL Cryogenics System. Section 2, Technical Specification.

2. *Supercollider 1*, Proceedings of the International Industrialization of Superconducting Super Collider, New Orleans, 1989.

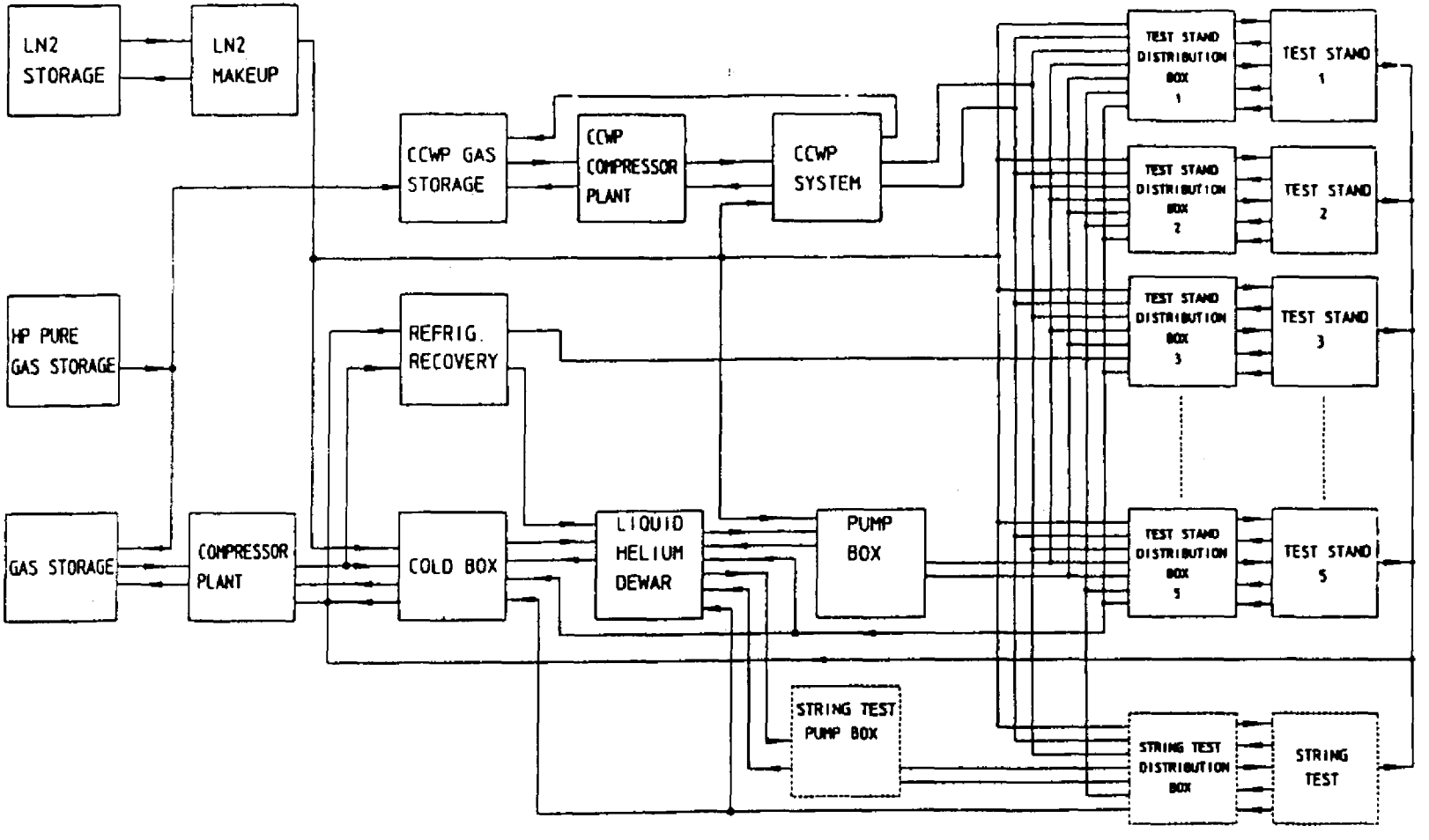

Figure 2. Block Diagram of MTL Refrigeration System.

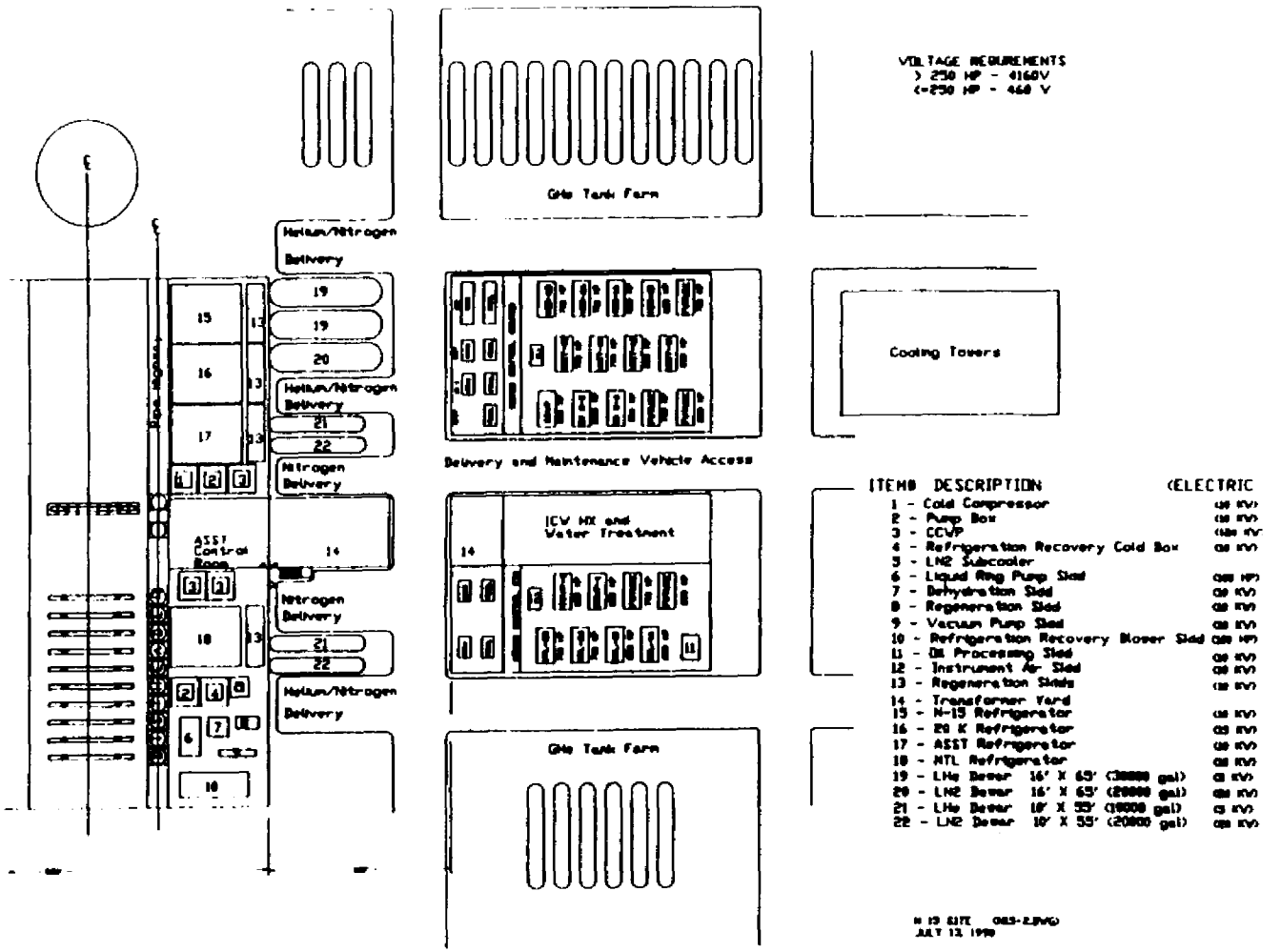

Figure 3. MTL Floor Plan and Equipment Layout.

REFERENCES

1. Section 2. Technical Specification Superconducting Super Collider Request for Proposal MTL Cryogenics System-11/89

2. Supercollider 1 Proceedings IISSC, New Orleans, 89