Attachment A
SSCL-275

PHYSICS AND DETECTOR SIMULATION FACILITY

SPECIFICATIONS

Computer Acquisition Working Group*

Superconducting Super Collider Laboratory†
2550 Beckleymeade Ave.
Dallas, Texas 75237

May 10, 1990
Revision July 1990

*G. Chartrand, L. R. Cornell, R. Hahn, D. Jacobson, H. Johnstad, P. Leibold, M. Marquez, B. Ramsey, L. Roberts, B. Scipioni, N. Shivapuja, G. Yost

†Operated by the Universities Research Association, Inc. for the U.S. Department of Energy under Contract No. DE-AC02-89ER40486.

Table of Contents

1. Introduction 1
1.1 Overview 1
1.2 Motivation 2
1.3 Technique 2
1.3.1 Physics Simulation 2
1.3.2 Detector Simulation 3
1.3.3 Detector Design 3
1.4 Philosophy 3
2. Functional Requirements 5
2.1 Physics Requirements 5
2.1.1 Event Generation 5
2.1.2 Detector Simulation 5
2.1.3 Data Reduction and Analysis 6
2.2 Users' Requirements 6
2.2.1 External Users 6
2.2.2 Local Users 7
2.2.3 User Model 7
2.3 Functional Model 8
2.3.1 Front End Network 8
2.3.2 File Server 8
2.3.3 Batch Processing Ranch 10
2.4 Operational Model 10
2.5 Graphics 11
2.5.1 HEP Graphics Application 11
2.5.2 Graphics Standards 11
2.5.3 Basic Graphics Library Functions 12
3. Detailed Requirements 13
3.1 Hardware Requirements 13
3.1.1 Front End Network 13
3.1.1.1 CPU 13
3.1.1.2 Memory 13
3.1.1.3 Disk subsystem 13
3.1.1.4 Monitors 14
3.1.1.5 Network interfaces 14
3.1.1.6 Console ports 14
3.1.1.7 Console concentrator. 14
3.1.2 File Server 14
3.1.2.1 CPU 14
3.1.2.2 Memory 14

3.1.2.3 Disk subsystem 14
3.1.2.4 Tape subsystems 14
3.1.2.5 Network interfaces 14
3.1.3 Batch Processing Ranch 14
3.1.3.1 CPUs 15
3.1.3.2 CPUs/interprocess communication 15
3.1.3.3 Shared memory 15
3.1.3.4 Network interfaces 15
3.1.3.5 Disk subsystems 15
3.1.3.6 Tape subsystem 15
3.1.4 Automatic Tape Handling System 15
3.2 Operating System Requirements 15
3.2.1 General Requirements 15
3.2.1.1 O/S types 16
3.2.1.2 Required Extensions 16
3.2.1.3 Reconfiguration 16
3.2.1.4 Device Drivers 16
3.2.1.5 Source Code 16
3.2.1.6 Process Priority 17
3.2.1.7 System Monitoring 17
3.2.1.8 Internet Domain Name Service 17
3.2.1.9 Remote Procedure Call 17
3.2.1.10 Network File System 17
3.2.1.11 Yellow Pages 17
3.2.1.12 Signals 17
3.2.1.13 Disk Quota System 17
3.2.1.14 REXEC 17
3.2.1.15 Console Messages 17
3.2.1.16 System Loading Capability. 17
3.2.1.17 IEEE Floating Point Standard. 18
3.2.2 Front End Network 18
3.2.2.1 File Systems 18
3.2.2.2 Operating System Size. 18
3.2.2.3. User License 18
3.2.3 File Server 18
3.2.3.1 File Systems 18
3.2.3.2 User License 18
3.2.4 Batch Processing Ranch 18
3.2.4.1 Symmetric MultiProcessing 18

3.2.4.2 Process Locking 19
3.2.4.3 File Systems 19
3.2.4.4 User License 19
3.2.4.5 Cooperative Processing Software 19
3.3 Software Requirements 19
3.3.1 Compilers 19
3.3.2 Linkers 20
3.3.3 Debuggers 20
3.3.4 Network Utilities 20
3.3.5 Backup/Archive 20
3.3.6 Shell 20
3.3.7 Tape Management 20
3.3.8 X Window System 21
3.3.9 Graphical User Interface 21
3.4 Graphics Requirements 21
3.4.1 Entry-Function or Mid-Range Graphics Adaptor 21
3.4.1.1 Graphics Capabilities 21
3.4.1.2 User Interface 21
3.4.1.3 Graphics Performance 23
3.4.2 High-End Graphics Adaptor 23
3.4.2.1 Graphics Capabilities 23
3.4.2.2 User Interface 23
3.4.2.3 Graphics Performance 23
3.4.3 Graphics software 24
3.4.3.1 Graphics Kernel System (GKS) 24
3.4.3.2 Programmer's Hierarchical Interactive Graphics System (PHIGS) 24
3.4.3.3 PHIGS+ and PEX 24
3.4.3.4 The X Window System (X) 24
3.4.3.5 Computer Graphics Metafile (CGM) 24
3.4.3.6 User Application Graphics Software 24
3.5 Network Requirements 24
3.5.1 Common Hardware Network Requirements 25
3.5.2 Common Protocol Requirements 25
3.5.3 Front-end Network Requirements 25
3.5.4 File Server Network Requirements 25
3.5.5 Batch Processing "Ranch" Network Requirements 25
3.6 Support Requirements 26
3.6.1 Maintenance 26
3.6.2 Training 26

3.6.3 Documentation 26
3.7 Operational Requirements 26
3.7.1 Size of footprint 27
3.7.1.1 Batch ranch processors. 27
3.7.1.2 File server. 27
3.7.1.3 Front End Network. 27
3.7.1.4 Automatic tape handling system. 27
3.7.2 Power. 27
3.7.2.1 Batch ranch processors. 27
3.7.2.2 File Server. 27
3.7.2.3 Front End Network. 27
3.7.3 Air conditioning requirements 29
3.7.3.1 Batch ranch processors. 29
3.7.3.2 File server. 29
3.7.4 Current 29
3.7.4.1 Batch ranch processors. 29
3.7.4.2 File server. 29
3.7.4.3 Networked front end. 29
4. Qualification Requirements 30
4.1 Benchmarks 30
4.1.1 SPEC 30
4.1.1.1 SPEC Benchmark Suite 30
4.1.1.2 Front End Network 30
4.1.1.3 File Server 30
4.1.1.4 Batch Processing Ranch 30
4.1.2 Disk 30
4.1.2.1 Front End Network 30
4.1.2.2 File Server 31
4.1.2.3 Batch Processing Ranch 31
4.1.3 Network 31
4.1.3.1 Front End Network 31
4.1.3.2 File Server 31
4.1.3.3 Batch Processing Ranch 31
4.1.4 NFS 31
4.1.4.1 Front End Network 31
4.1.4.2 File Server 31
4.1.4.3 Batch Processing Ranch 31
4.1.5 Physics Codes 31
4.2 Graphics Performance Demonstrations 32

REFERENCES 33
TRADEMARKS 33

List of Figures

Figure 2.1 Functional diagram (block diagram) of the simulation facility. 9
Figure 3.7 Operational requirements for the simulation facility. 27

List of Tables

Table 1.1 Physics and detector simulation facility acquisition plan. 2
Table 2.1 Summary of requirements for physics and detector simulation runs. 5
Table 2.2 Model of User Requirements. 8

PHYSICS AND DETECTOR SIMULATION FACILITY

SPECIFICATIONS

Computer Acquisition Working Group

1. Introduction

1.1 Overview

This document specifies the requirements for a computing facility needed to perform the physics and detector simulations for the design of Superconducting Super Collider (SSC) detectors, and other computations in support of physics and detector needs. Since the simulations will dominate the requirements, the rest of this document will concentrate on this process. Two types of Monte Carlo simulations will be performed at the facility: the first, to simulate the physics of the interactions that will occur at the SSC, and the second, to determine the simulated response of the detectors that will study these interactions. The calculations to be performed in each simulation are lengthy and detailed and could require many months per run on a VAX 11/780†† and may produce several Gbyte of data per run. Consequently, a distributed computing environment of networked high-speed computing engines, symmetric multi-processors, and storage elements shall be required to meet these needs. These networked computers will form the basis of a centralized facility for SSC physics/detector simulation work. The facility shall be developed and installed in several phases over a several year period[1,2,3]. The plan for purchasing and installing the major components of the facility is given in Table 1.1

†† While the application described by this specification requires an intensive amount of floating point processing, with some portion of it in double precision, it is often convenient to describe RISC-based CPUs in terms of integer MIPS. Consequently, for the purposes of this document a CPU capable of 1.0 integer MIPS will be considered to be the rough equivalent of a VAX 11/780 with an FPA.

Table 1.1 Physics and detector simulation facility acquisition plan.

	Phase I 10/90	Phase II 3/91	Phase III 3/92
Computing Power	500 MIPS	1000 MIPS	4000 MIPS
On-Line Storage	50 GB	100 GB	400 GB
Tertiary Storage	.75 TB	1.5 TB	6.0 TB

The remainder of this Section deals with the need for an SSC Laboratory (SSCL) simulation facility. In Section 2. a functional description of the facility and its use are provided. The list of detailed specifications (vendor requirements) is given in Section 3. and the qualifying requirements (benchmarks) are described in Section 4.

1.2 Motivation

The detectors to be constructed during the next few years to study the interactions produced by the Super Collider will be large and costly. A typical detector may be some 25 m in width and height by 40 m in length, weigh 30 K-tons or more, require about 6-8 years to construct, and cost several hundred million dollars. Careful thought and planning will be required to produce efficient, cost-effective designs for these detectors. It is not possible to test a proposed design fully in a scaled-down version. For example, the effect of the myriad of support structures, cabling, and plumbing connections can be critical in the design, but these effects cannot be tested in a scaled-down model. Consequently, the basic tool for determining the adequacy of a proposed design is the creation of a detailed computer model of the detector. Physics and detector simulations will be performed on the computer model using a high-performance computing system.

1.3 Technique

A several step modeling technique is employed. The physics interactions of interest (signal) and their backgrounds (noise) are generated, the detector is modeled, and the detector response to the physics input is calculated. Depending upon the simulated response of the detector, modifications may be incorporated into the design. The process is likely to be iterated several times and is likely to be computed in independent runs for each physics signal.

1.3.1 Physics Simulation. Several Monte Carlo programs such as ISAJET and PYTHIA have been written to simulate complete events at the SSC. These programs use known physics, i.e. the standard model "tuned" according to existing data, to generate lists of particles, including their energies, directions and types, both for potential signals and for their known backgrounds. A list of about ten physics "benchmark" signal processes has been identified. For each process the signal events as well as the background events must be generated. These simulated events can then be used to develop strategies for separating the signal from the background.

1.3.2 Detector Simulation. Once an analysis strategy has been developed, one must determine whether it will actually work with a proposed detector design. This requires simulating the response of the detector to the signal and background processes. Most of this work will probably be based on GEANT, which is a general purpose Monte Carlo program for detector simulation developed at CERN. Other more specialized detector simulations will also be performed. GEANT includes utilities for modeling the detector geometry and for simulating how each of the produced particles will interact with the various parts of the detector and what response it will produce. This information can then be used to analyze the signal and background events as in the real experiment. GEANT detector simulations are more demanding than the physics event generation and may require several hours per event on a VAX 11/780.

1.3.3 Detector Design. The results of the detector simulation Monte Carlo are used to revise the detector design. Modifications to the design are then tested within the simulation model to determine the effect of the modification. This process may be iterated many times.

1.4 Philosophy

The SSCL has adopted a policy that encourages and will foster the use of open environments for computing. The SSCL will require the use of open systems and industry standards where possible for operating systems, languages, utilities, and protocols. To meet this goal the Laboratory has decided to establish a computing environment which emphasizes the use of distributed, networked computing, graphics, and peripherals from multiple vendor sources. The SSCL is a member of the Open Software Foundation (OSF). The SSCL supports the efforts of OSF and will require the use of OSF technology as that becomes available. In particular, it is intended that the OSF/1 operating system will be installed as soon as possible. The SSCL will serve as the systems integrator for the facility to ensure that the networked components are interoperably compatible.

2.1 Physics Requirements

It is possible to make reasonably reliable simulations both of standard model interactions and of the production of new particles at the SSC. Various tools such as GEANT also exist to simulate the response of a detector to the simulated events. To use these tools, sufficient computing resources must be made available to the SSC collaborations. The requirements are summarized in Table 2.1.

Table 2.1. Summary of requirements for physics and detector simulation runs.

Job (Run) Type	CPU Requirement (MIPS-seconds/event)	Events/Run	Total Run Time (MIPS-seconds)	Event Length (kbytes)	Total Output /Run (Mbytes)
Test and Debug	50-100	10-20	1000-2000	300-500	5-10
Event Generation	5-10	10^5-10^6	10^6-10^7	10-30	1-10
Minimal Simulation	50-100	10^5-10^6	10^7-10^8	300-500	100-500
Full Simulation	10^3-10^4	10^4-10^5	10^8-10^9	300-500	10-50
Data Reduction and Analysis	5-10	10^5-10^6	10^6-10^7	300-500	100-500†

†Input data rate.

2.1.1 Event Generation. In a typical SSC interaction several hundred primary particles may be produced. Only a few of these particles may be of interest to the physicist, but all must be simulated in the detector, if possible. In order to study the response of the detector to the signal of interest, about 10^3-10^4 events must be generated. Similarly, background events must be studied since they can potentially produce signatures in the detectors that are misinterpreted as signal events. Typically, about 10^5-10^6 background events must be generated and studied for each physics signal. Each event generated by a physics Monte Carlo, such as ISAJET, takes about 5-10 sec. on a VAX 11/780 and generates about 10 KB-30KB of data for the physics simulation alone.

2.1.2 Detector Simulation. Several levels of detector simulation computations are envisioned. These will vary from simple compilation and debugging test runs to detailed runs which may require as much as 10^4 MIPS-seconds per event and produce on the order of an Mbyte of data.

- The short test runs are likely to require 10 minutes of CPU time in compilation and perhaps another 10 minutes of execution on a VAX 11/780 equivalent.
- A minimal detector simulation based on GEANT with a small number of volumes and parameterized showers may require 50-100 sec. on a VAX 11/780. Full samples of up to 10^6 events will be generated for detailed studies while some number of smaller samples of order 10^5 events will be needed to test ideas quickly. While the minimal simulation is not very detailed, it may still produce a record as long as a fully simulated event , or about 0.5-1 MB.
- For some purposes one must run detailed tracking and shower simulations using the full power of GEANT. A typical SSC event requires of order 10^4 sec. on a VAX 11/780 for full shower simulation with a low cutoff energy. Samples of order 10^4 events will be needed to answer many questions. The output of each event will again be about 0.5-1 MB in length.

2.1.3 Data Reduction and Analysis. While much of the data reduction and analysis of the events will be done during the generation of the simulation, additional analysis passes may be done on the generated data. This analysis may consist of applying a different set of cuts to the data, or applying a different reconstruction or pattern recognition algorithm. These jobs may run very quickly in some cases when only a few calculations are performed to produce a new set of histograms, for example. Nevertheless, this type of job is likely to require access to large simulation output files and will therefore place some stringent demands on the network I/O capability. A job of this type might require less than a second per event on a VAX 11/780 but could require the transfer of 0.5-1 MB of data per event.

2.2 Users' Requirements

Within the next 2-3 years it is expected that approximately 100 full time equivalent (FTE) scientists will be involved in the physics/detector simulation effort for the SSC. The work load may be distributed among 200-300 different people. The needs and the working environments of these users will vary considerably. While some of the physicists and software engineers involved with the simulation work will be located at the the SSCL, most of the users will be resident at institutions throughout the world. They will require high-speed communication with the computing facility at the SSCL. Some of the users will access the facility from terminals on their local computer while others will login directly from their local workstations. The users' activities will vary considerably. Some users may require only short interactive sessions, some will be involved in code development and debugging, while others will submit long batch jobs; some will require large amounts of bit-mapped data to be transferred, some will require a windowing environment, while others will only transfer small files of ASCII data or UNIX command lines.

2.2.1 External Users. Initially the SSC computer simulation facility will be used primarily by outside users who will log on remotely through a wide area network (WAN). Good access is essential if this is to be possible. Remote users will gain access to the facility via the ESNET WAN. The facility shall provide DECnet and TCP/IP interfaces over Ethernet to the WAN.

2.2.2 Local Users. Local users are those Laboratory employees and visitors who use the facility while in residence at the SSCL. The local users' needs will not differ significantly from the external users with just a few exceptions. The local users will gain access to the facility by a local area network (LAN) which is likely to permit them a much larger bandwidth for the transfer of data from the facility to the individual user's workstation or display terminal. Consequently these users will make larger demands on the data transfer and graphics capabilities of the facility. Fully interactive detector visualization will require bandwidths that are currently obtainable only through dedicated processors in a graphics workstation located at the user's desk.

2.2.3 User Model. The users are likely to engage in a variety of activities on the system and each activity will place a different and time-varying requirement on the system. A model of the users' activities and durations is summarized in Table 2.2. These activities will include:

- Interactive login, file editing, word processing, and use of the mail facility.
- Compilation and quick-turnaround debugging jobs.
- Physics event generation.
- Minimal detector simulation jobs with limited tracking or shower deposition.
- Detailed detector simulation with fully reconstructed tracking and/or shower deposition.
- Re-analysis of simulation output in a "play-back" data reduction and analysis mode to further analyze the physics or detector simulation.
- Backup of source files, input data files, and simulation output files.

The model of the users activities assumes that there is a base of users reaching a peak of about 250 during the next 2-3 years. The demand for time on the facility should grow to the final level fairly rapidly. The model summarized below assumes a steady-state demand for the facility from the full base of 250 users. Clearly, the number of users and their activities will vary considerably. It is assumed that only 100 users are logged in at any time. It is assumed that there are certain activities in which all users engage and other activities which are a given user's primary function. For example, while all users are likely to submit compilation and debugging jobs on a daily basis, only some small fraction of the users will submit lengthy full simulation jobs each day.

Table 2.2. Model of User Requirements.

Activity	Job Requests (jobs/day)	CPU Requirements (MIPS)	I/O Requirements (MB/sec/5000 MIPS)	Storage Requirements (GB/day)
Interactive	"Continuous"	10	0.1	0.1
Compile and Debug	400	42	6	8
Event Generation	8	370	2.8	80
Minimal Simulation	28	1210	6	560
Full Simulation	0.1	290	0.1	2
Data Reduction and Analysis	200	3700	28†	--
Backup	"Continuous"	10	10	700
TOTALS	>630	5630	53	1350

†Input from tape. The other entries are outputs.

2.3 Functional Model

Functionally the facility requirements can be broken into three major subsystems: 1) a networked front-end for interactive usage, 2) a file server, and 3) a ranch of parallel batch processing compute servers. A diagram of a model which has been developed to meet the functional requirements that were stated above is shown schematically in Fig. 2.1. Each of the distributed subsystems is networked by one or more high-speed network links to the other subsystems.

2.3.1 Front End Network. The front-end network shall provide the user the interactive computing that he needs to gain access to the facility, to retrieve and edit files, to compile and run small jobs, and to submit batch jobs. As shown schematically in figure 2.1, the front-end shall be comprised of a network of workstations. The front-end will be comprised of three types of workstations: some of these workstations will not have monitors, some fraction will be mid-range graphics workstations, and a small number will be high-end high-resolution graphics workstations. Each workstation, ideally one per user, shall provide a host unit for the users logged into the facility. The front-end workstation shall provide the system files for the user. The workstations shall permit usage of the system utilities described in paragraphs 3.2 and 3.3, shall permit usage of the batch system, and shall permit usage of disk and tape storage on the file server.

2.3.2 File Server. The file server, as shown schematically in figure 2.1, shall provide centralized data storage for the facility. The file server will provide storage of the users' source, object, input, and output files. Data produced on the front-end or the batch ranch will be

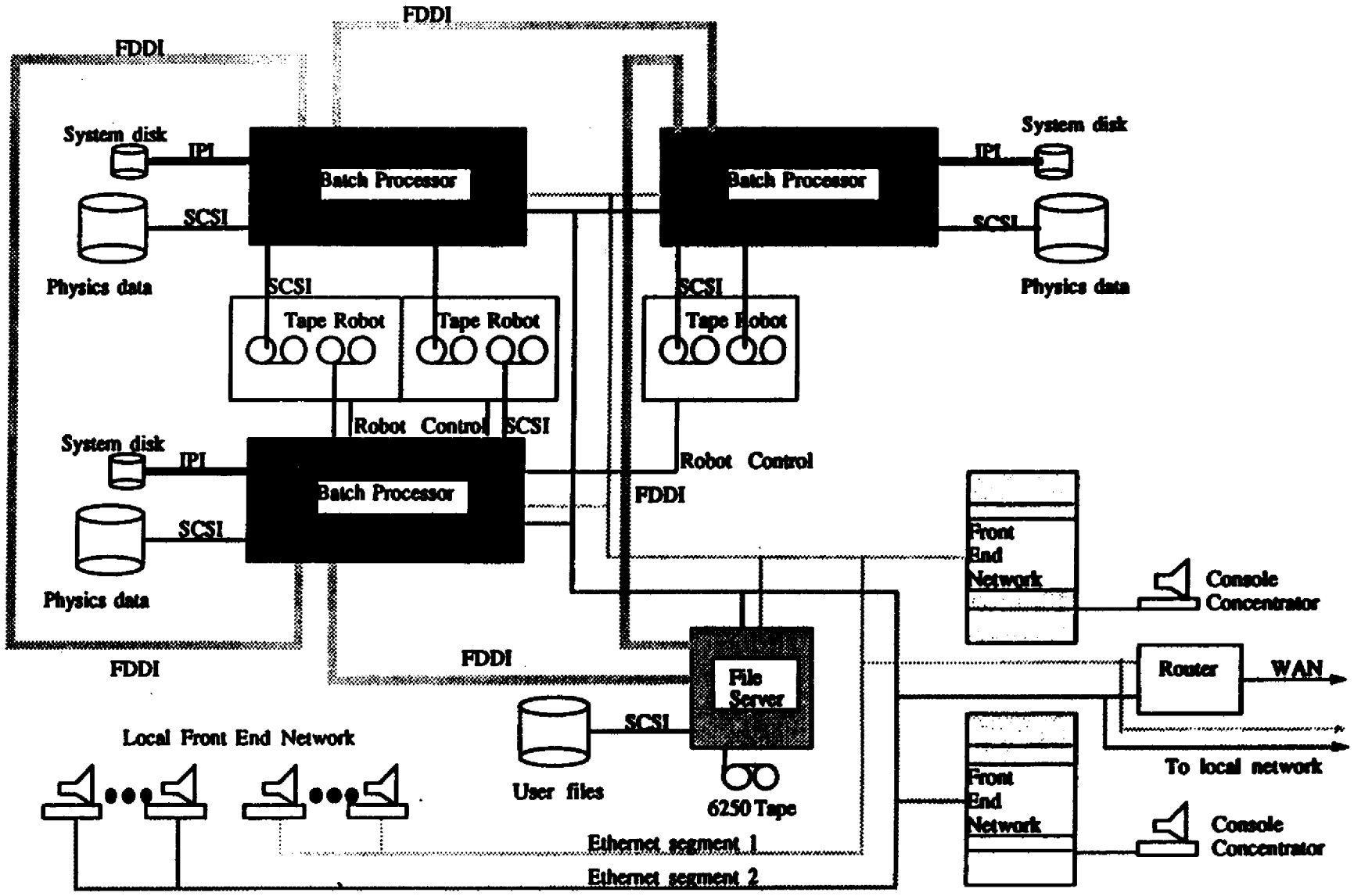

Figure 2.1. A possible model of the simulation facility.

transferred to the file server disks. Longer term archival of files shall be provided by file server tape drives and storage. Standard protocols shall be employed to pass data from the file server to the front-end or the batch ranch. Migration of files and their mounting should be transparent to the user.

2.3.3 Batch Processing Ranch. The major portion of the computing horsepower of the facility will reside in the batch ranch. This network of symmetric multi-processors will perform the large simulation jobs described previously in this section. The ranch is shown schematically in figure 2.1. The ranch shall be directly connected to high-speed disks and tape drives in order to achieve the I/O speeds required. File backups and archives of the ranch disks will be done by the file server. Job submission and output data will be transferred over the network directly from the front-end workstations to and from the batch ranch.

2.4 Operational Model

This paragraph provides a description of the operational concept of the facility. Interactive users will log on to the system either remotely (over T-1, etc. and through a router) or locally (via Ethernet). A process resident on a file server will assign an idle "front- end" workstation to that user. Ideally there will be one workstation for each user, thus providing him with a completely dedicated resource. Initially there will be approximately 30 front-end machines subnetted into two groups of fifteen and connected via a bridge. Most of the front-end units will not have monitors and will be rack-mounted. Each subgroup will have a separate interface to the file server. The system is intended to be scalable by adding additional file server/front end/Ethernet groups separated by bridges but accessing the same batch and archival services as the other front end groups.

It is intended that interactive and batch processing not be co-mingled. A separate batch "ranch" of compute servers will be accessible through Network Queueing System (NQS) software. Tools will be made available to assist in the porting of code developed on the front-end system to the batch ranch which may have a different architecture. A fast batch queue will be implemented to facilitate testing of code to be ported.

The eventual goal is that the front end/file server systems be able to access both disk and tape resources containing batch job output independently of the batch processors. Access to disk by dual/multi-ported drives and tape by multi-headed robot-based systems will accomplish this, and is therefore, reflected in the system design. However, for the first phase of development, 8-mm tape carousels will be used by the batch processors for tape storage. This is intended only as a temporary solution to the tertiary storage problem.

The theme of multi-vendor, networked, RISC-based open systems in this environment drives some systems integration requirements as well. In particular, the sharing of binary data by asynchronous processes across multi-vendor platforms argues for data compatibility. To this end all the systems shall support the IEEE floating point standard. In addition, it must interface with the rest of the hardware, network, and software systems in the same manner as a system with big Endian byte ordering.

2.5 Graphics

2.5.1 HEP Graphics Application. Graphics applications in high energy physics software include:

- Detector design and physics simulation in order to optimize detector performance.
- Detector modeling and interactive display of reconstructed events, digitization and pattern recognition.
- Monte Carlo and experiment analysis, event viewing and detector viewing, physics parameter representation, 2-D and 3-D statistical analysis, including histogramming and scatter plots, both black and white and color.
- Graphics displays for publications, with graphics editor for producing of figures for output onto high-quality hardcopy devices, black and white and in color.
- Graphics control systems with and without human interface.
- Graphics for software engineering applications, display of computer models, integration, etc.

2.5.2 Graphics Standards. Both GKS and GKS-3D applications will be used at the SSCL computing facility. Some CORE applications may also be required to run. PHIGS and PHIGS+ applications will be used in the near future.

Applications may need to capture images on graphics metafiles. The Computer Graphics Metafile standard (CGM) is being recognized by HEP applications and needs to be supported. CGM allows the transmission of pictures between different graphics standards. CGM may also be used in text processing systems to incorporate pictures within documents. Currently CGM supports 2-D graphics only. Future extensions to 3-D primitives, and picture segmentation may be required.

The standardization of workstation windowing systems is becoming recognized in HEP software. Networked graphics will be of increasing importance for SSCL HEP software applications. With X Window being adopted by the Open Software Foundation (OSF), graphics applications will require X Window environments in the near future. An application using the X Window system may reside and run on a client processor, such as a multi-processor computer engine. The user will interact with a local workstation acting as an X Window server or an X terminal. X Window support for graphics may be required to run with PEX graphics software and support both GKS and PHIGS+ via the X Window protocol.

The overhead imposed on LAN and WAN traffic by the X Window applications is an important concern for the integration efforts of the SSC Central Computing Facility environments.

2.5.3 Basic Graphics Library Functions. Higher-level graphics application tools, such as Physics Analysis Workstation (PAW) is heavily used in Monte Carlo and experiment analysis in HEP computing. PAW is based on the High level Interactive Graphics and Zebra (HIGZ) FORTRAN subroutine library which must be available on all local workstation platforms, as well as all host computers at the SSC Central Computing Facility. The performance of HIGZ is a crucial benchmark and acceptance test. HIGZ is primarily layered on top of GKS, but will also be required to run with PHIGS, PHIGS+, X11.3 or higher, and PEX. HIGZ includes dedicated HEP graphic macro-primitives, as well as features such as histogram production, helix drawings, jet interaction drawings, etc.

3. Detailed Requirements

This section describes in detail the requirements of the computing facility. The system has been divided by functionality into three sub-systems as has been described in Section 2 previously. In this section the pertinent hardware, operating system, software, graphics, network, support, and operational requirements are specified for the front-end network, the file server, and the batch processor ranch. The specifications are stated in the form of minimum requirements. Superior performance at suitable price/performance values is clearly desirable. The minimum required performance of the sub-system CPUs is stated in Section 4 in the form of industry standard benchmarks and physics benchmarks.

3.1 Hardware Requirements

Each of the major subsystems (front-end, file server, batch ranch) shall have a console switching device which will allow a single monitor to act as console for any machine within that subsystem. Every machine shall have at least one serial port to receive console messages. The operating system shall not require the console device to be available for output. Every machine shall have a mechanism to enable the OS to be loaded. There will also be a remote OS installation capability (over the network).

3.1.1 Front End Network. The strategy for front end processors centers around partitioned interactive utilization for tasks such as data analysis, test compilations and test runs. The goal is to provide one computer per interactive user. Several types of computers will be purchased.

- Type 0: These computers shall fit in a 19-inch rack or on a 19-inch shelf. It is desirable that they each be self-contained. A monitor, keyboard, and mouse will not be provided, however, these computers shall have the capability to use those facilities.
- Type 1: These computers shall meet the requirements of the mid-range graphics workstations specified in Section 3.4.1.
- Type 2: These computers shall meet the requirements of the high-end graphics workstations specified in Section 3.4.2.

3.1.1.1 CPU. The minimum CPU performance characteristics of the front-end machines are specified by the benchmark requirements of Section 4.

3.1.1.2 Memory. At least 16 MB of RAM is required in a configuration which is upgradable to 64 MB RAM.

3.1.1.3 Disk subsystem. Secondary storage shall be on a server. However, due to the large number of interactive users, network traffic issues dictate a "dataless" configuration, i.e., one with sufficient local disk for OS and swap space. This includes all common OS utilities and options. Minimum disk capacity shall be at least 150 formatted Mbytes.

3.1.1.4 Monitors. Monitors should be separable from CPU. The requirements for the mid-range and high-end monitors are provided in Sections 3.4.1 and 3.4.2 respectively.

3.1.1.5 Network interfaces. Both Ethernet (IEEE 802.3) and FDDI network interfaces shall be available for these platforms. The network specifications are provided in Section 3.5.

3.1.1.6 Console ports. The console ports for all front end network machines shall be RS-232. All system console messages and input requests including boot up sequences shall be directed to the port. The front end network system shall function as if a VT100 ASCII terminal using XON/XOFF flow control were connected to the port.

3.1.1.7 Console concentrator. A central workstation using an async multiplexer adapter with at least 32 ports shall be provided. This workstation will function as a console concentrator. A software program will monitor the status of each port and display the messages in subwindows using the X Window system. The system operator will interact with a particular network front end system by keying into and reading the display of the subwindow corresponding to that front end system. The front end system shall be capable of operating in the absence of a connection to either a VT100 or the console concentrator. The front end systems shall support a cable length of at least 25 feet between the front end system port and the console concentrator.

3.1.2 File Server. The file server is intended to be the centralized data storage facility for all user files within a user group. The file server shall run NFS; AFS (ANDREW File System) is desirable. A VME bus interface is required. Since a user may be assigned to any front end machine, NFS shall be used to ensure the same file structures are visible regardless of login.

3.1.2.1 CPU. The minimum CPU performance characteristics of the file server machines are specified by the benchmark requirements of Section 4.

3.1.2.2 Memory. A minimum of 32 Mbytes of memory are required. This shall be expandable to 128 Mbytes.

3.1.2.3 Disk subsystem. A minimum of 32 Gbytes of SCSI Winchester magnetic disk storage is required. The minimum disk size is 600 MB. In addition IPI drives shall be available for this system. The average access time shall be no more than 16 ms.

3.1.2.4 Tape subsystems. For common tertiary storage interface the server shall have 8 mm tape drive capability. In addition, it shall have 6250 bpi, dual density, 9 track tape, and 1/4-inch cartridge tape capability. The server will have 3480 capability. One such 8-mm tape drive and are such 9-track drive shall be included. One 1/4-inch tape drive and one 3480 drive are optional.

3.1.2.5 Network interfaces. Both Ethernet and FDDI shall be available since both file service to front end users and high speed data transfer from the batch ranch are necessary. A minimum of two Ethernet connections and one FDDI connection are required.

3.1.3 Batch Processing Ranch. Multiple, shared memory, symmetric multi-processor machines will be arrayed as compute servers to process the CPU intensive jobs with a network batch implementation. The compute servers shall be capable of providing network batch access to the front-end and file server sub-systems over Ethernet using NQS software. This software will be implemented by the SSCL. A minimum of 4 multi-processor CPUs per cabinet is required.

3.1.3.1 CPUs. The minimum performance characteristics of the batch ranch compute server CPUs are specified by the benchmark requirements of Section 4. Degradation of the throughput per processor, in the tightly-coupled, multi-tasked, multi-processor environment, shall be minimized. Consequently, the linearity of response of the throughput of the system as CPUs are added is an important consideration.

3.1.3.2 CPUs/interprocess communication. Fast interprocessor communication is desirable. It shall be possible to lock processes to individual CPUs so that all ranch processors can be ganged in parallel for loosely coupled parallel jobs. A VME interface is also required.

3.1.3.3 Shared memory. At least 16 Mbytes of RAM is required per CPU. The capability to expand this is desirable.

3.1.3.4 Network interfaces. Since the large amounts of simulation data produced by the various processors need to be collated into data sets and written to tape, FDDI is required between the compute server machines. In addition, each server shall have a minimum of two Ethernet interfaces.

3.1.3.5 Disk subsystems

- System disks. A minimum of 4 Mbyte/sec I/O to IPI disks is required to buffer the data, as well as to provide for fast swap and system software access. At least 1 Gbyte per multi-processor machine is required.
- Batch output buffer. At least 10 Gbytes SCSI disks are required to buffer simulation output to the tape subsystem. The minimum disk size is 600 MB.

3.1.3.6 Tape subsystem interfaces. Each multi-processor machine shall have at least 2 SCSI interfaces (on separate controllers) capable of connecting to an automated 8 mm tape subsystem as a Phase I, near-term tertiary storage mechanism.

3.1.4 Automatic Tape Handling System. At least one automatic 8mm tape handling system will be needed for each SMP unit in the batch processing ranch. Each system shall contain at least two drives with separate SCSI interfaces. Each drive interface shall be capable of being attached to different SCSI controllers within a SMP unit. Each drive shall have a tape capacity of 2GB and a transfer rate of 250kB per second. Each tape handling system shall have a minimum capacity of 100GB, more is desirable. It is desirable that the drives have a capacity of 4GB and a transfer rate of 500kB per second. The total capacity of all the units shall be at least 300GB. A total capacity of 750GB is desirable.

3.2 Operating System Requirements

3.2.1 General Requirements. This section describes the general operating system requirements of the front end network, the file server and the batch processing ranch platforms. Additional requirements for each category will be listed in the corresponding subsections.

3.2.1.1 O/S types. Each platform shall execute as its native operating system at least one of the following versions of the UNIX operating system:

Berkeley UNIX - BSD4.3 or a version derived from BSD4.3
AT&T System V - SYS V.3 or a version derived from SYS V.3, or SYS V.4

The name UNIX is used as a generic term for either of these operating systems in the remainder of this document.

The OS shall be SVID 3.2 compliant.

3.2.1.2 Required Extensions. Several extensions to UNIX are commonly made by vendors. They are usually based on merging the features of BSD4.3 and SYS V.3 as well as incorporating emerging standards such as POSIX 1003.1(or later). In the case of a conflict, the POSIX standard should be followed. POSIX compliance is desired.

- Berkeley Sockets. Berkeley style sockets shall be provided as the interface to the communication protocols. The internet domain shall be supported; support for the UNIX domain is desireable. Stream, datagram, and raw (for superuser) sockets shall be supported. Systems with the native transport layer interface (TLI) from SYSTEM V shall provide a socket library interface to the TLI.
- Asynchronous I/O. Asynchronous I/O shall be supported as defined here: Processes shall have the ability to initiate read or write operations and not have their execution blocked waiting for completion. A synchronization facility equivalent to BSD4.3 select (2) shall be provided.
- Shared Memory. A shared memory function shall be provided. A user process shall be able to create/attach to/delete a section of shared virtual memory. The system shall support several independent memory contexts simultaneously.

3.2.1.3 Reconfiguration. The UNIX system shall be capable of being reconfigured, that is, the various parameters that affect performance, buffers, memory utilization and devices shall be changeable either on the fly or by a combination of recompiling and/or relinking the kernel. It is desirable that the kernel support "self optimization" via a feedback mechanism for adjusting system parameters.

3.2.1.4 Device Drivers. The UNIX system shall support either BSD 4.3 or SYS V.3 style device drivers. A sample character device driver and block device driver shall be provided. A sample networking device driver shall also be provided.

3.2.1.5 Source Code. Source code for the kernel and operating system utilities shall be available. The code will be used to obtain an understanding of system performance/functionality. This may require that an AT&T System V source license be obtained by SSCL.

3.2.1.6 Process Priority. The scheduling priority of a process shall be settable both at the start of execution and while it is executing. Only the superuser shall be able to increase the priority of a process.

3.2.1.7 System Monitoring

- Network. Network statistics for each network interface will be maintained. The list of statistics will include Address Resolution Protocol (ARP) mappings, routers, network message buffer utilization, number of input packets, number of output packets, input/output errors, protocol connections. The values will be available while the system is running.
- CPU. CPU utilization and process accounting statistics will be maintained. The values will be available while the system is running.
- Memory. Memory utilization statistics will be maintained. The values will be available while the system is running.

3.2.1.8 Internet Domain Name Service. The Internet Domain service is required on all systems. Each system shall provide the resolve(3) functions as well as the named(8) server.

3.2.1.9 Remote Procedure Call. The remote procedure call mechanism as described by SUN Microsystems Inc. will be supported on all platform types.

3.2.1.10 Network File System. The Network File System as described by SUN Microsystems Inc. shall be used as one mechanism to interconnect the platforms. The ANDREW File System is desirable.

3.2.1.11 Yellow Pages. The yellow pages facility as described by SUN Microsystems Inc. shall be utilized on all platforms to ensure a single user domain.

3.2.1.12 Signals. The vendor shall provide a list of signals. Standard UNIX signals shall be supported.

3.2.1.13 Disk Quota System. It is highly desirable that a disk quota system be provided.

3.2.1.14 REXEC. It is mandatory that rexec shall be supported.

3.2.1.15 Console Messages. It shall be possible to direct all console messages to a serial port.

3.2.1.16 System Loading Capability. The OS software shall support system loading. It is desirable that this can be done remotely, over the network.

3.2.1.17 IEEE Floating Point Standard. All systems shall support the IEEE floating point standard and interface with the rest of the hardware, network, and software systems with Big Endian byte ordering.

3.2.2 Front End Network

3.2.2.1 File Systems. Either the standard BSD 4.3 or SYS V.3 or SYS V.4 file system shall be used. Enhanced file systems will be allowed if the file system structure is documented and provided to SSCL. Long file names (31 characters) and symbolic links shall be supported.

3.2.2.2 Operating System Size. The operating system, common system utilities including compilers and linkers, swap space and temporary file directories shall reside within 150 formatted megabytes. The capability of swapping to an additional disk drive is not required but is desirable.

3.2.2.3. User License. A minimum four-user license is required.

3.2.3 File Server

3.2.3.1 File Systems. Either the standard BSD 4.3 or SYS V.3 or SYS V.4 file system may be used. Enhanced file systems will be allowed if the file system structure is documented and provided to SSCL. Long file names (31 characters or more) and symbolic links shall be supported.

- Disk Striping. Disk striping is used to spread a file system across several disk partitions. The striping of data occurs at the record level. The disk partitions shall be capable of being installed on separate physical disks as well as disk drives of different types. The ability to stripe is desirable.
- Spanning Disks. File systems shall be capable of spanning multiple disk partitions. The disk partitions shall be capable of being installed on separate physical disks as well as disk drives of different types.
- System Swap/Page Space. The system shall be capable of splitting the system swap and paging space across several disk partitions. The disk partitions shall be capable of being installed on separate physical disks as well as disk drives of different types.

3.2.3.2 User License. A minimum 64-user license is required.

3.2.4 Batch Processing Ranch

3.2.4.1 Symmetric MultiProcessing. The batch processing ranch will function in a tightly coupled environment with shared memory. The operating system shall utilize symmetric multiprocessing. Each processor in the hardware has all of the capabilities of all of the other processors. There is no master or slave. This requirement extends to device I/O as well as process scheduling.

3.2.4.2 Process Locking. The system shall have the capability to lock a process onto a particular processor. This shall be done as a system call by either the process itself or from an external process. Super user privilege is required for this function.

3.2.4.3 File Systems. Either the standard BSD 4.3 or SYS V.3 or SYS V.4 file system may be used. Enhanced file systems will be allowed if the file system structure is documented and provided to SSCL. Long file names (31 characters or more) and symbolic links shall be supported.

- Disk Striping. Disk striping is used to spread a file system across several disk partitions. The striping of data occurs at the record level. The disk partitions shall be capable of being installed on separate physical disks as well as disk drives of different types. The ability to stripe is desirable.
- Spanning Disks. File systems shall be capable of spanning multiple disk partitions. The disk partitions shall be capable of being installed on separate physical disks as well as disk drives of different types.
- System Swap/Page Space. The system shall be capable of splitting the system swap and paging space across several disk partitions. The disk partitions shall be capable of being installed on separate physical disks as well as disk drives of different types.

3.2.4.4 User License. A minimum 64-user license is required.

3.2.4.5 Cooperative Processing Software. The Cooperative Processing Software (CPS) from Fermilab will be ported by the SSCL to the new architecture for coarse-grained parallelization. The SSCL will use the message-passing model to port it to the shared-memory batch ranch.

3.3 Software Requirements

3.3.1 Compilers. All compilers shall support variable names of at least 31 characters. The following compilers shall be provided:

- C (ANSI C compiler is desirable) On systems with multiple processors it is desirable that the C compiler be capable of parallelizing code across each of the processors.

- C++ (equivalent to AT&T version 2).
- FORTRAN 77. Newer versions of FORTRAN such as 8/9X are desirable. VAX FORTRAN extensions are desirable. Newer versions of FORTRAN such as 8/9X are desirable. The FORTRAN compiler shall support variable names including "$" and underscore "_", the character set A–Z, a–z, !, ", %, &, <, >, $, and _. It shall also support Hollerith constants, case folding except in character strings and Hollerith, octal, hex, and binary constants, I/O formats for hex, types such as REAL*4, INTEGER *2, LOGICAL*1, etc., the IMPLICIT NONE capability, and the DO WHILE/END DO capability. It is desirable that the FORTRAN compiler also support structures, the ability to "include" files and FORTRAN header files, and perform UNIX system file I/O calls. It is desirable that the FORTRAN compiler be capable of parallelizing code across each of the processors on the multiple-processor systems.
- PASCAL is desirable.

Modules developed in one language shall be callable from any of the others. Each compiler shall be able to include information necessary for the debugger. Each compiler shall be capable of doing several levels and types of optimization.

3.3.2 Linkers. The linker shall be capable of linking code generated from any of the compilers. It is desirable that the linker be capable of using and creating shared libraries for dynamic linking. The linker shall recognize external names which are significant in all positions.

3.3.3 Debuggers. The debugger shall work with all languages and support modules consisting of combinations of languages. The debugger shall work in an X Windowing environment with a graphical user interface. That is, the source code shall be displayed in a window with current execution statement and breakpoint information indicated. Commands to the debugger and status from the debugger shall be displayed in a separate window. The debugger shall be BSD 4.3 DBX. An assembly language debugger shall also be provided. The ability of the debugger to handle multiple processes is desirable.

3.3.4 Network Utilities. The Berkeley UNIX "r" (rlogin, rsh, etc.) commands shall be supported. Network utilities such as netstat(1), ping(1M), and arp(1M) are required. Telnet and FTP shall be supported. On systems with more than one network interface, these utilities shall be supported transparently. The Berkeley protocol services normally maintained in /etc/services shall be supported along with inetd(8).

3.3.5 Backup/Archive. Both tar(1) and cpio(1) shall be provided. It is desirable that dump(8), rdump(8), restore(8) and rrestore(8) be supported. It is desirable to support an automatic file migration and archival mechanism. This utility, if provided, shall be compatible with all file server conventions (Section 3.2.3).

3.3.6 Shell. The C Shell (csh) and Bourne shell (sh) shall be provided. The C shell shall contain Berkeley style job control as well as file completion. It is desirable to also include the Korn shell (ksh).

3.3.7 Tape Management. A tape management software package is desired. The ability to allocate/deallocate and mount/dismount tape drives by volume name is desirable. Support of ANSI labelled tapes is desirable.

3.3.8 X Window System. The X Window system servers (for display full systems) and client utilities for version X11R3 shall be supported. X11R4 shall be made available as soon as possible. The standard window managers (uwm, twm, awm, etc.) shall run on the system.

3.3.9 Graphical User Interface. A standard GUI is desirable. A vendor supported port of OSF/Motif is desirable.

3.4 Graphics Requirements

The following type graphics adapters are required on the front-end system. The specified graphics software requirements (3.4.3) apply to all systems. Approximate definitions:

- Vectors: 10-pixel, 20 segment diagonal polylines
- Circles: 8-pixel diameter, unfilled circles
- Triangles: 100-pixel, filled triangles
- Characters: 5x9-pixel font, 80 characters per line
- Main BLTs: 800x700-pixel main memory to display memory 8-plane BLTs
- Display BLTs: 800x700-pixel display memory to display memory 8-plane BLTs

3.4.1 Entry-Function or Mid-Range Graphics Adaptor. The following specifications are minimum required values for an entry-function or mid-range (type 1) graphics adaptor.

3.4.1.1 Graphics Capabilities

- Primitives. Vectors, polylines, circles, arcs, polygons (256-sided), concave, convex, crossing, doughnut, wireframe, non-uniform rational B-Splines with trimming for curved lines, meshes, surfaces.
- Image Rendering. Depth cuing, flat shading, smooth (Gouraud) shading, ambient and specular (Phong) lighting, anti-aliased lines, 8 sources with adjustable intensity, color and position.

- Dimensional Capabilities. Geometric transformations (scale, rotate, translate, perspective), 32-bit IEEE floating point, 2D and 3D coordinates, 6-axis (6-plane) clipping for control of the rendered page.
- Performance Optimization. Double buffering.

3.4.1.2 User Interface.

- Color Monitor. High-resolution, 19-inch color monitor. Monitors should be separable from the CPU. A programmable cursor and cross-hair are desired.
- Input Devices. Keyboard, mouse.
- Output Devices. Audio output and RGB for video signals to the color display are desired.

3.4.1.3 Graphics Performance

- Display Controller. A 2048x1024 frame buffer size, 8 bit color, 8 frame buffer planes, 2 or 4 overlay planes, 16.7 million color palette, and IEEE 32-bit floating point mathematical representation are required.
- Color Monitor. A 19-inch (480 mm) diagonal screen, 343x274 mm raster size, 60 Hz non-interlaced refresh rate, 1152x900 or 1280x1024 display resolution, and 10x15 characters in a 10x21 cell are required.
- System Performance. 80,000 (3D) vectors (polylines) per second, 90,000 (2D) vectors (polylines) per second, and 30,000 polygons per second without light source are required.

3.4.2 High-End Graphics Adaptor. The following specifications are typical, desired values for a high-end graphics adaptor (type 2).

3.4.2.1 Graphics Capabilities

- Primitives. Vectors, polylines, circles, arcs, polygons (256-sided), concave, convex, crossing, doughnut, wireframe, non-uniform rational B-Splines with trimming for curved lines, meshes, and surfaces are desired.
- Image Rendering. Depth cuing, 24-bit Z-buffer for hidden-surface removal, flat shading, smooth (Gouraud) shading, ambient and specular (Phong) lighting, anti-aliased lines, 8 sources with adjustable intensity, and color and position are desired.
- Dimensional Capabilities. Geometric transformations (scale, rotate, translate, perspective), 32-bit IEEE floating point, 2D and 3D coordinates, and 6-axis (6-plane) clipping for control of the rendered page are desired.
- Performance Optimization. Double buffering and Z-buffer hidden-surface removal are desired.

3.4.2.2 User Interface.

- Color Monitor. A 19-inch high-resolution color monitor with 1280x1024 resolution, 60-Hz non-interlaced refresh rate, and programmable cursor and cross-hair are desired.
- Input Devices. A keyboard and mouse are required.
- Output Devices. Audio output and RGB for video signals to the color display are desired.

3.4.2.3 Graphics Performance.

- Display Controller. A 2048x1024 frame buffer size, 40 frame buffer planes, 4 overlay planes, 16.7 million color palette, IEEE 32-bit floating point mathematical representation, 16-bit Z-buffer, and 4 plane double buffering are desired.
- Color Monitor. A 19-inch (480 mm) diagonal screen, 343x274 mm raster size, 60 Hz non-interlaced refresh rate, 1280x1024 display resolution, and 10x15 characters in a 10x21 cell are desired.
- System Performance. 900,000 (3D) vectors (polylines) per second, 950,000 (2D) vectors (polylines) per second, and 50,000 3D) polygons/sec with light source and shading are desired.
- Peak Performance. 250,000 (3D) coordinates (display list) per second, 300,000 (2D) coordinates (display list) per second, graphics accelerator with 900,000 (3D) coordinates per second and 2 million (2D) coordinates per second, 60 million pixels per second scan conversion, 20 million pixels per second window move speed, and 125 million pixels per second area fill speed are desired.

3.4.3 Graphics software. The following requirements apply to all graphics systems unless otherwise specified.

3.4.3.1 Graphics Kernel System (GKS). An ANSI standard compliant implementation of GKS level 2c must run on all workstations and CPU-servers (i.e., front end and batch ranch processors). GKS-3D is desirable on the low-end (Type 0) graphics workstations and required on the high-end (Types 1 and 2) workstations.

3.4.3.2 Programmer's Hierarchical Interactive Graphics System (PHIGS). An ANSI standard compliant implementation of PHIGS must run on all workstations and CPU-servers.

3.4.3.3 PHIGS+ and PEX. Availability of PHIGS+ and PEX is desired on all workstations and CPU-servers.

3.4.3.4 The X Window System (X). An implementation of the MIT X Version 11 R3 must run on all workstations, including the file server.

3.4.3.5 Computer Graphics Metafile (CGM). An ANSI standard compliant implementation of CGM is desirable on all workstations and CPU-servers.

3.4.3.6 User Application Graphics Software. The High Level Graphics system and Zebra (HIGZ) and the PAW application graphics systems developed by CERN computing divisionmust run on all workstations and CPU-servers. These requirements will be evaluated as described in Section 4.2. The interactive features of these graphics libraries must run on all front end workstations. Support for graphics input via keyboard and mouse is required. Support for cross hair operation is desired.

3.5 Network Requirements

The network requirements vary for each element of the system (i.e. front-end systems, file server and batch processing ranch) but include those defined as "common". Any networking related hardware or software which is to be supplied by a third party will be the responsibility of the vendor. Support and installation for third party products may be supplied by the third party, but the vendor will maintain responsibility for the performance, installation, and maintenance of these products.

3.5.1 Common Hardware Network Requirements. The common hardware interface requirements for all elements are detailed as follows:

1. Ethernet (IEEE 802.3)
2. FDDI (ANSI X3T9.5).

An FDDI interface will not be installed on the front-end workstations. It must be possible to install an FDDI interface in the future. The system(s) shall be able to support and effectively utilize multiple Ethernet interfaces for the TCP/IP protocol suite. The system(s) shall also support multiple protocols simultaneously through all Ethernet interfaces.

3.5.2 Common Protocol Requirements. The following network protocols are minimally required to be supplied on all elements of the system and function through Ethernet (IEEE 802.3).

1. TCP/IP
2. NFS/SMTP/FTP/Telnet
3. X Windows

It is also required that the vendors provide a statement of intent for support of OSI protocols which includes a schedule of anticipated implementation at various levels of support.

3.5.3 Front-end Network Requirements. In addition to the "common" requirements, the front-end system(s) shall be supplied with DECnet (phase IV end-node). DEC LAT protocol via Ethernet (IEEE 802.3) is desirable.

3.5.4 File Server Network Requirements. In addition to the "common" requirements, the file server system(s) shall be supplied with the following:

1. TCP/IP (Functioning via FDDI)
2. DECnet (phase IV end-node) via Ethernet (IEEE 802.3)

DEC LAT protocol is desirable.

The file server system(s) must also support and effectively utilize up to four Ethernet interfaces and sub-netting for the TCP/IP protocol suite.

A minimum of two FDDI interfaces must also be be supported by the vendor's system. This support shall allow for the effective utilization of the second interface.

3.5.5 Batch Processing "Ranch" Network Requirements. In addition to the "common" requirements, the ranch system(s) shall be supplied with TCP/IP (functioning via FDDI and Ethernet IEEE 802.3).

A minimum of two FDDI interfaces must also be be supported by the vendor's system. This support shall allow for the effective utilization of the second interface.

The system must have a high speed communications path between processors in the "ranch". Within one machine, this path must be provided by an internal system buss. Between machines, this path may be provided either by an internal system buss or FDDI.

3.6 Support Requirements

During the initial receipt, installation and testing of the system, on-site technical support shall be provided at the SSCL. This support shall include detailed documentation of all hardware and software components, maintenance on same, and training to familiarize employees with the system. Dependent upon options being exercised, the following items become additional system requirements.

3.6.1 Maintenance. Maintenance for all system hardware items shall be provided. Standard hardware maintenance plans offered by the supplier may be quoted; but as a minimum shall include on-call support provided by the supplier from his support facility. Full time on-site support is desirable for the file server and batch ranch. Desirable is a 4-hour response time (from time of trouble call until arrival of service engineer), a local supply of critical hardware components, and an accountable tracking system for hardware failures.

The software offeror shall provide maintenance support for all software provided. Software maintenance support shall include all software updates (major and minor) as they become available. These updates shall include executable code delivered on appropriate magnetic media, and supporting documentation. In addition, technical support via telephone on-site, on an as required basis must be provided.

3.6.2 Training. Training options include providing formal classroom training of all commercial-off-the-shelf training courses on a timely and routine schedule for all available courses. Other options may include the arrangement of special sessions to satisfy the needs of the SSCL project and the availability of self-directed/self-paced training material arranged to have the same impact as the classroom presented materials.

3.6.3 Documentation. All existing documentation applicable to the operation and maintenance of the proposed system shall be provided along with any current and future updates. This is to include, but is not limited to, copies of all system and user-level documentation in hardcopy form with right to copy, plus on-line man (1-8) pages. A full document set in electronic form is

desirable. Advice regarding such documentation shall be provided as part of the technical support option.

3.7 Operational Requirements

This section covers the operational requirements of the hardware described in this document. These requirements are summarized in Figure 3.7.

3.7.1 Size of footprint. The console for each subsystem will have a footprint not exceeding 16 square feet.

3.7.1.1 Batch ranch processors. The maximum footprint for the Batch ranch processors and their disk drives shall not exceed 50 square feet fitting inside a four-foot width. This footprint does not include surrounding space needed for maintenance procedures.

3.7.1.2 File server. The maximum footprint for the file server shall not exceed 32 square feet fitting inside a four-foot width. This footprint does not include surrounding space needed for maintenance procedures.

3.7.1.3 Front End Network.

- The maximum footprint for the networked front end (the Type 0 workstation) is based on the premise that the CPUs shall be rack-mounted in 6 foot cabinets with a minimum of 8 processors per cabinet. It shall not exceed 25 square feet fitting inside a four-foot width. This footprint does not include surrounding space needed for maintenance procedures.
- The maximum footprint for each office model workstation (Type 1 workstation) shall be such that it will fit on a desk or beside a desk with the console on the desk.

3.7.1.4 Automatic tape handling system. The automatic 8-mm tape-handling system shall have a footprint not exceeding 10 square feet altogether.

3.7.2 Power. Acceptable VAC requirements include 120, 208 and 240 (no 277 or 480) volts with 1 & 3 phase current at 60 Hz.

3.7.2.1 Batch ranch processors. Maximum power utilization for the batch ranch processors will not exceed 2500 watts per cabinet.

3.7.2.2 File Server. Maximum power utilization for the file server processor will not exceed 2500 watts per cabinet.

3.7.2.3 Front End Network.

- Maximum power utilization for the networked front end (Type 0 machines) will not exceed 600 watts per processor.

- Maximum power utilization for the Type 1 workstation will not exceed 800 watts per workstation (CPU, monitor, and disk).

Operational Requirements for the Physics and Detector Simulation Facility

The footprint numbers only include space for hardware. The maintenance requirements will be considered by the implementers. The vendors are responsible for putting the appropriate equipment into the designated area.

	Footprint (desired)	Power (desired)	A/C (required max.)
Ranch Processors	50 sq. ft. ≤4' width	2500 watts/cabinet	70000 BTUs
Cable length	25'		
8mm tapes	≤4' width	2500/cabinet	
File Server	32 sq. ft. ≤4' width	2500 watts/cabinet	30000 BTUs
Cable length	25'		
Front End Network	25 sq. ft. ≤4' width	600 watts/processor	2000 BTUs/processor
Cable length	25'		
Office Workstation CPU Display		800 watts/workstation	2500 BTUs/workstation

Operational Model – Example Layout for Computer Room

This model is not intended as a scaled drawing.

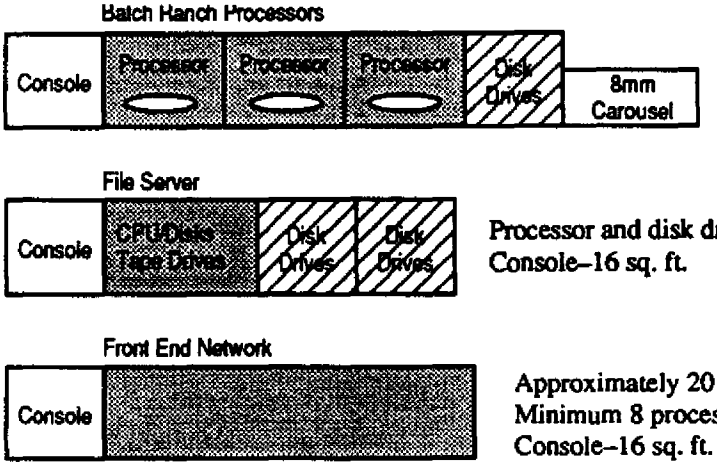

Processors and disks–50 sq. ft.
8 mm tape carousel–10 sq. ft.
Console–16 sq. ft.

Processor and disk drives–32 sq. ft.
Console–16 sq. ft.

Approximately 20 rack-mounted processors–25 sq. ft.
Minimum 8 processors with SCSI disks per 6' cabinet
Console–16 sq. ft.

Note: Console space is based on one console per functional unit.

Figure 3.7. Operational requirements for the simulation facility.

3.7.3 Air conditioning requirements

3.7.3.1 Batch ranch processors. The total heat load of the batch ranch processors shall not exceed 70000 Btus per hour.

3.7.3.2 File server. The heat load of the file server system(s) shall not exceed 30000 Btus per hour.

3.7.3.3 Networked front end

- The heat load of the networked front end processors shall not exceed 2000 Btus per hour per processor.
- The heat load of the office model workstations shall not exceed a total of 2500 Btus per hour per workstation.

3.7.4 Current

3.7.4.1 Batch ranch processors. Maximum current for the batch ranch processors shall be 60 amps per cabinet.

3.7.4.2 File server. Maximum current for the file server shall be 60 amps.

3.7.4.3 Networked front end. Maximum current for the network front end machines shall be:

- Type 0 - 10 amps per processor
- Type 1 - 15 amps per workstation
- Type 2 - 15 amps per workstation

4. Qualification Requirements

4.1 Benchmarks

The results of the benchmark tests will form the major criteria in selecting qualifying equipment. The SPECmark suite and, in the case of multi-processors, the SPECthruput suite will be run. The individual benchmark scores within the SPEC suite will be evaluated separately with a preference being given to the scientific codes. However, the Physics benchmark tests will provide the single most important criteria.

The vendor may supply the SSCL with a blank tape for the source code for the Physics benchmarks.

4.1.1 Spec.

4.1.1.1 SPEC Benchmark Suite. The Systems Performance Evaluation Cooperative (SPEC) benchmark suite will be run on all platform types. The suite consists of the SPEC Benchmark Release 1.0 benchmarks. The benchmarks are described in the SPEC Newsletter available from SPEC. The results from each benchmark will be compared for each system within a given platform type.

4.1.1.2 Front End Network. The minimum acceptable SPECmark for a front end network CPU is 10.

4.1.1.3 File Server. The minimum acceptable SPECthruput for a file server system is 50.

4.1.1.4 Batch Processing Ranch. The SPECmark for the individual processors used in the batch ranch compute servers shall be quoted. The SPECmark for such a processor running in uniprocessor mode must be at least 10. The SPECthruput rating for a batch processor ranch compute server shall be quoted per CPU. Data that describe the linearity of the SPECthruput value vs. the number of CPUs shall be provided. The linearity of response of the throughput of the system as CPUs are added shall be an important consideration.

4.1.2 Disks. The sio benchmark suite will be run on all platform types. The suite consists of four disk tests: sequential reading, random reading, copying, and a mix of the previous three tests. The suite will be run on a single disk drive and also across a pair of disk drives. The number of megabytes for each test is varied.

4.1.2.1 Front End Network. The sio rating for each type of front end network system shall be quoted.

4.1.2.2 File Server. The sio rating for the file server system shall be quoted. All times must be from the sio benchmark with eight processes and dual disks.

4.1.2.3 Batch Processing Ranch. The sio rating for the batch processor ranch shall be quoted. All times must be from the sio benchmark with eight processes and dual disks.

4.1.3 Network. The Ethernet network performance of each platform will determined using the discard benchmark program. It tests both TCP and UDP performance using a variety of packet sizes. The FDDI performance of the file server and batch processing ranch platforms will also be determined using this benchmark.

4.1.3.1 Front End Network. The network discard packet rating for each type of front end network system over Ethernet must be quoted.

4.1.3.2 File Server. The discard packet rating for a file server system over Ethernet must be quoted. The discard packet rating for a file server system over FDDI must be quoted.

4.1.3.3 Batch Processing Ranch. The discard packet rating for a batch processing ranch system over Ethernet must be quoted. The discard packet rating for a batch processing ranch system over FDDI must be quoted.

4.1.4 NFS. The Ethernet network file system (NFS) performance of each platform will determined using the nhfsstone benchmark program. It is run on an NFS client and generates an artificial load using a particular mix of NFS operations. The NFS over FDDI performance of the file server and batch processing ranch platforms will also be determined using this benchmark.

4.1.4.1 Front End Network. The nhfsstone rating for a front end network system over Ethernet must be quoted.

4.1.4.2 File Server. The nhfsstone rating for a file server system over Ethernet must be quoted. The nhfsstone rating for a file server system over FDDI must be quoted.

4.1.4.3 Batch Processing Ranch. The nhfsstone rating for a batch processing ranch system over Ethernet must be quoted. The nhfsstone rating for a batch processing ranch system over FDDI must be quoted.

4.1.5 Physics Codes. A physics FORTRAN benchmark suite based on the GEANT3, MINUIT, PYTHIA, KERNlib, and ISAJET will be supplied. A suite will be provided to compare single- and double-precision speeds. These must be run with two levels of optimization: 1) minimum optimization (un-optimized), and 2) maximum optimization. The results from both runs must be reported, and the vendor must supply the output from the runs. Accuracy of the results is required. Any necessary vendor modifications to the code to effect this running must be reported to the SSCL. The physics codes will be broken into two parts: the initial suite and the final suite. All vendors must run the initial suite. Only those vendors judged to be in the competitive range will need to run the final suite.

4.2 Graphics Performance Demonstrations.

A series of graphics application test program using HIGZ and PAW (Physics Analysis Workstation system) must be demonstrated on all graphics workstation (front-end) platforms. Test data and directions will be provided. Graphics performance and quality, both black and white and color, will be monitored. Type (0) workstations will be tested across a network.

REFERENCES

1. Report of the Task Force on Computing for the Superconducting Super Collider, SSC-N-579, M. Gilchriese, editor, Dec., 1988.

2. Report of the SSC Computer Planning Committee, SSC-N-691, L. Price, editor, Jan., 1990.

3. Physics and Detector Simulation Requirements, SSCL-259, L. Cormell, editor, Mar., 1990.

TRADEMARKS

References to the following list of products has been made throughout this document. It is recognized that the products are proprietary and that the product names are registered trademarks

1. DEC is a trademark of Digital Equipment Corporation.
2. Ethernet is the registered trademark of the Xerox Corporation.
3. OSF and OSF/Motif are trademarks of the Open Software Foundation. OSF/1 is a trademark of the Open Software Foundation.
4. POSIX is a trademark of the Institute of Electrical and Electronic Engineers (IEEE).
5. SPECmark and SPECthruput are registered trademarks of the Systems Performance Evaluation Cooperative.
6. SUN is a trademark of Sun Microsystems.
7. UNIX is a registered trademark of the American Telephone and Telegraph Corporation. UNIX is used as a short form for UNIX Operating System.
8. VAX, VMS, and DECNET are registered trademarks of the Digital Equipment Corporation.
9. Winchester is a trademark of the International Business Machines Corporation.
10. X Window System is a registered trademark of the Massachusetts Institute of Technology.

Attachment B. Hardware Features Worksheet

Specification Reference	Item Description	Power Requirements I (amps)	V (volts)	AC (BTUs/hr)	Footprint Per Unit	Footprint System	Features A	O	P	R	N	Comments
3.1.1	**Front-end: Type (0) Workstation**		110 ac									
3.1.1.1	CPU		(60 Hz)									
3.1.1.2	Memory (16 MB)											
	Additional memory (desirable)											
3.1.1.2	Memory upgrade to 64 MB											
3.1.1.3	Disk (150 MB min)											
	Additional disk (desirable)											
3.1.1.5, 3.5.1	Ethernet interface											
3.1.1.5, 3.5.1	FDDI interface capability											
3.1	O/S Loading mechanism											
3.1	O/S Remote loading capability (desirable)											
3.1, 3.1.1.6	Console port (RS232)											
3.1.1	Fit in 19" rack or shelf											
	Self-contained (desirable)											
3.1.1.7	Front-end: Console multiplexer/concentrator											
	Software monitor (desirable)											
3.1.1	**Front-end: Type (1) Workstation, keyboard, mouse**		110 ac									
3.1.1.1	CPU		(60 Hz)									
3.1.1.2	Memory (16 MB)											
	Additional memory (desirable)											
3.1.1.2	Memory upgrade to 64 MB											
3.1.1.3	Disk (150 MB min)											
	Additional disk (desirable)											
3.1.1.4, 3.4.1.1, 3.4.1.2, 3.4.1.3	Color Monitor											
3.1, 3.1.1.6	Console port (RS232)											
3.5.1	Ethernet interface											
3.5.1	FDDI interface capability											

Attachment B. Hardware Features Worksheet

Specification Reference	Item Description	Power Requirements			Footprint Per Unit	Footprint System	Features					Comments
		I (amps)	V (volts)	AC (BTUs/hr)			A	O	P	R	N	
3.1.1	**Front-end: Type (2) Workstation, keyboard, mouse**		110 ac									
3.1.1.1	CPU		(60 Hz)									
3.1.1.2	Memory (16 MB)											
	Additional memory (desirable)											
3.1.1.2	Memory upgrade to 64 MB											
3.1.1.3	Disk (150 MB min)											
	Additional disk (desirable)											
3.4.2.1, 3.4.2.3	Color Monitor											
3.1, 3.1.1.6	Console port (RS232)											
3.5.1	Ethernet interface											
3.5.1	FDDI interface capability											
3.1.2	**File Server: CPUs (min. of 50 SPECthruput in total)**		(60 Hz)									
3.1.2	VME bus interface											
	NFS											
	AFS (desirable)											
	VME bus											
3.1.2.1	CPUs (min. of 50 SPECthruput in total)											
3.1.2.2	Memory (32 MB)											
	Additional memory (desirable)											
3.1.2.2	Memory upgrade to128 MB											
3.1.2.3	Disk subsystems											
	SCSI Disk Controllers, Disks											
	(32 GB total, min. of 600 MB disks)											
	Additional disk (desirable)											
	IPI Disk Controller											
	IPI Disk (1 GB, max avg access time 16 ms)											

Attachment B. Hardware Features Worksheet

Specification Reference	Item Description	Power Requirements I (amps)	V (volts)	AC (BTUs/hr)	Footprint Per Unit	Footprint System	Features A	O	P	R	N	Comments
3.1.2.4	Tape subsystems											
	9-track (6250 bpi) tape drive											
	8 mm tape drive											
	1/4 inch cartridge tape drive (desirable)											
	3480 tape drive (desirable)											
3.1.2.5, 3.5.1, 3.5.4	Ethernet interfaces (4)											
3.1.2.5, 3.5.1, 3.5.4	FDDI interfaces (2)											
3.1	Console port (not available for O/P)											
3.1	O/S loading mechanism											
3.1	O/S remote loading capability (desirable)											
3.1	Console switching device											
3.1.3	**Batch Ranch: SMP Machines (4 CPUs min. per SMP)**		(60 Hz)									
3.1.3.1	CPUs (min. of 50 SPECthruput in total)											
3.1.3.2	CPU communication, process locking											
3.1.3.2	VME bus interface											
3.1.3.3	Shared memory (16 MB minimum)											
	Additional memory (desirable)											
3.1.3.3	Memory upgrade capability (desirable)											
3.1.3.4, 3.5.1	Ethernet interfaces (2)											
3.1.3.4, 3.5.1, 3.5.5	FDDI interfaces (2)											
3.1	Console port (not available for O/P)											
3.1	O/S loading mechanism											
3.1	O/S remote loading capability (desirable)											
3.1	Console switching device											
3.1.3.5	Disk subsystems											
	SCSI Disk Controllers, Disks											
	(10 GB total, min. of 600 MB disks)											
	Additional disk (desirable)											
	IPI Disk Controller (4 MB/sec)											
	IPI Disk (1 GB)											
3.1.3.6	8 mm tape interfaces (SCSI) (2 per SMP)											
3.1.4	Automatic tape handling system		(60 Hz)									
	8 mm (2 GB, 250 kB/s transfer tape) Multi-drive, Multi-port, Automatic tape-handling system											
	Min. capacity/unit of 100 GB; min total cap. of 300 GB											
	Extra capacity per unit (desirable)											
	Extra total capacity (at least 750 GB desirable)											
	4 GB tapes (desirable)											
	500 kB/s transfer rate (desirable)											

Attachment C. Software Features Worksheet

Specification Reference	Item Description	Features					Comments
		A	O	P	R	N	
3.2.1.1	**Front-end: Type (0) Workstation, UNIX O/S (SVID 3.2)**						
	POSIX compliance (desirable)						
3.2.1.2	Required extensions						
	Berkeley sockets						
	Internet domain support						
	UNIX domain support (desirable)						
	Stream, datagram, and raw sockets						
	Socket Interface to TLI (if TLI)						
	Asynchronous I/O						
	Shared virtual memory						
	Independent memory contexts						
	Semaphores						
	Simultaneous process capabilities						
3.2.1.3	Reconfiguration						
3.2.1.3	Self optimization (desirable)						
3.2.1.4	Device drivers						
	Sample character device driver						
	Sample networking device driver						
3.2.1.5	Source code						
3.2.1.6	Process priority						
3.2.1.7	System monitoring						
	Network statistics (ARP) (desirable)						
	Available while running (desirable)						
	CPU utilization statistics (desirable)						
	Available while running (desirable)						
	Memory utilization statistics (desirable)						
	Available while running (desirable)						
3.2.1.8	Internet Domain service						
	Resolve (3)						
	Named (8)						
3.2.1.9	RPC						
3.2.1.10	NFS						
	AFS (desirable)						

Specification Reference	Item Description	Features					Comments
		A	O	P	R	N	
3.2.1.11	Yellow Pages						
3.2.1.12	Standard UNIX signals						
	List of signals						
3.2.1.13	Disk quota system (desirable)						
3.2.1.14	Rexec						
3.1, 3.2.1.15	Console messages						
3.2.1.16	System loading capability						
	Remote loading capability (desirable)						
3.2.1.17	IEEE Floating point standard						
	Big Endian interface ability						
3.2.2.1	File systems (BSD 4.3, SYS V.3, or SYS V.4)						
	Long file names						
	Symbolic links						
3.2.2.2	O/S, utilities, etc. storage						
	Swapping to additional disk (desirable)						
3.2.2.3	User license						
3.3.1	Compilers						
	All modules callable from all languages						
	Debugger interface						
	Levels of optimization						
	31 character variable names						
	FORTRAN						
	Required character set						
	Hollerith constants						
	Case folding						
	Hex I/O formats						
	Types						
	IMPLICIT NONE						
	DO WHILE/END DO						
	FORTRAN 8/9x (desirable)						
	Structures (desirable)						
	Include files (desirable)						
	Header files (desirable)						

Specification Reference	Item Description	Features					Comments
		A	O	P	R	N	
	UNIX I/O calls (desirable)						
	VAX FORTRAN extensions (desirable)						
	C						
	ANSI C (desirable)						
	C++						
	Pascal (desirable)						
3.3.2	Linker						
	External names significant in all positions						
	Dynamic linking with shared libraries (desirable)						
3.3.3	Debugger						
	All Languages						
	X Window environment						
	Separate window for debugger						
	BSD 4.3 DBX						
	Assembly language debugger						
	Handle Multiple Processes (desirable)						
3.3.4, 3.5.2	Network utilities						
	UNIX "r" commands						
	Network utilities						
	Telnet						
	FTP						
	/etc/services						
	Inetd (8)						
3.3.5	Backup and archive features						
	tar(1) and cpio(1)						
	dump(8), rdump(8), etc. (desirable)						
	Automated file migration software (desirable)						
3.3.6	Shells						
	C shell (with Berkeley style job control)						
	Bourne shell						
	Korn shell (desirable)						
3.3.7	Tape management software (desirable)						
	Allocate/mount by volume name (desirable)						

Specification Reference	Item Description	Features					Comments
		A	O	P	R	N	
	ANSI labelled tape support (desirable)						
3.4.3.1	GKS level 2c						
3.4.3.1	GKS 3-D (desirable)						
3.4.3.3	PEX (desirable)						
3.4.3.5	CGM (desirable)						
3.4.3.6	Graphics input via keyboard and mouse						
	Crosshair (desirable)						
3.5.2, 3.5.3	TCP/IP (over Ethernet)						
3.3.4, 3.5.2	Telnet (over Ethernet)						
3.3.4, 3.5.2	FTP (over Ethernet)						
3.2.1.10, 3.5.2	NFS, SMTP (over Ethernet)						
3.5.3	DECnet (Phase IV end-node) (over Ethernet)						
3.5.3	LAT (desirable) (over Ethernet)						

Specification Reference	Item Description	Features					Comments
		A	O	P	R	N	
3.2.1.1	**Front-end: Type (1) Workstation, UNIX O/S (SVID 3.2)**						
	POSIX compliance (desirable)						
3.2.1.2	Required extensions						
	Berkeley sockets						
	Internet domain support						
	UNIX domain support (desirable)						
	Stream, datagram, and raw sockets						
	Socket interface to TLI (if TLI)						
	Asynchronous I/O						
	Shared virtual memory						
	Independent memory contexts						
	Semaphores						
	Simultaneous process capabilities						
3.2.1.3	Reconfiguration						
3.2.1.3	Self optimization (desirable)						
3.2.1.4	Device drivers						
	Sample character device driver						
	Sample networking device driver						
3.2.1.5	Source code						
3.2.1.6	Process priority						
3.2.1.7	System monitoring						
	Network statistics (ARP) (desirable)						
	Available while running (desirable)						
	CPU utilization statistics (desirable)						
	Available while running (desirable)						
	Memory utilization statistics (desirable)						
	Available while running (desirable)						
3.2.1.8	Internet Domain service						
	Resolve (3)						
	Named (8)						
3.2.1.9	RPC						
3.2.1.10	NFS						
	AFS (desirable)						

Specification Reference	Item Description	Features					Comments
		A	O	P	R	N	
3.2.1.11	Yellow Pages						
3.2.1.12	Standard UNIX signals						
	List of signals						
3.2.1.13	Disk quota system (desirable)						
3.2.1.14	Rexec						
3.2.1.15	Console messages						
3.2.1.16	System loading capability						
	Remote loading capability (desirable)						
3.2.1.17	IEEE Floating point standard						
	Big Endian interface ability						
3.2.2.1	File systems (BSD 4.3, SYS V.3, or SYS V.4)						
	Long file names						
	Symbolic links						
3.2.2.2	O/S, utilities, etc. storage						
	Swapping to additional disk (desirable)						
3.2.2.3	User license						
3.3.1	Compilers						
	All modules callable from all languages						
	Debugger interface						
	Levels of optimization						
	31 character variable names						
	FORTRAN						
	Required character set						
	Hollerith constants						
	Case folding						
	Hex I/O formats						
	Types						
	IMPLICIT NONE						
	DO WHILE/END DO						
	FORTRAN 8/9x (desirable)						
	Structures (desirable)						
	Include files (desirable)						
	Header files (desirable)						

Specification Reference	Item Description	Features A	O	P	R	N	Comments
	UNIX I/O calls (desirable)						
	VAX FORTRAN extensions (desirable)						
	C						
	ANSI C (desirable)						
	C++						
	Pascal (desirable)						
3.3.2	Linker						
	External names significant in all positions						
	Dynamic linking with shared libraries (desirable)						
3.3.3	Debugger						
	All Languages						
	X Window environment						
	Separate window for debugger						
	BSD 4.3 DBX						
	Assembly language debugger						
	Handle Multiple Processes (desirable)						
3.3.4,3.5.2	Network utilities						
	UNIX "r" commands						
	Network utilities						
	Telnet						
	FTP						
	/etc/services						
	Inetd (8)						
3.3.5	Backup and archive features						
	tar(1) and cpio(1)						
	dump(8), rdump(8), etc. (desirable)						
	Automated file migration software (desirable)						
3.3.6	Shells						
	C shell (with Berkeley style job control)						
	Bourne shell						
	Korn shell (desirable)						
3.3.7	Tape management software (desirable)						
	Allocate/mount by volume name (desirable)						

Specification Reference	Item Description	Features					Comments
		A	O	P	R	N	
	ANSI labelled tape support (desirable)						
3.3.8, 3.5.2	X Window system						
	X11R3						
	X11R4 (desirable)						
	Standard window managers						
3.3.9	GUI (Motif, desirable)						
3.4.1.1	Graphics capabilities						
	Primitives						
	Image rendering						
	Dimensional capabilities						
	Performance optimization						
3.4.3.1	GKS level 2c						
3.4.3.1	GKS 3-D						
3.4.3.2	PHIGS						
3.4.3.3	PHIGS+ (desirable)						
3.4.3.3	PEX (desirable)						
3.4.3.5	CGM (desirable)						
3.4.3.6	Graphics input via keyboard and mouse						
	Crosshair (desirable)						
3.5.2, 3.5.3	TCP/IP (over Ethernet)						
3.3.4, 3.5.2	Telnet (over Ethernet)						
3.3.4, 3.5.2	FTP (over Ethernet)						
3.2.1.10, 3.5.2	NFS, SMTP (over Ethernet)						
3.5.3	DECnet (Phase IV end-node) (over Ethernet)						
3.5.3	LAT (desirable) (over Ethernet)						

Specification Reference	Item Description	Features					Comments
		A	O	P	R	N	
3.2.1.1	**Front-end: Type (2) Workstation, UNIX O/S (SVID 3.2)**						
	POSIX compliance (desirable)						
3.2.1.2	Required extensions						
	Berkeley sockets						
	Internet domain support						
	UNIX domain support (desirable)						
	Stream, datagram, and raw sockets						
	Socket interface to TLI (if TLI)						
	Asynchronous I/O						
	Shared virtual memory						
	Independent memory contexts						
	Semaphores						
	Simultaneous process capabilities						
3.2.1.3	Reconfiguration						
3.2.1.3	Self optimization (desirable)						
3.2.1.4	Device drivers						
	Sample character device driver						
	Sample networking device driver						
3.2.1.5	Source code						
3.2.1.6	Process priority						
3.2.1.7	System monitoring						
	Network statistics (ARP) (desirable)						
	Available while running (desirable)						
	CPU utilization statistics (desirable)						
	Available while running (desirable)						
	Memory utilization statistics (desirable)						
	Available while running (desirable)						
3.2.1.8	Internet Domain service						
	Resolve (3)						
	Named (8)						
3.2.1.9	RPC						
3.2.1.10	NFS						
	AFS (desirable)						

Specification Reference	Item Description	Features					Comments
		A	O	P	R	N	
3.2.1.11	Yellow Pages						
3.2.1.12	Standard UNIX signals						
	List of signals						
3.2.1.13	Disk quota system (desirable)						
3.2.1.14	Rexec						
3.2.1.15	Console messages						
3.2.1.16	System loading capability						
	Remote loading capability (desirable)						
3.2.1.17	IEEE Floating point standard						
	Big Endian interface ability						
3.2.2.1	File systems (BSD 4.3, SYS V.3, or SYS V.4)						
	Long file names						
	Symbolic links						
3.2.2.2	O/S, utilities, etc. storage						
	Swapping to additional disk (desirable)						
3.2.2.3	User license						
3.3.1	Compilers						
	All modules callable from all languages						
	Debugger interface						
	Levels of optimization						
	31 character variable names						
	FORTRAN						
	Required character set						
	Hollerith constants						
	Case folding						
	Hex I/O formats						
	Types						
	IMPLICIT NONE						
	DO WHILE/END DO						
	FORTRAN 8/9x (desirable)						
	Structures (desirable)						
	Include files (desirable)						
	Header files (desirable)						

Specification Reference	Item Description	Features A	O	P	R	N	Comments
	UNIX I/O calls (desirable)						
	VAX FORTRAN extensions (desirable)						
	C						
	ANSI C (desirable)						
	C++						
	Pascal (desirable)						
3.3.2	Linker						
	External names significant in all positions						
	Dynamic linking with shared libraries (desirable)						
3.3.3	Debugger						
	All Languages						
	X Window environment						
	Separate window for debugger						
	BSD 4.3 DBX						
	Assembly language debugger						
	Handle Multiple Processes (desirable)						
3.3.4, 3.5.2	Network utilities						
	UNIX "r" commands						
	Network utilities						
	Telnet						
	FTP						
	/etc/services						
	Inetd (8)						
3.3.5	Backup and archive features						
	tar(1) and cpio(1)						
	dump(8), rdump(8), etc. (desirable)						
	Automated file migration software (desirable)						
3.3.6	Shells						
	C shell (with Berkeley style job control)						
	Bourne shell						
	Korn shell (desirable)						
3.3.7	Tape management software (desirable)						
	Allocate/mount by volume name (desirable)						

Specification Reference	Item Description	Features					Comments
		A	O	P	R	N	
	ANSI labelled tape support (desirable)						
3.3.8, 3.5.2	X Window system						
	X11R3						
	X11R4 (desirable)						
	Standard window managers						
3.3.9	GUI (Motif, desirable)						
3.4.2.1	Graphics capabilities						
	Primitives						
	Image rendering						
	Dimensional capabilities						
	Performance optimization						
3.4.3.1	GKS level 2c						
3.4.3.1	GKS 3-D						
3.4.3.2	PHIGS						
3.4.3.3	PHIGS+ (desirable)						
3.4.3.3	PEX (desirable)						
3.4.3.5	CGM (desirable)						
3.4.3.6	Graphics input via keyboard and mouse						
	Crosshair (desirable)						
3.5.2, 3.5.3	TCP/IP (over Ethernet)						
3.3.4, 3.5.2	Telnet (over Ethernet)						
3.3.4, 3.5.2	FTP (over Ethernet)						
3.2.1.10, 3.5.2	NFS, SMTP (over Ethernet)						
3.5.3	DECnet (Phase IV end-node) (over Ethernet)						
3.5.3	LAT (desirable) (over Ethernet)						

Specification Reference	Item Description	Features					Comments
		A	O	P	R	N	
3.2.1.1	**File Server: UNIX O/S (SVID 3.2)**						
	POSIX compliance (desirable)						
3.2.1.2	Required extensions						
	Berkeley sockets						
	Internet domain support						
	UNIX domain support (desirable)						
	Stream, datagram, and raw sockets						
	Socket interface to TLI (if TLI)						
	Asynchronous I/O						
	Shared virtual memory						
	Independent memory contexts						
	Semaphores						
	Simultaneous process capabilities						
3.2.1.3	Reconfiguration						
3.2.1.3	Self optimization (desirable)						
3.2.1.4	Device drivers						
	Sample character device driver						
	Sample networking device driver						
3.2.1.5	Source code						
3.2.1.6	Process priority						
3.2.1.7	System monitoring						
	Network statistics (ARP) (desirable)						
	Available while running (desirable)						
	CPU utilization statistics (desirable)						
	Available while running (desirable)						
	Memory utilization statistics (desirable)						
	Available while running (desirable)						
3.2.1.8	Internet Domain service						
	Resolve (3)						
	Named (8)						
3.2.1.9	RPC						
3.2.1.10	NFS						
	AFS (desirable)						
3.2.1.11	Yellow Pages						
3.2.1.12	Standard UNIX signals						
	List of signals						
3.2.1.13	Disk quota system (desirable)						

Specification Reference	Item Description	Features					Comments
		A	O	P	R	N	
3.2.1.14	Rexec						
3.2.1.15	Console messages						
3.2.1.16	System loading capability						
	Remote loading capability (desirable)						
3.2.1.17	IEEE Floating point standard						
	Big Endian interface ability						
3.2.3.1	File systems (BSD 4.3, SYS V.3, or SYS V.4)						
	Long file names						
	Symbolic links						
	Disk partitions on separate disks						
	Disk striping (desirable)						
	Disk spanning						
	System swap/page space						
3.2.3.2	User license						
3.3.1	Compilers						
	All modules callable from all languages						
	Debugger interface						
	Levels of optimization						
	31 character variable names						
	FORTRAN						
	Required character set						
	Hollerith constants						
	Case folding						
	Hex I/O formats						
	Types						
	IMPLICIT NONE						
	DO WHILE/END DO						
	FORTRAN 8/9x (desirable)						
	Structures (desirable)						
	Include files (desirable)						
	Header files (desirable)						
	UNIX I/O calls (desirable)						
	VAX FORTRAN extensions (desirable)						

Specification Reference	Item Description	Features					Comments
		A	O	P	R	N	
	C						
	ANSI C (desirable)						
	C++						
	Pascal (desirable)						
3.3.2	Linker						
	External names significant in all positions						
	Dynamic linking with shared libraries (desirable)						
3.3.3	Debugger						
	All Languages						
	X Window environment						
	Separate window for debugger						
	BSD 4.3 DBX						
	Assembly language debugger						
	Handle multiple processes (desirable)						
3.3.4, 3.5.2	Network utilities						
	UNIX "r" commands						
	Network utilities						
	Telnet						
	FTP						
	/etc/services						
	Inetd (8)						
3.3.5	Backup and archive features						
	tar(1) and cpio(1)						
	dump(8), rdump(8), etc. (desirable)						
	Automated file migration software (desirable)						
3.3.6	Shells						
	C shell (with Berkeley style job control)						
	Bourne shell						
	Korn shell (desirable)						
3.3.7	Tape management software (desirable)						
	Allocate/mount by volume name (desirable)						
	ANSI labelled tape support (desirable)						
3.3.8, 3.5.2	X Window system						

Specification Reference	Item Description	Features					Comments
		A	O	P	R	N	
	X11R3						
	X11R4 (desirable)						
	Standard window managers						
3.3.9	GUI (Motif, desirable)						
3.4.3.6	Graphics input via keyboard and mouse (desirable)						
3.5.2, 3.5.4	TCP/IP (Ethernet, FDDI)						
3.3.4, 3.5.2	Telnet (Ethernet, FDDI)						
3.3.4, 3.5.2	FTP (Ethernet, FDDI)						
3.2.1.10, 3.5.2	NFS, SMTP (Ethernet, FDDI)						
3.5.3	DECnet (Phase IV end-node) (Ethernet, FDDI)						
3.5.3	LAT (desirable) (Ethernet, FDDI)						

Specification Reference	Item Description	Features					Comments
		A	O	P	R	N	
3.2.1.1	**Batch processing ranch: UNIX O/S (SVID 3.2)**						
	POSIX compliance (desirable)						
3.2.1.2	Required extensions						
	Berkeley sockets						
	Internet domain support						
	UNIX domain support (desirable)						
	Stream, datagram, and raw sockets						
	Socket interface to TLI (if TLI)						
	Asynchronous I/O						
	Shared virtual memory						
	Independent memory contexts						
	Semaphores						
	Simultaneous process capabilities						
3.2.1.3	Reconfiguration						
3.2.1.3	Self optimization (desirable)						
3.2.1.4	Device drivers						
	Sample character device driver						
	Sample networking device driver						
3.2.1.5	Source code						
3.2.1.6	Process priority						
3.2.1.7	System monitoring						
	Network statistics (ARP) (desirable)						
	Available while running (desirable)						
	CPU utilization statistics (desirable)						
	Available while running (desirable)						
	Memory utilization statistics (desirable)						
	Available while running (desirable)						
3.2.1.8	Internet Domain service						
	Resolve (3)						
	Named (8)						
3.2.1.9	RPC						
3.2.1.10	NFS						
	AFS (desirable)						

Specification Reference	Item Description	Features					Comments
		A	O	P	R	N	
3.2.1.11	Yellow Pages						
3.2.1.12	Standard UNIX signals						
	List of signals						
3.2.1.13	Disk quota system (desirable)						
3.2.1.14	Rexec						
3.2.1.15	Console messages						
3.2.1.16	System loading capability						
	Remote loading capability (desirable)						
3.2.1.17	IEEE Floating point standard						
	Big Endian interface ability						
3.2.4.1	Symmetric Multiprocessing						
3.2.4.2	Process locking						
3.2.4.3	File systems (BSD 4.3, SYS V.3, or SYS V.4)						
	Long file names						
	Symbolic links						
	Disk partitions on separated disks						
	Disk striping (desirable)						
	Disk spanning						
	System swap/page space						
	Partitions on separate disks						
3.2.4.4	User license						
3.3.1	Compilers						
	All modules callable from all languages						
	Debugger interface						
	Levels of optimization						
	31 character variable names						
	FORTRAN						
	Required character set						
	Hollerith constants						
	Case folding						
	Hex I/O formats						
	Types						
	IMPLICIT NONE						

Specification Reference	Item Description	Features A	O	P	R	N	Comments
	DO WHILE/END DO						
	FORTRAN 8/9x (desirable)						
	Structures (desirable)						
	Include files (desirable)						
	Header files (desirable)						
	UNIX I/O calls (desirable)						
	VAX FORTRAN extensions (desirable)						
	Parallelizing compiler (desirable)						
	C						
	Parallelizing compiler (desirable)						
	ANSI C (desirable)						
	C++						
	Parallelizing compiler (desirable)						
	Pascal (desirable)						
3.3.2	Linker						
	External names significant in all positions						
	Dynamic linking with shared libraries (desirable)						
3.3.3	Debugger						
	All Languages						
	X Window environment						
	Separate window for debugger						
	BSD 4.3 DBX						
	Assembly language debugger						
	Handle multiple processes (desirable)						
3.3.4, 3.5.2	Network utilities						
	UNIX "r" commands						
	Network utilities						
	Telnet						
	FTP						
	/etc/services						
	Inetd (8)						
3.3.5	Backup and archive features						
	tar(1) and cpio(1)						

Specification Reference	Item Description	Features					Comments
		A	O	P	R	N	
	dump(8), rdump(8), etc. (desirable)						
	Automated file migration software (desirable)						
3.3.6	Shells						
	C shell (with Berkeley style job control)						
	Bourne shell						
	Korn shell (desirable)						
3.3.7	Tape management software (desirable)						
	Allocate/mount by volume name (desirable)						
	ANSI labelled tape support (desirable)						
3.3.8, 3.5.2	X Window system						
	X11R3						
	X11R4 (desirable)						
	Standard window managers						
3.3.9	GUI (Motif, desirable)						
3.4.3.1	GKS level 2c						
3.4.3.1	GKS 3-D						
3.4.3.2	PHIGS						
3.4.3.3	PHIGS+ (desirable)						
3.4.3.3	PEX (desirable)						
3.4.3.5	CGM (desirable)						
3.4.3.6	Graphics input via keyboard and mouse						
	Crosshair (desirable)						
3.5.2, 3.5.5	TCP/IP (Ethernet, FDDI)						
3.3.4, 3.5.2	Telnet (Ethernet, FDDI)						
3.3.4, 3.5.2	FTP (Ethernet, FDDI)						
3.2.1.10, 3.5.2	NFS, SMTP (Ethernet, FDDI)						
3.5.3	DECnet (Phase IV end-node) (Ethernet, FDDI)						
3.5.3	LAT (desirable) (Ethernet, FDDI)						

Attachment D. Services Feature Worksheet

Specification Reference	Item Description	Features A	O	P	R	N	Comments
3.6	**Front-end: Type (0) Workstation, Services**						
3.6	Installation						
3.6.3	Documentation, Hardware						
	Available on-line (desirable)						
3.6.3	Documentation, Software						
	Available on-line (desirable)						
3.6.1	Hardware Maintenance						
	4-hour response time (desirable)						
	Local supply of critical components (desirable)						
	Accountable tracking system (desirable)						
	Base year (desirable levels to be quoted)						
	First Option year						
	Second Option year						
	Third Option year						
	Fourth Option year						
3.6.1	Software Maintenance						
	Base year						
	First Option year						
	Second Option year						
	Third Option year						
	Fourth Option year						
3.6.2	Training, System management per student						
3.6.2	Training, Operations per student						
3.6.2	Training, UNIX, Languages, Debugger per student						
3.6, 3.6.1	On-site Engineering Support						
	Base year						
	First Option year						
	Second Option year						
	Third Option year						
	Fourth Option year						

Attachment D. Services Feature Worksheet

Specification Reference	Item Description	Features A	O	P	R	N	Comments
3.6	**Front-end: Type (1) Workstation, Services**						
3.6	Installation						
3.6.3	Documentation, Hardware						
	Available on-line (desirable)						
3.6.3	Documentation, Software						
	Available on-line (desirable)						
3.6.1	Hardware Maintenance						
	4-hour response time (desirable)						
	Local supply of critical components (desirable)						
	Accountable tracking system (desirable)						
	Base year (desirable levels to be quoted)						
	First Option year						
	Second Option year						
	Third Option year						
	Fourth Option year						
3.6.1	Software Maintenance						
	Base year						
	First Option year						
	Second Option year						
	Third Option year						
	Fourth Option year						
3.6.2	Training, System management per student						
3.6.2	Training, Operations per student						
3.6.2	Training, UNIX, Software, Debugger per student						
3.6, 3.6.1	On-site Engineering Support						
	Base year						
	First Option year						
	Second Option year						
	Third Option year						
	Fourth Option year						

Attachment D. Services Feature Worksheet

Specification Reference	Item Description	Features A	O	P	R	N	Comments
3.6	**Front-end: Type (2) Workstation, Services**						
3.6	Installation						
3.6.3	Documentation, Hardware						
	Available on-line (desirable)						
3.6.3	Documentation, Software						
	Available on-line (desirable)						
3.6.1	Hardware Maintenance						
	4-hour response time (desirable)						
	Local supply of critical components (desirable)						
	Accountable tracking system (desirable)						
	Base year (desirable levels to be quoted)						
	First Option year						
	Second Option year						
	Third Option year						
	Fourth Option year						
3.6.1	Software Maintenance						
	Base year						
	First Option year						
	Second Option year						
	Third Option year						
	Fourth Option year						
3.6.2	Training, System management per student						
3.6.2	Training, Operations per student						
3.6.2	Training, UNIX, Software, Debugger per student						
3.6, 3.6.1	On-site Engineering Support						
	Base year						
	First Option year						
	Second Option year						
	Third Option year						
	Fourth Option year						

Specification Reference	Item Description	Features A	O	P	R	N	Comments
3.6	**File Server: Services**						
3.6	Installation						
3.6.3	Documentation, Hardware						
	Available on-line (desirable)						
3.6.3	Documentation, Software						
	Available on-line (desirable)						
3.6.1	Hardware Maintenance						
	4-hour response time (desirable)						
	Local supply of critical components (desirable)						
	Accountable tracking system (desirable)						
	Full-time on-site support (desirable)						
	Base year (desirable levels to be quoted)						
	First Option year						
	Second Option year						
	Third Option year						
	Fourth Option year						
3.6.1	Software Maintenance						
	Base year						
	First Option year						
	Second Option year						
	Third Option year						
	Fourth Option year						
3.6.2	Training, System management per student						
3.6.2	Training, Operations per student						
3.6.2	Training, UNIX, Languages, Debugger per student						
3.6, 3.6.1	On-site Engineering Support						
	Base year						
	First Option year						
	Second Option year						
	Third Option year						
	Fourth Option year						

Attachment D. Services Feature Worksheet

Specification Reference	Item Description	Features A	O	P	R	N	Comments
3.6	**Batch Ranch: Services**						
3.6	Installation						
3.6.3	Documentation, Hardware						
	Available on-line (desirable)						
3.6.3	Documentation, Software						
	Available on-line (desirable)						
3.6.1	Hardware Maintenance						
	4-hour response time (desirable)						
	Local supply of critical components (desirable)						
	Accountable tracking system (desirable)						
	Full-time on-site support (desirable)						
	Base year (desirable levels to be quoted)						
	First Option year						
	Second Option year						
	Third Option year						
	Fourth Option year						
3.6.1	Software Maintenance						
	Base year						
	First Option year						
	Second Option year						
	Third Option year						
	Fourth Option year						
3.6.2	Training, System management per student						
3.6.2	Training, Operations per student						
3.6.2	Training, UNIX, Languages, Debugger per student						
3.6, 3.6.1	On-site Engineering Support						
	Base year						
	First Option year						
	Second Option year						
	Third Option year						
	Fourth Option year						