SSC PL-036
107 PAGES

ANL-HEP-TR-89-111

SSC SUBSYSTEM R&D PROPOSAL

Development of a Compensating Scintillator Plate Calorimeter System for the SSC

Ames Laboratory/Iowa State University

Argonne National Laboratory

Bicron Corporation

Florida State University

Louisiana State University

University of Mississippi

Oak Ridge National Laboratory

Virginia Polytechnic Institute and State University

Westinghouse Electric Corporation

University of Wisconsin

Spokesman: Harold Spinka
Argonne National Laboratory
(312) 972-6317

September 29, 1989

COLLABORATING INSTITUTIONS AND THEIR MEMBERS

Ames Laboratory/Iowa State University

Physicists
- H. B. Crawley
- W. T. Meyer
- E. I. Rosenberg

Electronic Engineer
- W. D. Thomas

Argonne National Laboratory

Physicists
- R. E. Blair
- L. E. Price
- J. Proudfoot (Asso. Prin. Invest.)
- H. Spinka (Prin. Invest.)
- R. Talaga
- H.-J. Trost
- D. Underwood
- A. B. Wicklund

Electronic Engineer
- J. W. Dawson

Mechanical Engineer
- A. Buehring
- N. Hill
- R. Noland
- E. Petereit

Bicron Corporation

C. Hurlbut, Manager, Organic Scintillator Group

Florida State University

Physicist
- V. Hagopian

Louisiana State University

Physicists
- R. Imlay
- R. McNeil
- W. Metcalf

University of Mississippi

Physicists
- J. Reidy
- L. Bolen
- L. Cremaldi
- D. Summers

Oak Ridge National Laboratory

Physicist
T. Gabriel

Virginia Polytechnic Institute

Physicists
J. R. Ficenec
B. Lu
L. Mo
L. E. Piilonen

Electronic Engineer
T. Nunamaker

Science and Technology Center
Westinghouse Electric Corporation

D. T. Hackworth, Manager, Electromechanics
R. J. Ravas, Electronics Engineer
T. F. Porter, Manager of Programs

University of Wisconsin

Physicists
D. Carlsmith
C. Foudas
D. Loveless
D. Reeder
W. H. Smith

Electronic Engineers
M. Jaworski
J. Lackey
P. Robb

TABLE OF CONTENTS

		Page
I.	Introduction	5
II.	Background and Motivation	7
III.	Physics-Related Design Issues	17
IV.	Computer Simulation Studies	23
V.	Mechanical Design	27
VI.	Calorimeter Electronics	41
VII.	Statement of Work	49
VIII.	Schedule and Costs	66

APPENDICES

A.	Sensitive Medium	72
B.	Options for the Position Measuring System	78
C.	Choice of Radiator	81
D.	Photon-Charge Transducers	85
E.	Data Communication by Fiber Optics	88
F.	Signal Processing Issues	90
G.	Detailed Budget Breakdown	98
H.	Proposer Vitae	108

I. INTRODUCTION

This is a proposal to the SSC Laboratory to conduct a three-year program of Subsystem R&D related to a general-purpose detector for the Supercollider. We propose to develop a "4π" calorimeter system to the level where detailed engineering and construction of the final device can begin. The design of this calorimeter is based on radiation-hard scintillator plates interspersed with dense passive plates of absorber material (uranium or lead). The work will be undertaken by the collaboration of University, Laboratory and Industry partners shown on the title page of this proposal.

The work proposed in this document includes:

- Simulation studies of SSC events to optimize the calorimeter design.

- Mechanical and structural designs for complete, properly-engineered barrel and end sections. This work includes the development necessary to choose an optimum radiator material for SSC application.

- Further development of radiation hard scintillators.

- The design of the scintillation light processing system, including sampling scintillator plates, the shifter plates, and the photon transducers, including the development or selection of prototype devices.

- The selection and test of an appropriate position-measuring device to be located inside the calorimeter.

- A conceptual design of a first-level electronic signal processing system, including the trigger and the analog signal pipelines, plus production of prototype devices for this design.

- The fabrication and test of prototype units of the resulting calorimeter system as a demonstration of feasibility. This work includes extensive

mechanical and optical testing, as well as measurements in particle beams.

The central theme of this proposal is to develop and demonstrate a complete system for detection and measurement of jets, photons, and electrons. The calorimeter will be optimized for SSC physics, will be hermetic, and will be buildable. Cost-effective technology that is currently available or that can clearly be implemented on the necessary time scale will be used. Since the performance of the calorimeter is intimately related to the readout electronics and the trigger, the design of the close-in electronics is an essential part of the development plan presented here.

In order to have detectors available to match the planned construction schedule of the SSC, it is mandatory to expeditiously pursue development programs such as the one proposed here. We, therefore, request timely support of this proposal so that work can begin in January 1990. This document presents a conservative design that seeks significant improvements in known technologies. It does not require the use of wholly unproven devices or technologies. Even so, the design and development work will take about two and a half years, spread over FY1990, FY1991, and FY1992, and the construction and checkout of a full-scale prototype module in a test beam will extend into FY1993.

The proposal document is organized with background and motivation for this approach covered in Sections II and III, followed by discussions of the design in Sections IV, V, and VI, a description of the proposed work in Section VII, and finally by a presentation of the costs and schedule in Section VIII. The Statement of Work and the Schedule and Cost sections identify specific tasks that will be performed by each of the proposing organizations, as well as the associated costs. More detailed discussions of the options to be investigated are given in the Appendices.

II. BACKGROUND AND MOTIVATION

Introduction

A major technical challenge facing the builders of a detector for the superconducting supercollider (SSC) is to achieve an optimum design for the calorimeter. This is because the dominant characteristic of the 40-TeV pp collisions will be final states containing jets of hadrons as well as leptons. The jets measure the high p_T processes that we now think are important, but they are also sensitive to a range of possible new phenomena since these jets are the manifestation in the laboratory of the partons that emerge from the hard collisions.

In addition to the jets from the primary partons, there will be copious production of the W and Z bosons, which must be identified via their decays to either jets or leptons. The bosons will also be a signature of new physics. The calorimeter must, therefore, measure jets as well as the electrons from heavy boson decays. A sensitivity to electrons within jets will also be important as a specific tag of a heavy quark final state.

We note that a calorimeter presents a general sensitivity to new physics in that it measures high energy electrons more accurately than any other particle can be measured by a complete SSC detector.

Physics Needs and Relationships

Let us give a specific example; a fundamental goal for an SSC experiment is to observe the production and decay of the Higgs boson, defined as the particle that is responsible for the spontaneous symmetry breaking and the generation of fermion and boson masses. In this scenario, the Higgs boson decays to the heaviest states energetically allowed, which in the mass range expected to be explored at the SSC, would mean decay to either the, as-yet undiscovered, top quark, or directly to the electroweak bosons, W and Z. It is, therefore, the necessary requirement to detect the decay products, both of the top quark and of these gauge bosons, in a large background of expected QCD processes, that sets the parameters of the calorimeter. Because of the low rate of Higgs production, it will be necessary to reconstruct the W and Z

bosons by observation of a peak in the two-jet invariant mass distribution in addition to the more straightforward leptonic decay channels, $e\nu$, e^+e^-, $\mu\nu$, $\mu^+\mu^-$. Such requirements translate into the needed calorimeter parameters: jet energy resolution and transverse segmentation with the subsequent measurement precision of jets to obtain the necessary signal to noise in the two-jet invariant mass distribution; electromagnetic energy resolution and granularity for the $e\pi$ separation necessary to identify the electrons; and hermeticity for the measurement of neutrinos via observation of events with missing transverse energy. These requirements on jet, electron, and neutrino measurements are by no means a unique property of this process but are, in fact, characteristic of a complete class of "discovery" processes, and it is within this context that issues concerning calorimeter performance must be addressed.

The characteristics of the other elements that make up the overall detector also play a role in the choice of calorimeter parameters and must be included in the system design when assessing the calorimeter performance. These include the resolution of the inner tracking system, the choice of magnetic field strength, and the radius and length of the solenoidal magnet. A number of tradeoffs will be necessary in optimizing the design of the complete detector. In order to provide a framework and the discipline of a specific design, we have chosen to consider a calorimeter that would be used with the so-called FAST detector shown in Figs. 1 and 2. Of course, the final calorimeter design can be tailored to accommodate the geometry of any general-purpose detector in which the magnet coil lies inside the calorimeter.

Types of Calorimetry

To carry out the function of total energy measurement of showers caused by individual particles and by jets, a number of instrumental approaches and technologies have been used in high energy physics experiments. The calorimeters divide into two general classes: fully sensitive devices and energy sampling calorimeters. The calorimeter concept proposed here is a member of the second class. We now give a brief discussion of the two main types to motivate the choice we have made for this proposal.

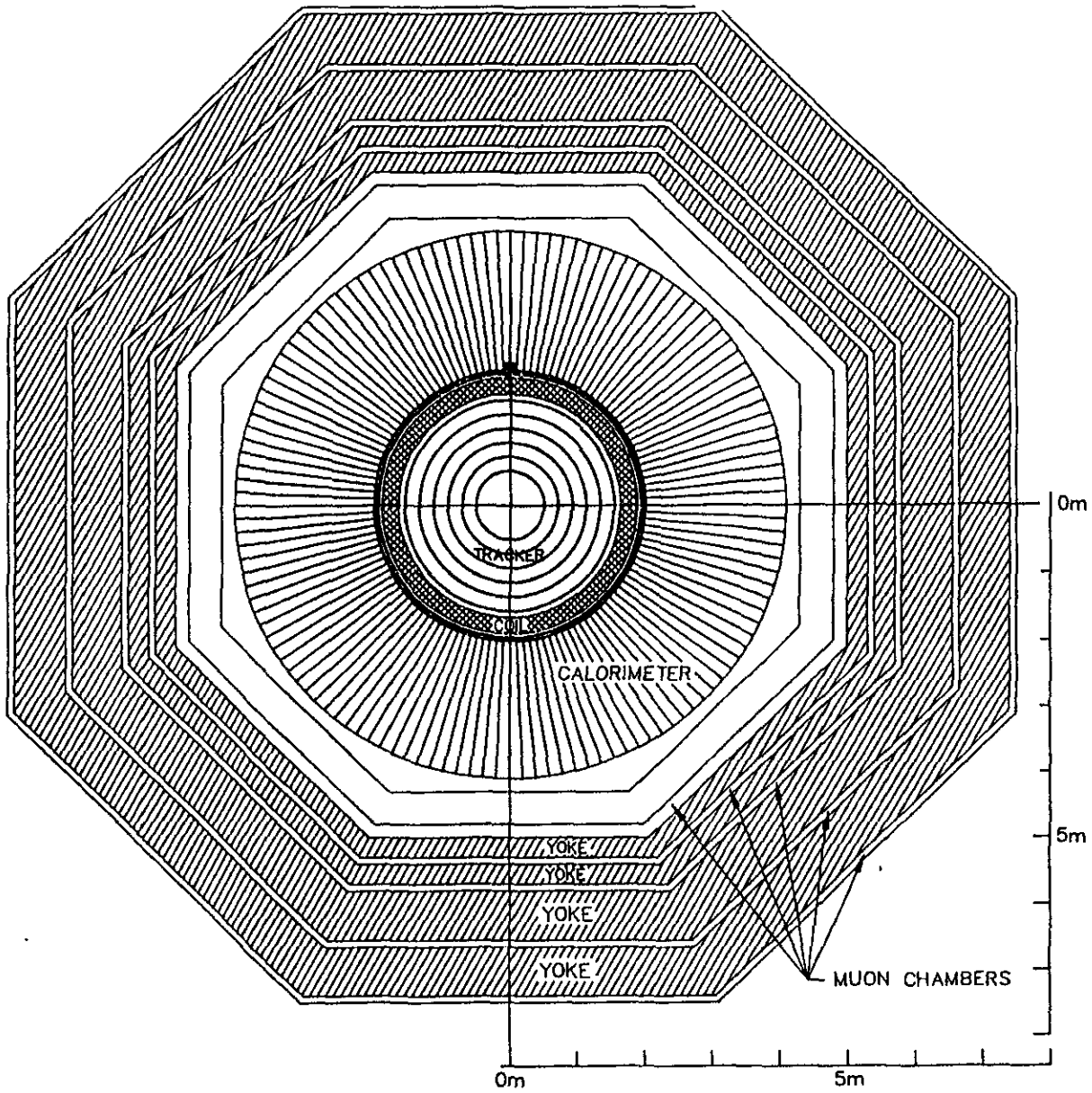

Fig. 1. Cross section of the proposed FAST detector perpendicular to the pp beam direction.

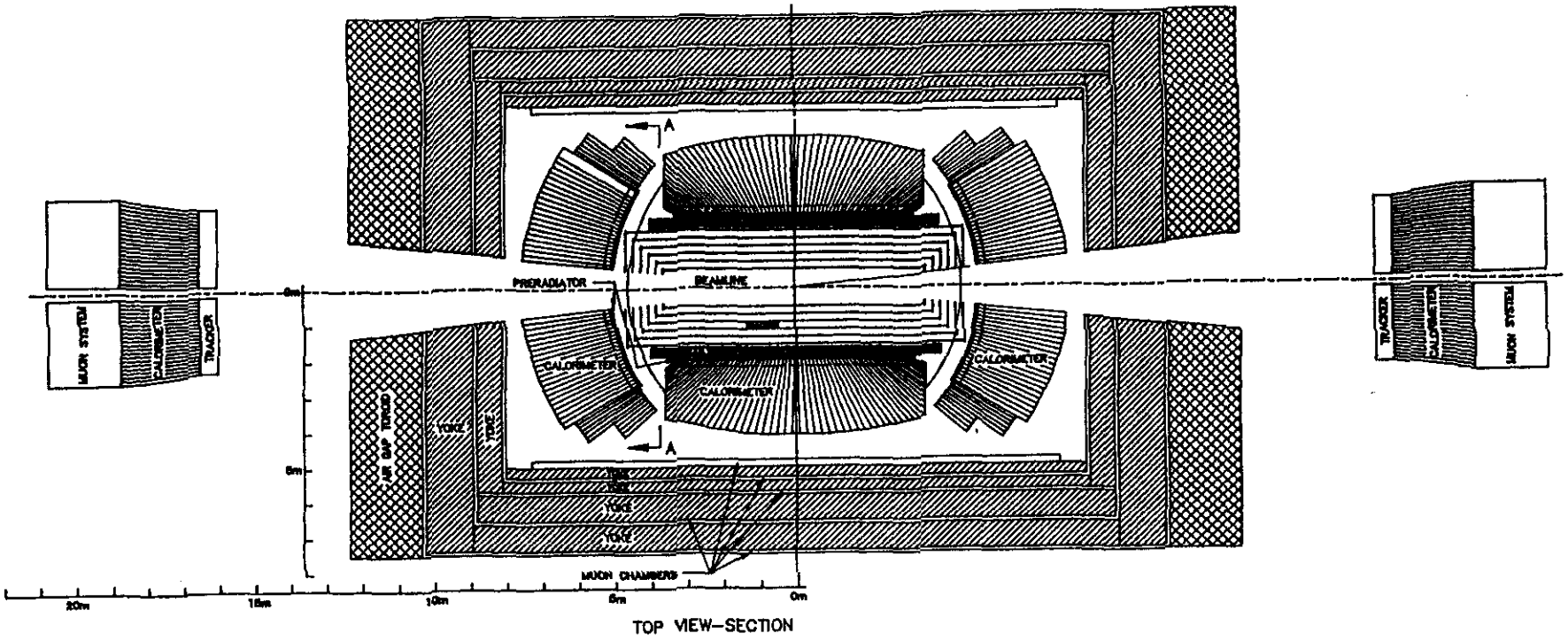

Fig. 2. Longitudinal cross section of the FAST detector.

Fully sensitive calorimeters are represented by dense, transparent radiator materials such as crystalline Si, NaI(Tℓ), CsI(Tℓ), BGO, Pb glass, and Pb perchlorate solution. These materials have been used extensively over the years for energy measurements of the electromagnetic particles (e, γ). They offer the best energy resolution for these particles, as well as very low energy hadrons, but are typically too expensive, and/or not sufficiently dense for application to high-energy hadron calorimetry. Furthermore, the known physics needs of the SSC program do not demand the ultimate resolution that is potentially available with this type of calorimeter. The radiator materials used in fully sensitive calorimeters are also typically subject to significant radiation-damage degradation of their performance. As a result of these deficiencies, fully sensitive calorimeters have not been considered appropriate for SSC application. We shall not consider them further in this proposal.

Sampling calorimeters, by contrast, mix sensitive materials (such as scintillator plastic, liquid argon, or silicon plates) with very dense, passive absorber material (such as uranium, lead, iron, or copper). Some of these calorimeters collect the light produced by the passage of ionizing shower particles in scintillating materials; others collect the ionization electrons produced by the shower particles. All seek to optimize the number of samples taken of the shower (sampling granularity) relative to the overall cost of the detector. The physics processes of interest determine the necessary resolution and, hence, the sampling granularity to be used in these devices.

There are very stringent operating requirements for an SSC calorimeter. In addition to the general questions of sampling granularity, transverse tower segmentation, longitudinal shower sampling, and total calorimeter thickness, the SSC imposes additional constraints related to the beam crossing rate of 62 MHz and the anticipated radiation damage of more than one Mrad per operating year. These requirements put severe constraints on the technologies that can be used for a sampling calorimeter.

Some liquid shower sampling media, such as liquid argon, are radiation-hard, but are slow compared to the 16 nsec beam-crossing time of the SSC. They also yield small signals, requiring special low-noise electronics. Solid sampling media such as plastic scintillator and intrinsic silicon are fast enough but may be subject to degradation of performance because of severe radiation damage. Crystalline silicon is not a feasible choice because of cost. Amorphous or polycrystalline silicon may offer possibilities for SSC calorimetry, but these materials have not so far been sufficiently developed. On balance, therefore, we believe that plastic scintillator is the material that is best matched to the demands of SSC physics and we concentrate on this technology.

The scintillator plastics that are commercially available are not sufficiently radiation-hard for a forward SSC calorimeter, particularly at shower max; they could be used in the barrel region. This is not, however, an intrinsic limitation of scintillator as such, and, in fact, samples of suitably radiation-hard scintillators have been made and tested. These materials can typically withstand a radiation dose of 10 Mrad, although the light emission is in the green part of the visible spectrum. There are good prospects for developing a new class of even more radiation tolerant scintillator that has light emission in the blue part of the visible spectrum, as we discuss in Appendix A. This prospect, taken together with all of the other already well-developed and favorable aspects of scintillator technology, represent the basis of our decision to actively follow this particular avenue.

The further development of radiation-hard scintillator is an essential part of the proposed investigations. Bicron Corp., one of the sponsors of this proposal, will take responsibility for this aspect of the work. Other groups are independently developing such scintillator, both in the U.S. (University of Florida and Nanoptics) and in Japan (Kyowa Gas Corp.). We strongly encourage these parallel investigations since scintillator is such an attractive detector material for carrying out SSC physics. We anticipate success in these scintillator development programs, but we will, in the mean time, pursue the application of the radiation-hard scintillators that are currently available.

A final consideration in making an optimum SSC calorimeter, given that scintillator-based sampling technology has been chosen, is the selection of the exact sampling topology. In most of the earlier calorimeters, a parallel-plate geometry has been used with shifter plates conveying the light to photomultiplier tubes located on the back surface of the calorimeter. This topology has become quite standard and one of the known weaknesses - the non-uniformity across modules boundaries - has been overcome.(1)

In recent years, a number of alternative topologies have been proposed. These include the so-called "spaghetti" calorimeters(2) in which scintillating fibers are configured as a radial array embedded in a lead matrix and the "scifi" calorimeters(3) in which wavelength-shifter fibers in various geometries replace the shifter plates of a conventional scintillator plate calorimeter. These new technologies are quite promising, although they have some obvious weaknesses.

The spaghetti calorimeters have difficulties in ensuring a uniformity of response for high energy electromagnetic showers. Attempts to mitigate this problem by tilting the shower axis have been suggested, but only a few test results are available. Scifi calorimeters may suffer from inefficient photon collection. The future capabilities of such calorimeters are unknown and can only be decided by more generic research. We plan to stay in close touch with the groups who are actively pursuing these other approaches to scintillation calorimetry so that our mutual experience can be pooled. Our collaboration will concentrate on perfection of the plate scintillator geometry used in many previous experiments.

Strengths of the Proposed Technology

Scintillator-based sampling-calorimeters have been used for much of the exciting physics of the last decade. The collaborations working at the CERN collider used them to make the first observations of the dominance of jets in the new energy range.(4) The seminal discovery of the electroweak bosons(5) was done by measuring their decay electrons in scintillator plate devices. More recently, the CDF collaboration has improved upon the granularity of the

CERN calorimeters allowing more detailed studies, both of the electroweak bosons and of jets, as well as more sensitive searches for new phenomena.[6] From these data, it is clear that such detectors are potentially well matched to the observation both of jets and of the decays of the bosons. We propose this type of calorimeter for our subsystem investigation as the best single technology currently available for SSC applications.

Scintillator plate calorimeters have several strengths: They give outstanding energy resolution for high energy electrons; their response is very fast, and so well-matched to the high data rates expected at the SSC; they can measure both the longitudinal and the lateral development of the showers; the construction is simple and allows insertion of position measuring devices in the calorimeter stack to provide an accurate spatial position of the electromagnetic shower, and finally, they require relatively few readout channels. Experience shows that such calorimeters are easy to commission and maintain, and they are reliable in operation. The response is very stable; for example, the CDF barrel calorimeter showed a variation of calibration of only a few percent during a 15-month period of collider operation.[7] A pion-to-electron rejection of 500:1 at 50 GeV can be achieved with the calorimeter alone, which allows a relatively background free measurement of the electrons from W decay even for such modest electron energies.

The ZEUS collaboration[8] has advanced this art by using depleted uranium instead of the lead or iron absorbers used in most previous detectors. The uranium provides active hadron shower compensation, as was first demonstrated by Fabjan and Willis and collaborators.[9] Together with the suppression of the electromagnetic response that comes from the use of a high Z radiator and a low Z sensitive medium, this choice gives an e/π ratio of unity with the combination of 3.3 mm ($1X_0$) uranium plates and 2.6 mm of scintillator. For a lead radiator, since the yield of neutrons in lead is about three times lower than uranium, a unit e/π ratio is achieved with a lead-to-scintillator thickness of about 3.5 for the same scintillator thickness. Therefore, a $1X_0$ sampling lead plate calorimeter requires the use of very thin scintillator tiles with the attendant problems of thickness tolerance and surface quality.

The jet energy resolution of the ZEUS uranium calorimeter is $\sigma_E/E = 35\%/\sqrt{E}$. This calorimeter is also being built with the finest cell granularity achieved to date with lateral dimensions of about 5 cm × 25 cm in the EMC section. The design is a suitable starting point for an SSC detector.

It is the objective of the authors of this proposal both to develop the technology to the limit of its current capability and to understand the strengths and limitations of this technique in an SSC environment.

References

1. The ZEUS Detector Status Report (1989).
2. P. Jenni et al., "The High Resolution Spaghetti Hadron Calorimeter," NIKHEF-H 87-07 (1987).
3. A. White, talk given at Tuscaloosa Calorimeter Workshop (1988).
4. M. Banner et al., Phys. Lett. 118B, 203 (1982).
5. G. Arnison et al., Phys. Lett. 122B, 103 (1983).
6. F. Abe et al., Phys. Rev. Lett. 62, 1825 (1989).
7. F. Abe et al., Phys. Rev. Lett. 63, 720 (1989).
8. The ZEUS Detector Technical Proposal (1986).
9. W. C. Fabjan and W. Willis, Phys. Lett. 60B, 105 (1975).
   C. W. Fabjan et al., Nucl. Instr. and Meth. 141, 61 (1977);

III. PHYSICS-RELATED DESIGN ISSUES

The key issues of calorimeter design that must be understood before embarking on the construction of a scintillator plate calorimeter for an SSC detector include:

i. Radiation-hard scintillators:

Survivability of the device in the high radiation fields that will result from the primary pp interactions must be ensured. As noted above, this requirement demands the development of practical scintillators with a proper combination of radiation hardness, optical emission at desired wavelengths, and manufacturability at reasonable cost. Ways of achieving these goals are discussed in Appendix A.

ii. Transverse and longitudinal granularity:

The transverse granularity question has been discussed in a number of studies,[1] and a tower size for jet energy measurements of 10 cm × 10 cm at a radius of 2 m is a reasonable choice. An important question is the extent to which the segmentation required for things like e/π separation and the energy flow in jets can be satisfied by a combination of the calorimeter cells, a charged particle tracker and some high-resolution position measuring devices near shower maximum in the electromagnetic part of the calorimeter. We discuss in Appendix B some technical options for this device. The question of longitudinal segmentation is somewhat simpler since the towers will be projective. At least two depth segments are required, one electromagnetic and one hadronic, but there may be advantages in further dividing the hadronic sections. For this proposal, we have tentatively chosen three-depth segments. To sharpen these choices, the specific response of the proposed calorimeter will be investigated by simulations of a variety of SSC events.

iii. Mechanical and optical geometry of the towers:

A mechanical and optical design is needed that ensures hermeticity and a uniformity of response, both within the towers and over module

boundaries. For several reasons, the towers should be projective to the pp interaction region. Perfectly projective towers suffer from the difficulty that showers coming from high energy photons incident on the cracks between modules can give large signals from Cerenkov radiation in the wavelength shifter plates. This problem has been solved for the ZEUS calorimeter[2] by a combination of a 40 to 80 mr tilt of the modules relative to a radius vector and the use of ~ 2 mm lead sheets between modules as seen in Fig. 3, which shows some test beam results of the response of two adjacent ZEUS modules as the beam is swept over the gap between them.

iv. Signal processing:-

The data handling to the level of the interface with other detector components must be established, and appropriate devices that implement the design architecture developed and built. These devices include the first-level calorimeter trigger, as well as analog storage pipelines. The short time between beam crossings, plus the high interaction rate, put severe constraints on the frequency response of the calorimeter and impacts the design of both the trigger and the DAQ system.

There are several other significant issues that are currently better understood but equally important in establishing a full calorimeter system. They include:

v. Calibration and stability questions:

Calibration of a plate calorimeter has proven to be relatively straightforward. Both the CDF and and the UA2 collaborations obtain an absolute energy calibration of better than 1.5% by using embedded radioactive sources. The CDF collaboration[3] has augmented this method by matching reconstructed track momenta to measured calorimeter energies for individual electrons from W decay. The resulting absolute scale calibration is good to ±0.4% with a cell-to-cell variation of less than 2%. Tests by the ZEUS collaboration indicate that they can achieve a

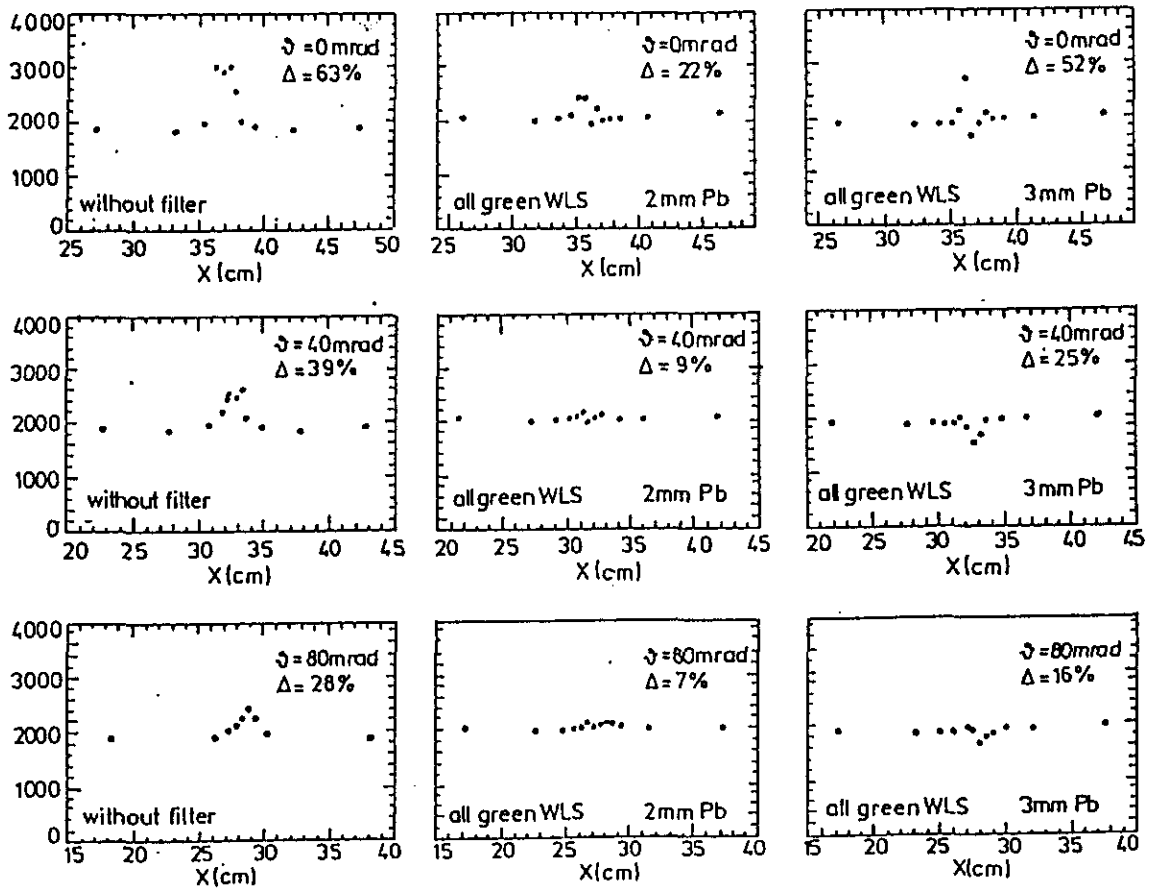

Fig. 3 *The response of prototype ZEUS forward calorimeter modules to a 5-GeV electron beam scanning over the wavelength-shifter gap. The data on the left shows the response for three angles of incidence with no material between the two modules. The center (right most) data has 2 mm (3 mm) lead sheets between the modules. The peaks seen in the left data essentially disappear when the modules have a 2 mm lead sheet between them, and the angle of incidence is non-zero.*

similar level of calibration using the natural radioactivity of uranium. We expect to adapt these methods for our proposed SSC calorimeter.

vi. Energy resolution for electrons and jets:

The required energy resolution both for electrons and for jets must be carefully studied. To understand this issue, some benchmark physics processes will be simulated[4] and their response to the calorimeter studied as a function of calorimeter parameters. The result will obviously be intimately connected with the choice of radiator material, the granularity of the towers, as well as the geometrical arrangement of the calorimeter modules. In this study, we will also consider the additional information that comes from other elements of the overall detector.

vii. Interface issues and questions:

Questions related to the interface with other components of the spectrometer must be studied and optimal solutions determined. For example, the advantages of providing a preradiator after the magnet coil and in front of the calorimeter must be understood. A second issue of this type is connected with the depth of high resolution calorimetry needed if an instrumented iron return yoke of the magnet is used as a lower resolution backing calorimeter. Finally, there is an obvious interaction between the materials used in the forward calorimeters and the need to return the magnetic flux of the detector solenoid. It is necessary both to shield the photomultipliers of the calorimeter and to ensure that the axial compressive forces on the coil are within an acceptable range. Some part of the calorimeter structure will probably need to be made of ferromagnetic material.

viii. Materials and methods:

The choices of sensitive and radiator materials, photon transducers, signal processing technology, and other calorimeter elements have

intimate interactions with the physics and structural needs. Our approaches to these topics are covered in the main text. More details are given in the Appendices.

As we have discussed previously, different geometries of absorber and sensitive medium are presently being considered by several collaborations. We feel that it is essential to continue the further development of the well understood plate-waveshifter readout of the towers as a basis for a conservative design that can meet the needed requirements. We shall also maintain awareness of the relative performance of less proven choices in the confident belief that the best technical solution will be chosen for the SSC detector at the point of decision for engineering design and construction.

The most important need that must be satisfied before proceeding to fabricate such a calorimeter is to have a realistic and buildable design. Although our current opinion is that depleted uranium is favored for the absorber, it is possible that there is a cost problem with this choice. We have, therefore, outlined in Appendix C a program to understand the costs of the radiator material and specifically to develop manufacturing techniques such that the cost of the depleted uranium plates will be minimized. In addition, optimized calorimeter designs will be made for both uranium and lead converters in order to allow a comparison of the cost effectiveness and the measurement quality provided by each. These results will guide the choice of medium to be used in the subsequent prototype construction and mechanical tests.

The authors of this proposal have considerable experience in the construction and operation of such calorimeters, and we are confident that answers to the critical questions will be available on the time scale relevant to making a final decision on the choice of calorimeter. The work breakdown and schedule outlined in the later section of the proposal is designed to provide these answers in the needed time frame. On the assumption that this technology will, in fact, be chosen for an SSC calorimeter, we have laid out a program that culminates in beam tests of a full-scale module in FY1993.

References

1. See, for example, the Report of the Large Solenoid Detector Group, Proc. of the Workshop on Experiments, Detectors, and Experimental Areas for the Supercollider, Berkeley, p. 340 (1987).

2. The ZEUS Detector Status Report 1989, pps. 5-108.

3. K. Abe et al., Phys. Rev. Lett. 63, 720 (1989).

4. See, for example, G. Alverson et al., "Experimental Searches for W/Z Pairs and Higgs Bosons at very High Energy Hadron-Hadron Colliders," Proc. of the 1986 Summer Study on the Physics of Superconducting Supercollider, p. 93.

IV. COMPUTER SIMULATION STUDIES

Many questions about optimizing the design of the calorimeter will need to be initially studied through computer-based event simulation. The four major issues that must be addressed are:

a. The demands that SSC physics places on the energy resolution, the granularity, and the hermeticity of the calorimeter.

b. The choice of the unit cell.

c. The detailed interaction between the mechanical design of the overall calorimeter and the required performance.

d. The effects that the solenoidal coil and support structure have on the performance of the calorimeter.

These questions mean that a number of different approaches to simulation will be required. Complete SSC events will be simulated in order to determine the overall calorimeter performance. These simulations need to be of some bellwether processes such as Higgs production with the Higgs decaying to two bosons, one of which, in turn, decays to a pair of quark jets. In addition to the signal reaction, a spectrum of more mundane, high-cross-section processes will be studied in order to understand the backgrounds. This part of the investigation will be pursued with a combination of an event generator such as ISAJET or PYTHIA and a fast version of GEANT, such as has been developed at Argonne for SSC use during the last two years.

In general, GEANT will be the program of choice when details of geometry are at question. Many of the simple questions can be answered with the fast Argonne version of this program which samples from fixed shower shapes instead of simulating all the physics processes of each individual shower.

Extensive simulation studies must be made to understand the appropriate choice and thicknesses of radiator and scintillator. This is a crucial

specific issue. The ZEUS collaboration[1] has shown, both by simulation and by measurement, that a combination of 3.3 mm of depleted uranium ($1X_0$), clad with 0.2 mm stainless steel, together with 2.6 mm of SCSN 38 scintillator, provides unit e/π and so an optimal hadronic energy resolution of $\sigma_E/E = 35\%/\sqrt{E}$. Tests made by the same group[2] of a lead scintillator test calorimeter show that $2X_0$ radiator plates are needed for the same scintillator thickness to achieve compensation. In this case, however, the measured energy resolution was poorer at $\sigma_E/E = 44\%/\sqrt{E}$.

A significant issue is to what extent one can vary the radiator material and/or thicknesses in depth, but yet still be insensitive to longitudinal shower fluctuations. Because of the neutrons, the compensation is non-local. In addition, the degree of compensation varies with the signal integration time because of things like the fission photons that are emitted late compared to the primary ionization. This means that the design of the DAQ system is intimately involved in a quantitative understanding of the compensation. The choice of radiator and sampling thickness, together with the appropriate scintillator thickness for compensation, requires a simulation code capable of handling low energy neutrons and photons, including sensitivity to the integration time dependence. The Birk's law dependence of the scintillator must also be known. The appropriate program for this part of the study is CALOR 89[3], written by the Oak Ridge group, which has a full simulation with, however, the attendant demands on computer resources. For some questions NEUKA[4], which is faster but involves some approximations could be used. Test beam measurements will be used to validate those calculations.

Finally, understanding the tradeoffs required for a realistic detector design demands a simulation of the effects of nonuniformities in the calorimeter structure. Such dead areas include the slots holding wavelength shifter plates for the readout of each cell and the internal and external structural members and supports. The region of the transition between the barrel and endcap parts of the calorimeter will need special attention as it is a notoriously difficult region in which to maintain a uniform calorimeter response. A combination of full and fast shower simulation will be needed to

explore the wide range of energy-sharing questions raised by geometric nonuniformities and to guide optimization of the mechanical design.

In addition, the effects of all of the material that is located inside of the calorimeter must be studied. By far, the most significant of these in terms of mass of material is the solenoidal coil of the detector with its associated support structure.

References

1. B. Anders et al., "Performance of a Uranium-Scintillator Calorimeter," DESY 86-105.

2. E. Bernardi et al., "Performance of a Compensating Lead-Scintillator Calorimeter," DESY 87-41.

3. T. A. Gabriel et al., Proc. of the Workshop on Detector Simulation for the SSC, ANL-HEP-CP-88-51, ed. Lawrence E. Price, p. 50.

4. H. Kowalski et al., "NEUKA - High Speed Monte Carlo with Neutron Component," Proc. of the Workshop on Detector Simulation for the SSC, ANL-HEP-CP-88-51, ed. Lawrence E. Price, p. 61.

V. MECHANICAL DESIGN

Statement of the Problem

In order to bound the problem, we have chosen to consider, as a starting point, a calorimeter that would be used with the so-called FAST detector, shown in Figs. 1 and 2. A thin superconducting solenoid providing a magnetic field of 2T is located immediately inside of the calorimeter and extends longitudinally to the end calorimeter sections.

We have initially chosen a calorimeter that offers a set of projective towers with a nominal front face area of 10 cm x 10 cm, and with a depth varying from 8 interaction lengths at 90° to the pp beam axis to 12 interaction lengths in the forward direction. The final tower size, including any necessary variation of the tower size with rapidity, will be specified after the completion of the simulation studies. All azimuthal angles will be covered, as well as polar angles in the range 5° to 175°. The mechanical and optical design should, ideally, allow no dead areas. This means that, in particular, the structural elements should minimize the inert material along any projection from the pp interaction point. The scintillator plates must be held securely in the structure, but with only a nominal pressure on the scintillator surfaces.

A secondary, but essential, set of constraints is provided by the need to provide for ease of manufacture, assembly, and servicing.

Mechanical Design Options

We have so far considered three conceptual solutions to these design challenges, the first of which is shown schematically in the cross section view of Fig. 2. In all of these solutions, the calorimeter is built from a number of modules that nest together to form the overall structure. In previous detectors, such modules have been designed to be mechanically stable as stand-alone units so that full coverage of the surfaces of the modules by the wavelength-shifter readout plates can be utilized without pressuring the plastic wavelength-shifter sheets.

In our present preliminary concept, the barrel calorimeter consists of 192 double modules, 64 in azimuth, and 3 modules along the beam direction. Each module is supported on a center rib, as shown in Fig. 4, and the uranium plates are separated from each other by 3 mm square metal spacers. The central rib is a principal structural element. It is highly stressed and since it is in the body of the calorimeter, the choice of material is severely constrained. The module stack is held together under the tension of a thin stainless steel skin outside of the wavelength shifter. This skin will incorporate any high Z absorber needed to ensure a uniform azimuthal response of the calorimeter.

In this design, the readout is done on one side of the scintillator stack. This solution requires only half of the channels needed for two-sided readout and minimizes the dead areas associated with the WLS but has no redundancy in case of a failure of a PMT readout channel.

Each set of three modules that make up the full length in Z is approximately 7.2 m long by 2 m in the direction perpendicular to the beam and 0.3 m in the azimuthal direction, with a total weight of 37 tons. Because of this size and weight, it is desirable to split the barrel into the three sections mentioned above. The sections will be bolted together after assembly. The modules will be designed without endplates so that there will be no inert material along the junction planes.

Because of the large radial depth and the need to have modules fill all azimuthal angles, including the horizontal, it is necessary to allow for a mutual support of all of the modules arranged in the barrel. This will be done at the inner and outer radii, but also at a number of points within the module at the boundaries between the EMC and the first hadronic section and between the two hadronic sections. At the inner radius, the front plates of the modules are locked together to form a continuous ring girder. At the outer radius, a split T-beam provides a strong back from which the total weight of the module can hang, and which provides a base on which to build the modules. These T-beams are connected together at the position of the PMT's to again form a continuous ring girder, as shown in the detail of Fig. 5.

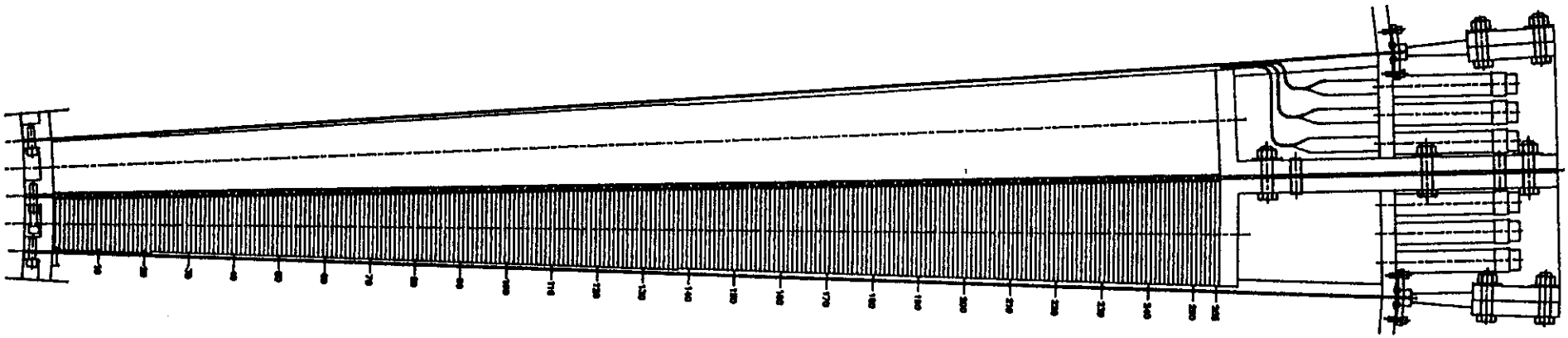

Fig. 4. Barrel calorimeter double module.

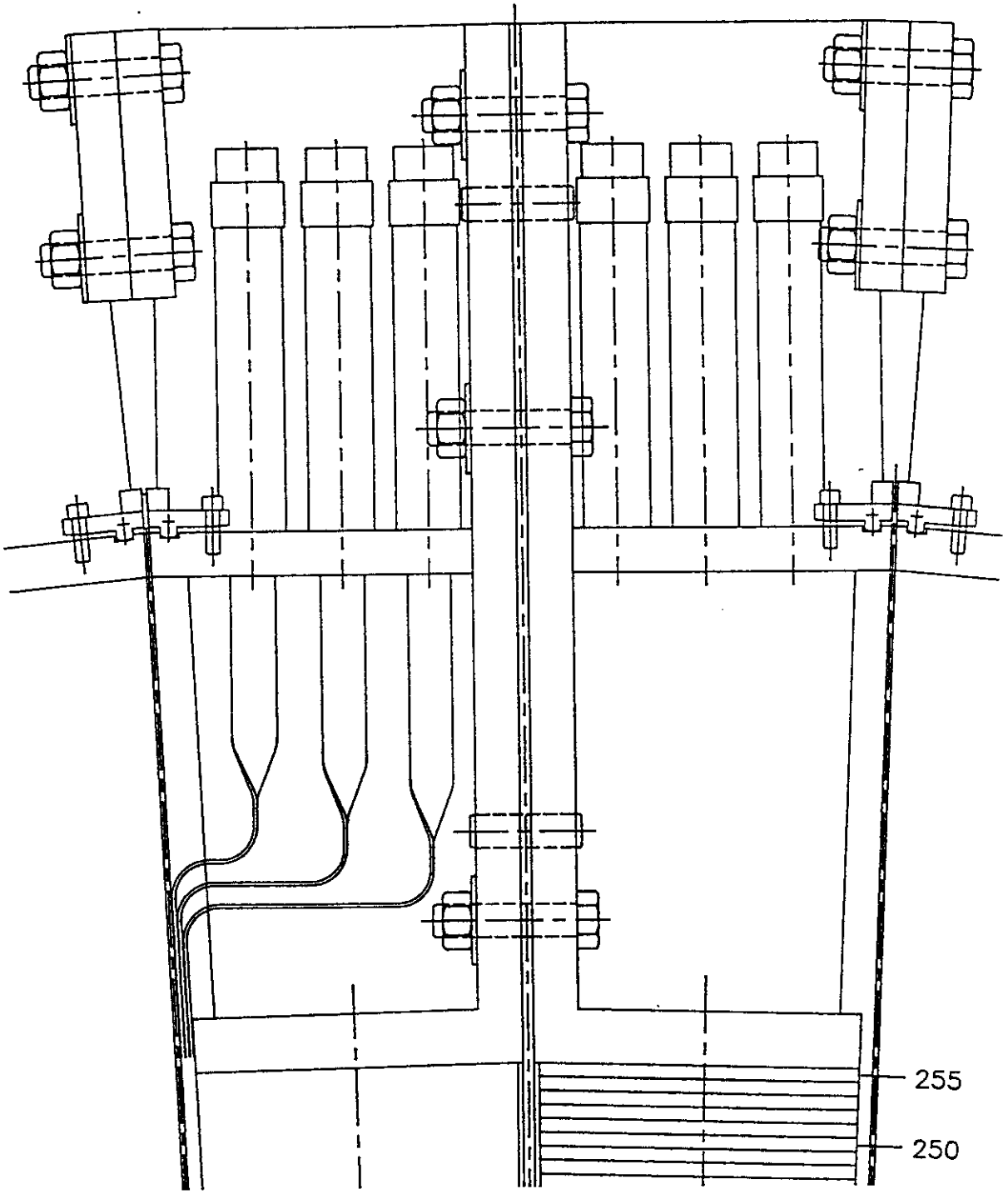

Fig. 5. Mechanical and optical layout at back of module.

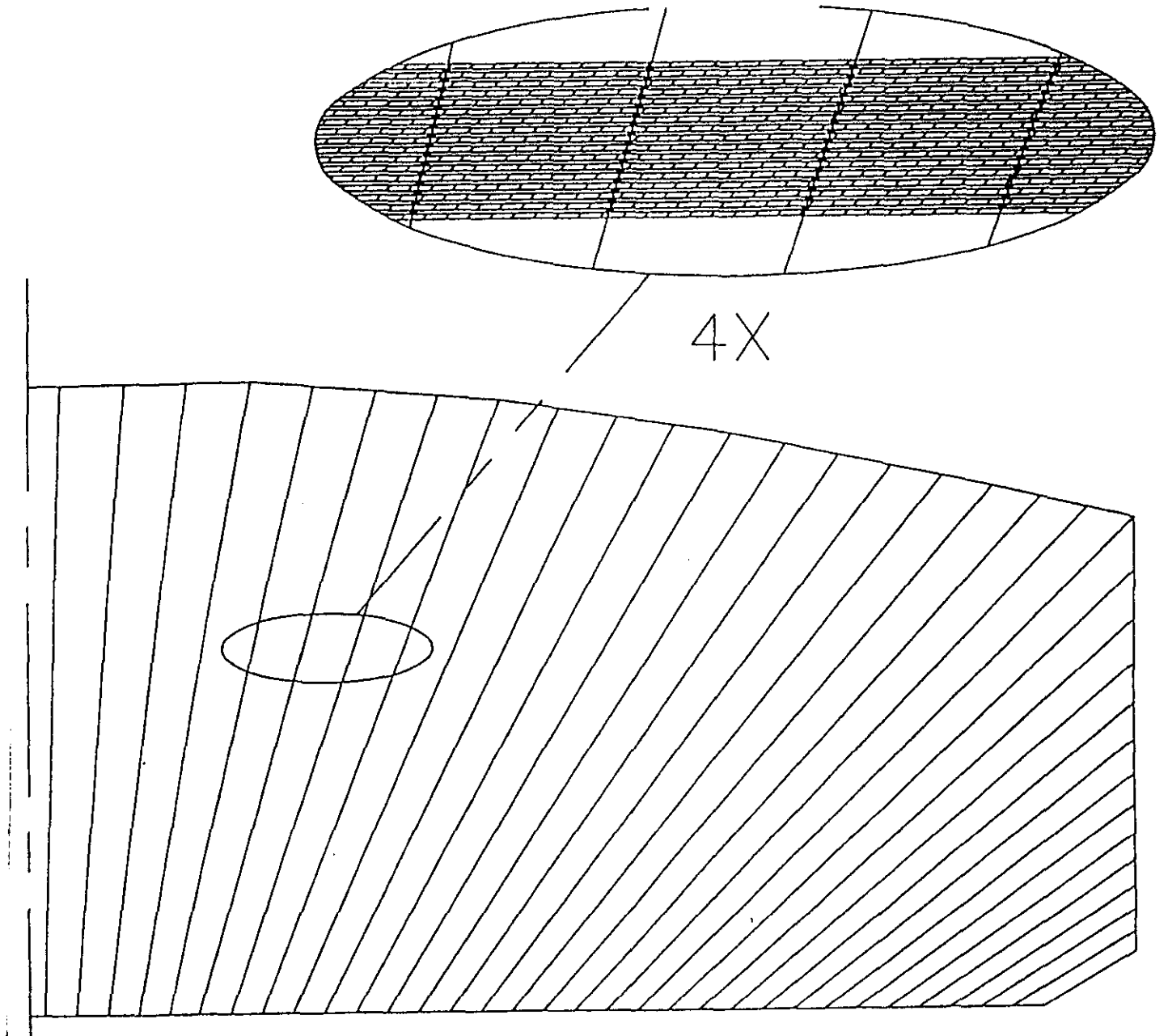

Fig. 6. Arrangement of wavelength shifter plates in a barrel module.

Figure 6 shows the side view of a quarter section of a BCAL module to illustrate the layout of the wavelength shifter plates, and the arrangement of the spacers between the scintillator tiles.

The endcap calorimeter is built with the same geometry as the barrel except that now the axis of rotation is vertical. This again ensures that the towers are projective. Since the uranium plates are vertical, the mechanical constraints are more relaxed than is the case for the barrel. There are 44 double modules in the central part of the endcap calorimeters. Each of these modules is approximately 2.4 m deep by 6.75 m high and 0.25 m thick and weighs 35 tons. Above and below the beamline, twelve half height special modules fill in the central region.

A beam's eye view of the calorimeter front face is shown in Fig. 7.

Although the uranium radiator plates are arranged to be normal to a radius vector for particle emission along the equator (for the barrel), and in the horizontal plane (for the endcap), at other emission angles, the plates will subtend different thicknesses. In the barrel region, the effective thickness varies from unity at $\theta = 90^{\circ}$ to 1.9 at $\theta = 32^{\circ}$. In the extreme forward angle of the endcap region, there is a modest azimuthal variation of effective thickness from unity in the horizontal plane to 1.18 in the vertical plane.

The transitional region between the barrel and endcap always provides a particularly difficult conceptual challenge. The overall calorimeter design, shown in Fig. 2, has a certain elegance in that the modules in the barrel region are essentially identical to each other. This is also the case for the endcap modules. Such a solution minimizes the number of parts needed, including spare modules. However, this design has gaps in depth in the hadronic calorimeter for those jets that are incident in the barrel-endcap overlap region. This is clearly undesirable. These gaps can be partially filled by extending the barrel at the top and bottom, as shown in Fig. 8, but the thickness of the barrel calorimeter means that the gap can be only partially filled.

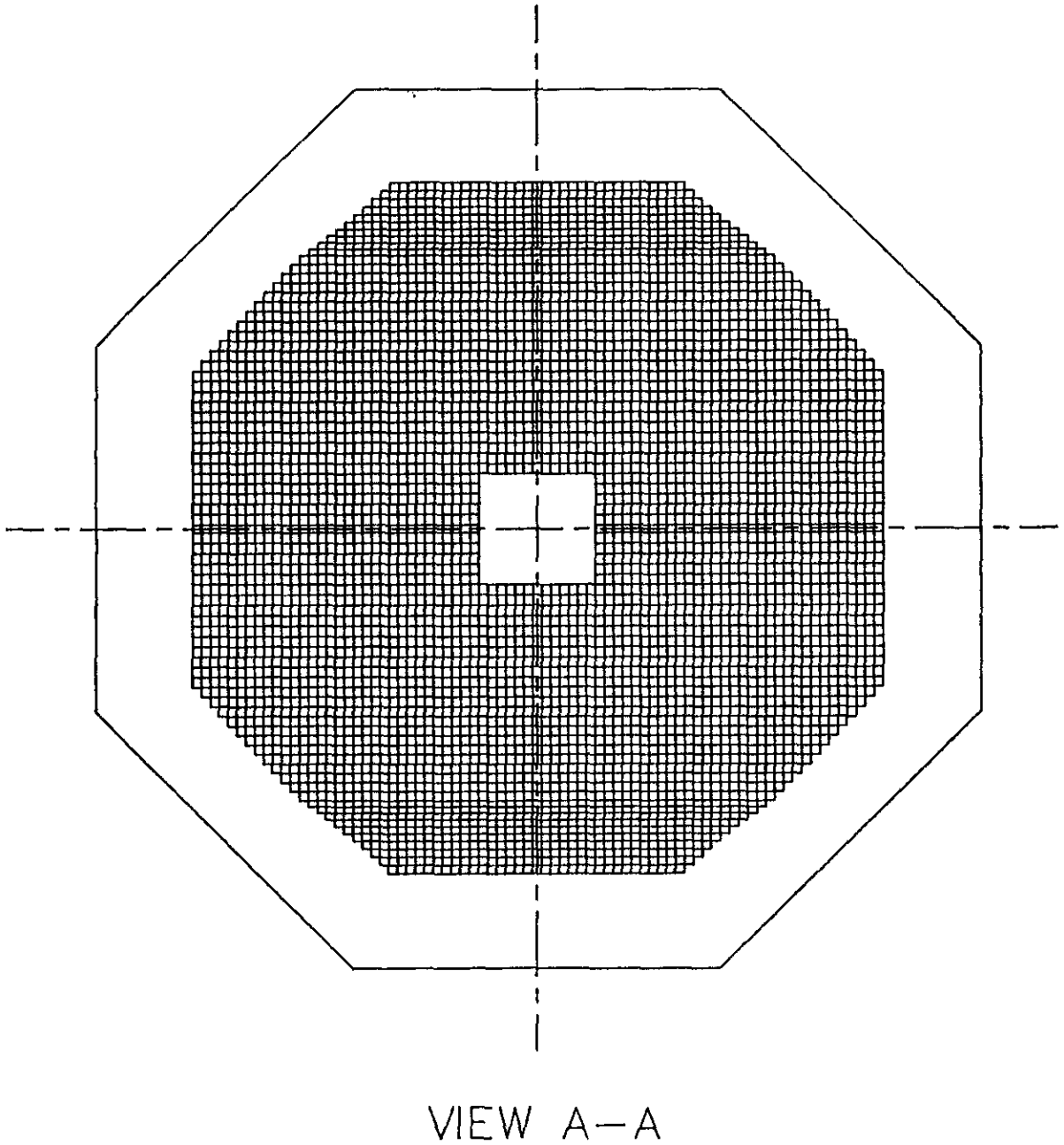

Fig. 7. *Beam's eye view of the forward calorimeter.*

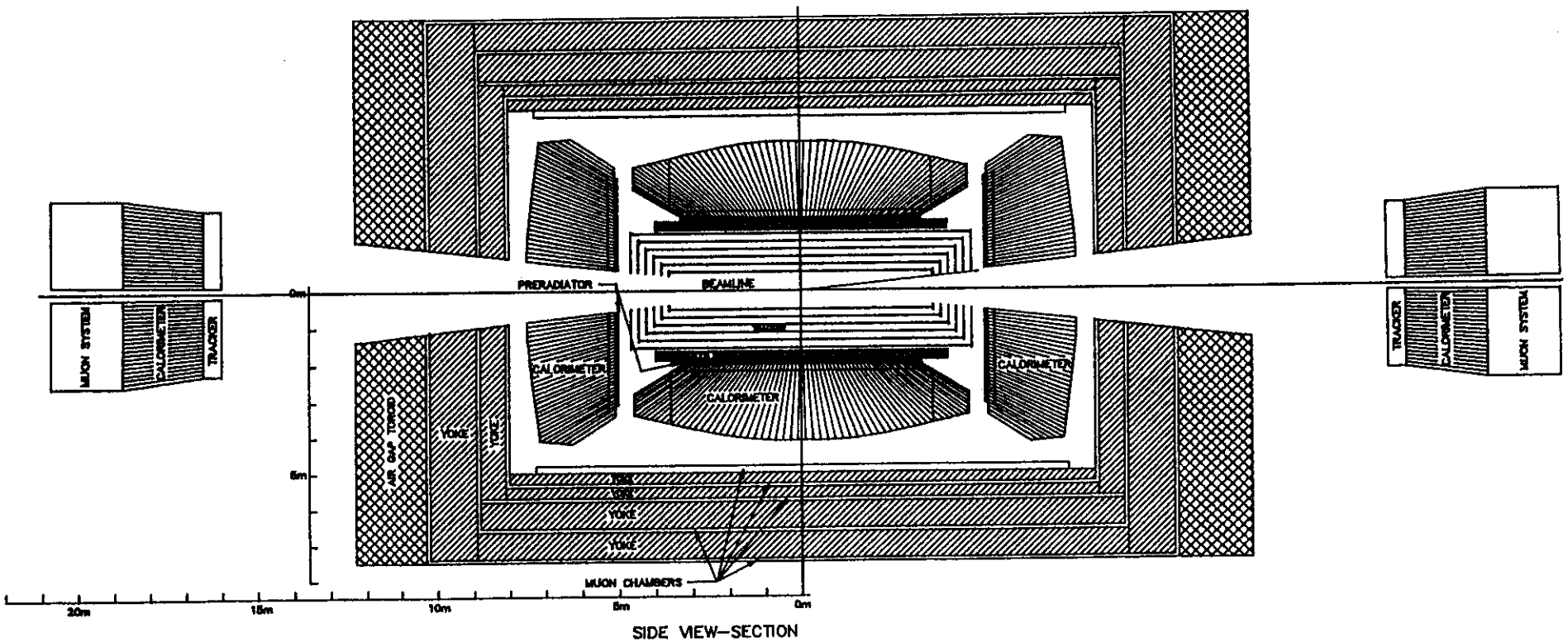

Fig. 8 Elevation cross section of the FAST detector.

This problem of the barrel-endcap transition is minimized in the two solutions sketched in Figs. 9 and 10. In the solution of Fig. 9, the front corner of each endcap module is set in a plane perpendicular to the pp beam direction. This solution is a Fresnel lens version of Fig. 2. The barrel is now extended to this plane, with whatever small gap is needed to bring out the wavelength shifting plates. With the current geometry of the FAST detector, this solution has a 9.3 m long barrel with the resulting increase in effective thickness of the plates to 2.6 at the most forward angles. There is also an abrupt transition to unit sampling in the nearby endcap for jets that span this region.

The third solution, shown in Fig. 10, minimizes the variation of sampling thickness with angle by making the endcap:barrel interface near a polar angle of 45°. The endcaps are cup-shaped objects and so much more complicated to build. This solution does, however, offer a smooth transition in the region of the barrel-endcap overlap.

These initial layouts are offered as examples of starting points for the overall mechanical design.

Structural Considerations

The final mechanical design must give due consideration to the following areas:

- Overall Mechanical Constraints
- Materials
- Manufacturability
- Environmental Effect
- Safety and Failure Modes
- Component Positioning
- Signal Routing
- Tolerances and Alignment

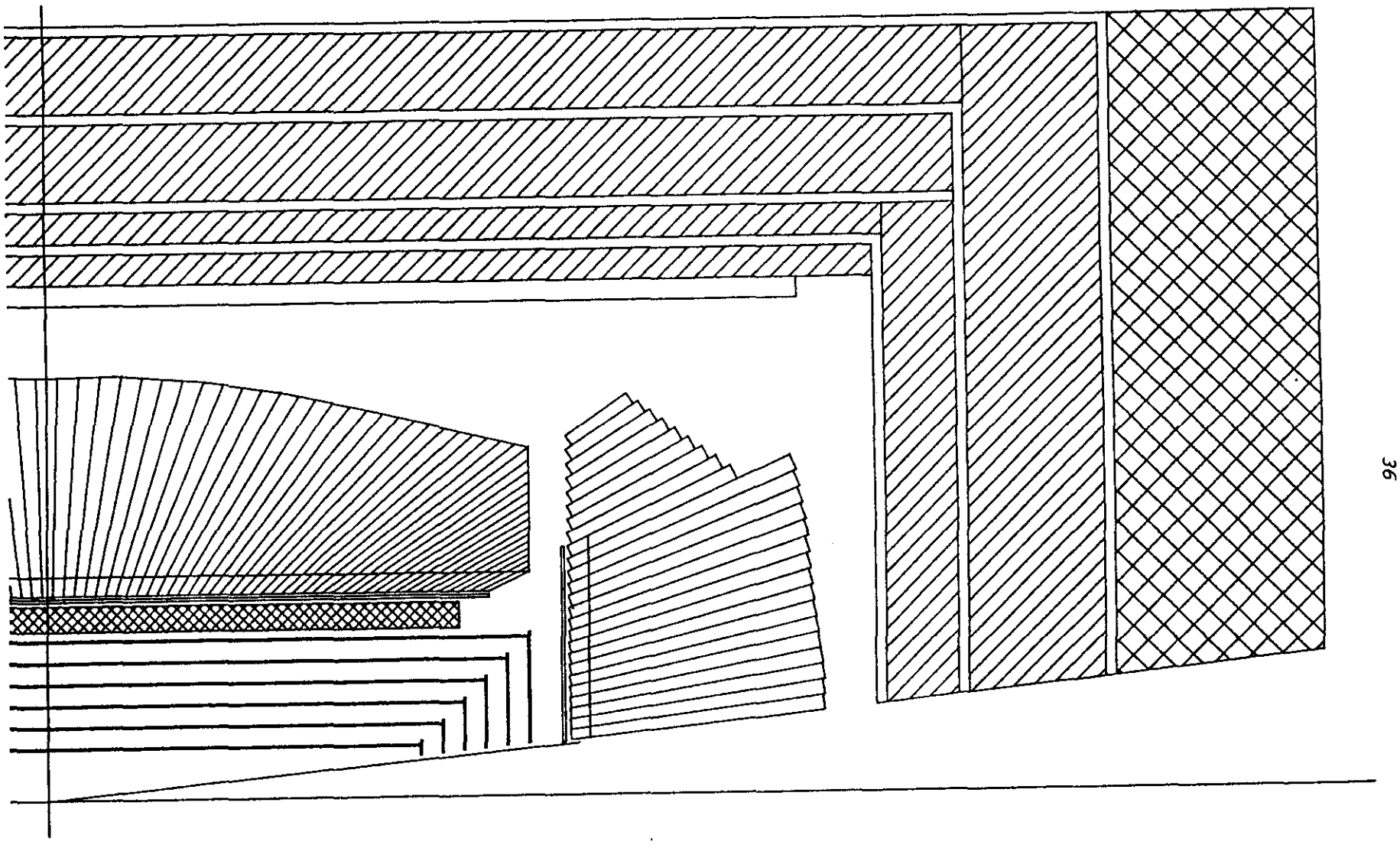

Fig. 9 First alternative calorimeter geometry.

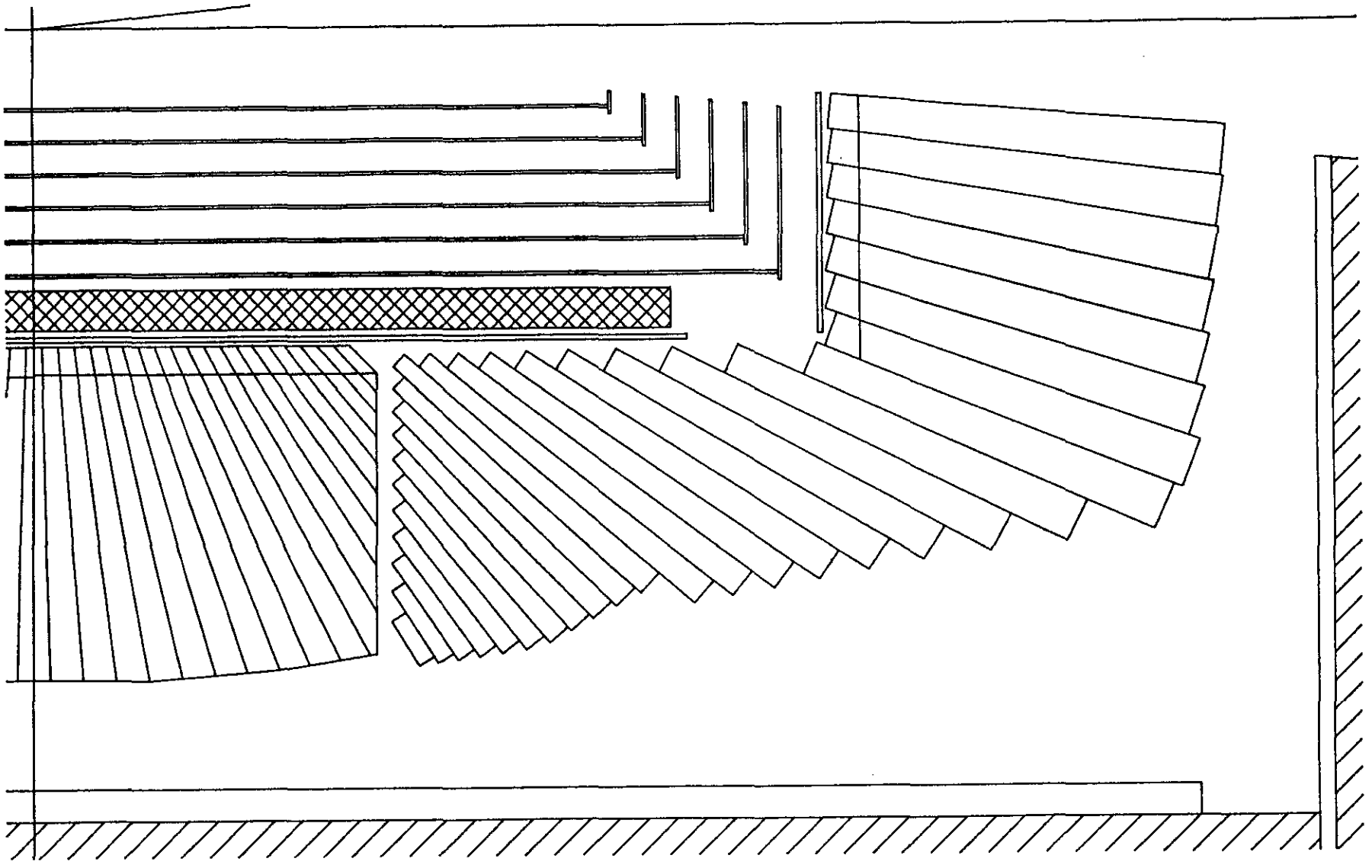

Fig. 10 Second alternative calorimeter module.

Each of these considerations is important in its own right, but the prime objective must be to find tradeoffs that lead to the best final calorimeter. The mechanical structure will take advantage of the latest technology, both in materials and fabrication procedures.

The design requires accurate manufacturing tolerances on the pieces, both in machining and assembly. It is also characterized by a difficult structural support requirement, particularly during assembly and mounting into the overall detector. In addition, the need for stability of the calorimeter over its projected operational life adds additional constraints considering the characteristic size of about 15 m and the weight of about 4,000 tons. The requirements of the other detector components such as the magnet coil and the tracker, which may be supported from it, must also be considered in the conceptual design.

In order to accommodate these mechanical and structural considerations without interfering with the physics measurements of the calorimeter, a minimum mass support structure is needed. A key issue is the ability of the calorimeter materials themselves to act as structural supports. This means that the lead or uranium plates must be constructed so that they provide a self-supporting structure. In the design shown in Fig. 4, each individual uranium plate would not be self-supporting because of the length. However, the stiffness of the full stack of more than 200 plates is very substantial. The major mechanical issue is the shear stress associated with the bending moment of the stack. A number of methods are normally used to provide shear support in stacked structures ranging from through- bolts and pins to banding straps and, indeed, friction (for a compressively loaded stack), as well as large-radial-depth thin-section shear panels.

Any intermittent structural component used to provide shear compensation requires penetration through the stack and results in an obstruction of the sensitive region and therefore should be avoided. Bands placed around the wedge structure eliminate the need to penetrate the stack. The forward calorimeter modules of the ZEUS detector are being built using such bands, but this is a substantially smaller device than the proposed SSC calorimeter.

Possibly the most practical method presently considered is that of a large depth thin section shear panel, discussed earlier and shown in Fig. 4. This method provides a uniform structure in depth and, if proper materials and mechanical constraints are utilized, a relatively stiff wedge section can be designed. The shear compensating panel would be attached, as shown in Fig. 5, to the adjacent wedge section to form a barrel wedge pair. This wedge pair could be assembled as individual modular sections for eventual delivery to the SSC site and assembly into the detector. A method of attaching wedge pairs together to form a cylindrical barrel is provided through these same shear panel supports to form an inner and outer support ring holding the calorimeter barrel together as a unit.

There are a number of areas which must be studied before the shear panel concept could be implemented. Possible materials must be reviewed as to maximum strength and minimum mass, while still maintaining long-term stability and manufacturability. The effect on the physics response of the calorimeter must also be considered. Methods for attaching the panels to the inner and outer structural support sections (ultimately the inner and outer barrel support rings) must be developed and analyzed. This system does, however, provide for a modular assembly method and should yield stability and tolerances over the life of the device within the acceptable range.

Systems Integration

Structural support is not the only consideration of the mechanical design of the calorimeter. Mounting and routing of the electronics and cooling lines must also be considered. All electronics (transducers, signal wiring, etc.) will be mounted on the outer diameter of the calorimeter and should be protected from damage during final assembly into the detector. Since any heat generation will be associated with the electronics, all the cooling tubes will be located in the outer region of the calorimeter and will be mounted from the support structure.

The interaction between the heat loads associated with the electronics and the mechanical structure must be considered. Heating of the outer

diameter of the calorimeter due to the electronic devices may cause movement of the overall structure resulting in alignment and stability problems during operation. Therefore, an external cooling source may be needed to handle the heat load rather than using the calorimeter structural mass as a heat sink.

Safety and failure modes of every component, as well as the overall calorimeter itself, must be addressed. Since the overall detector consists of many devices, only one of which is the calorimeter, failure of this device may also jeopardize the overall detector, resulting in lost running time and additional cost. To understand the impact of this on the design, the different concepts will be evaluated for their possible failure modes and resulting effects. After a final concept is chosen, a complete failure modes effects and criticality analysis (FMECA) will be performed. Also included in this work would be the mean-time-to-repair (MTTR) of various components and the availability of a component or subsystem referred to as the mean-time-between-failure (MTBF). When properly performed and factored into the final design, the FMECA will help to assure the reliability of the overall calorimeter system.

VI. CALORIMETER ELECTRONICS

Data Acquisition

A design study of the calorimeter data acquisition will be performed. Figure 11 shows a block diagram of the presently envisioned system. The high crossing rate of 62 MHz makes it very difficult to carry analog signals from the detector due to the stray reactances and timing problems. For this reason, we propose to store the phototube information in analog pipelines located on the detector. These analog pipelines could be implemented as switched-capacitor custom monolithic devices. Linear filters with an impulse response which smears the charge over several crossing periods, would probably precede the analog storage, and two channels with different gains will be needed for each phototube to achieve the necessary dynamic range. The experience of the ZEUS collaboration, who use this technique smearing the signal over about 500 nsec and sampling every 96 nsec, is that the time resolution is better than 1 nsec and a 14-bit dynamic range can be achieved. On receipt of a first-level global trigger, the relevant data in the analog pipeline would be transferred to a one-event analog buffer, allowing the pipeline to go live again. Data in the one-event buffers would then be multiplexed to on-board ADC's, digitized, buffered, and transferred from the detector via high-speed optical fiber links.

The interaction rates, the segmentation, and the radiation environment dictate that the front-end electronics of the calorimeter must be implemented in the form of highly-integrated, radhard or radiation-tolerant, VLSI custom monolithic devices. Important considerations are power dissipation, the choice of functions to be integrated on the front-end chips, and the cabling requirements. The high crossing rate can result in pileup confusion, and so an uncertainty about the integrity of the data. This problem must be solved by the hardware. Analog settling times become critical so that bringing analog data off the detector seems impractical. Analog storage must, therefore, be provided on the detector or the data must be immediately digitized. Locating the electronics on the detector also creates potential problems of power dissipation, which may lead to critical constraints on the design.

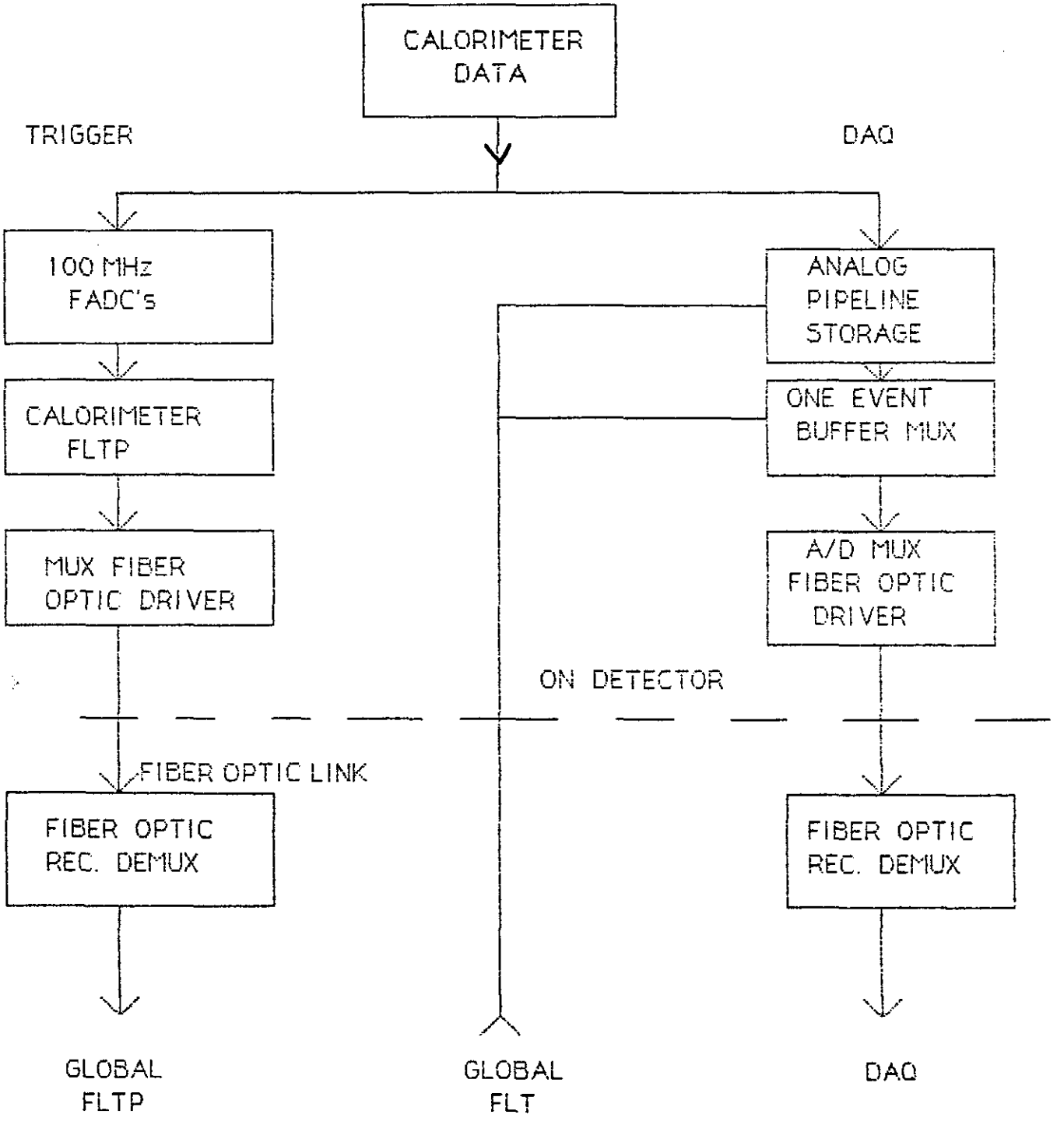

Fig. 11. PROPOSED ARCHITECTURE OF CALORIMETER ELECTRONICS

It is advantageous to minimize data transfer and to provide parallel data paths where possible, and accordingly, it may be useful to do some data compaction and processing on the detector immediately after digitization. For example, the ADC's could write into fast asynchronous FIFO's with DSP's or RISC-processors reading from the FIFO's which would compact and reduce the data prior to transfer from the detector. Such a scheme could yield a substantial reduction in the required hardware, together with a reduction in the time required for data transfer.

High speed fiber optics technology will be extremely important in implementing the data transfer from the detector. It may be possible to transfer triggered data only once from analog storage on the detector via high-speed optical links to a RISC-based computing farm with a processing power of ~ 10^5 VAX equivalents, and then to mass storage after processing and selection.

Testability of the data channels is essential and the hardware must also accommodate calibration and verification. This means that the system must provide the ability to inject test signals and/or vectors, and to execute diagnostics in order to pinpoint hardware problems. The ability of the data acquisition system to deal with corrupted data is also important. It may be useful to carry parity and to design the hardware to support other error-checking mechanisms.

Many of the signal-processing aspects of this design are already conceptually well-developed and some of the needed devices are available commercially. This is particularly the case for the photomultiplier tubes that are the essential first step in the data acquisition system. Attractive, but unproven, alternatives to the PMT exist. They will be studied as part of this proposal, as discussed in Appendix D.

The custom VLSI arrays and specialized processor devices that will ultimately be needed for the subsequent signal processing are not yet in existence. The <u>appropriate technology does exist</u> in large measure at present, and will be developed to the needed standards as part of this proposed work. A discussion of the fiber optics links and their radiation hardness are given

in Appendix E of this proposal.

Reliability is of paramount importance, and it is essential that the data acquisition electronics has a reasonable lifetime in the detector environment. Fortunately, because the electronics in a scintillation calorimeter can be located at the outside of the calorimeter, the radiation environment is considerably reduced, especially at forward pseudorapidities, as compared to technologies in which the electronics must be mounted inside the calorimeter.

Challenge of the Trigger

Selecting interesting events from the extraordinary rate of 40 TeV pp collisions that will be provided by the SSC is a major challenge. Since the first-level calorimeter trigger will be an essential ingredient in the overall trigger architecture of any detector, we consider a study of this trigger to be a significant part of our calorimeter proposal. In the past, most calorimeter designs have started with the basic mechanical elements, moved on to the readout, and finally considered the trigger. We feel that the difficulties of triggering and data acquisition at the SSC are significant enough that they must be considered in the initial design of the calorimeter. This means that not only is much detailed information needed about the requirements placed on the trigger and data acquisition system by the physics, but that in addition the anticipated response of the specific calorimeter design to these physics signals must be known. An essential first step in this process will be to simulate a sufficient number and variety of SSC events so that the patterns of energy distribution from jets, the isolation of the electrons, and the problems of event overlaps can be well understood in the context of various calorimeter design options.

A modest level of hardware development will also be performed to both provide confidence in the architecture which results from our conceptual designs and to understand its specific implementation. Most of the hardware design and engineering will be deferred until after the trigger concepts are firm and understood.

The trigger data follows a path parallel to the flow of the main data stream as seen in Fig. 11, but the trigger decision is usually made after access to only a subset of the total data. This subset may result from things like ganging the input signals, which decreases the granularity, or from the reduced resolution of the data that is available on the trigger time scale.

The design and construction of a trigger for a hadron collider detector has been addressed by several operating collider collaborations (UA1, UA2, and CDF), and we shall draw on their experiences in assessing the problems presented by the SSC environment. At present, the above detectors do not require a pipelined trigger or data acquisition system. However, such a system is required at the HERA storage ring since the beam crossing time there is 96 nsec and such a system has been designed for the ZEUS experiment. A potential SSC trigger and data acquisition architecture based on this design is described in Appendix F, where the issues and areas of concern are discussed in detail.

Processor for the First-Level Calorimeter Trigger

The signals in the trigger path, shown in the left half of Fig. 11, are immediately digitized, stored in a digital pipeline, and then processed. In the present concept, the trigger processor operates on these data for about 2 μs to yield the following types of information:

- The number and regional location of isolated electromagnetic energy clusters.
- The number and regional location of isolated minimum-ionizing energy depositions.
- The number and regional location of isolated jets.
- The transverse energy deposited in the calorimeter.
- The missing transverse energy of the triggered event.

A calorimeter trigger processing system will be designed to furnish the above information, taking cognizance of the results of the simulations. This development study will focus on architecture, reliability, minimization of data transfer, optimal realization of algorithms and fault tolerance. A major question to be investigated is whether the processor must be located on the detector or if it can reside in the electronics house. Since only one module of the calorimeter will be completely equipped and tested, only a fraction of the trigger hardware will be built. All of the processor algorithms will be defined and implemented in software.

Figure 12 gives a diagram of one possible architecture of the trigger processor. To emphasize redundancy and parallelism, the trigger processor would consist of parallel identical channels of logic, which could be implemented in advanced CMOS technology. The digitized FADC data would be routed sequentially to contiguous channels of trigger logic, consisting of ranks of logic with all signals latched between ranks. If there are ten channels, for example, the data need then only be clocked from one set of latches to the next at one-tenth of the crossing frequency. This allows time for the data to propagate through the ranks of logic and become valid before being latched for the next rank.

Data that has been processed is collected sequentially from the channels of CMOS logic and transferred to the fiber optic multiplexer/driver for transfer from the detector to the global first-level trigger processor. In fact, all transfers of calorimeter data to or from the detector would be accomplished via fast fiber optics at data rates on the order of 10 Gb/sec. Our study will include conceptual development and feasibility analysis of these fast fiber optics links.

It is essential that the architectures and the hardware design permit the injection of Monte Carlo data and test vectors, and that the execution of comprehensive diagnostic codes be possible. The study will focus on these testability requirements which will allow efficient fault analysis and debugging. Since the high crossing rate may result in pileup and corruption of crossing data, it is necessary that the trigger processor be tolerant of such problems.

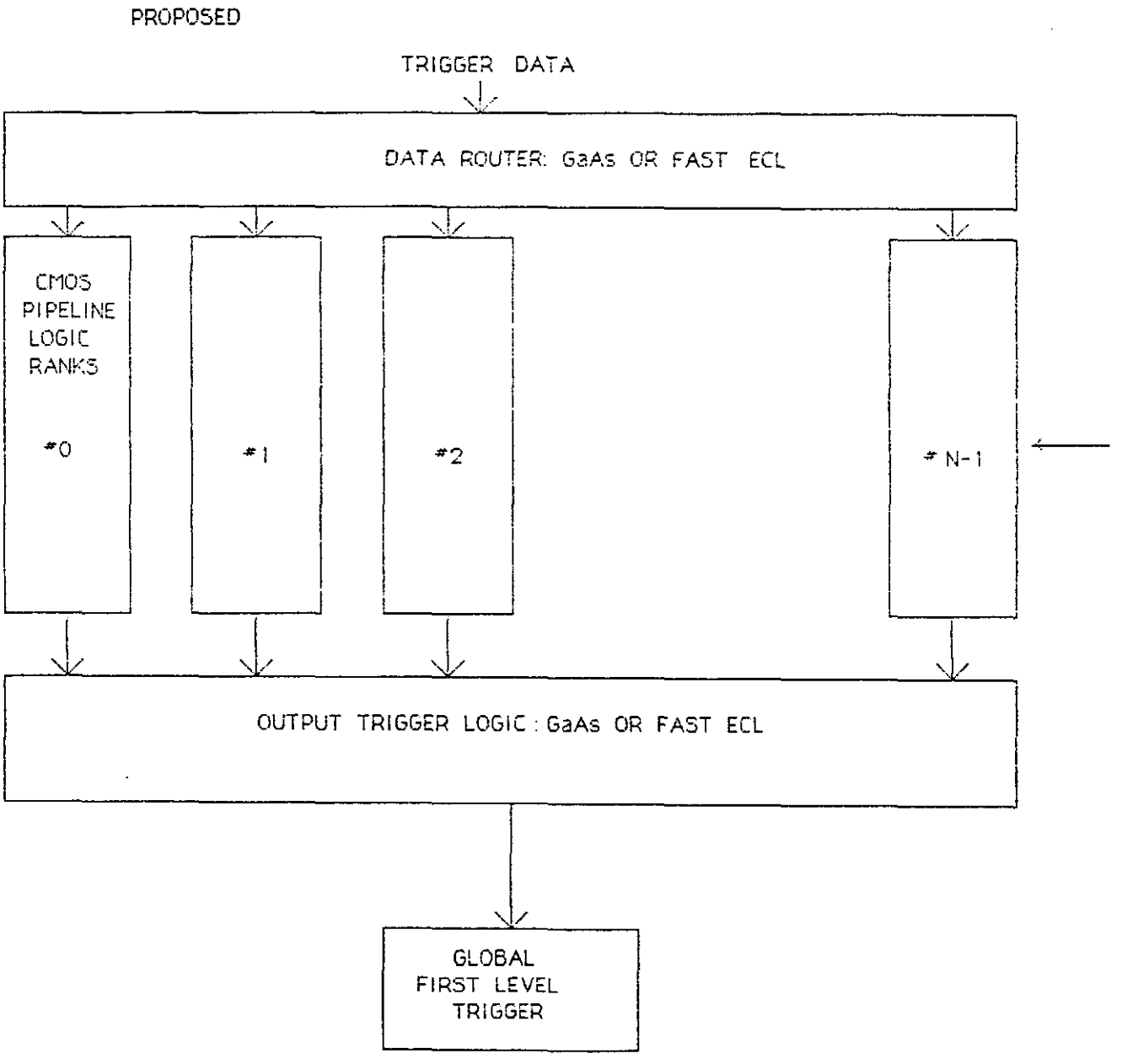

Fig. 12. PROPOSED FIRST LEVEL TRIGGER PROCESSOR: ARCHITECTURE

In a complete SSC detector, the information from the calorimeter trigger processor will be combined with trigger data from the other detector components in a first-level trigger processor which then issues a final trigger decision.

VII. STATEMENT OF WORK

As we have discussed, the objective of this subsystem proposal is to produce an optimized design for a calorimeter to be used with a general-purpose solenoidal detector at the SSC. At the end of the work, the parameters of the calorimeter will be defined, all of the technical issues will have been addressed, and the system will be understood at the level where detailed engineering can be done preparatory to fabrication. These issues require the optimization of the mechanical and optical design in the context of benchmark physics processes, while simultaneously establishing viable radiation-tolerant technologies for the initial detector components.

It is our belief that if the overall detector is to be ready to study the first SSC collisions, then the work outlined in this subsystem proposal must begin soon and proceed rapidly. We are ready to start work.

An overview of the scope of work to be carried out in this subsystem proposal is shown in Fig. 13. We now list the tasks that must be done to achieve the aims of this proposal and give the specific responsibilities of the proposing groups.

Task Group 1. Simulation Studies

Optimization of the design of the detector will rely extensively on simulation studies as the results from prototype test beam measurements will not be available until late in the work sequence. In addition, the prototype program can only address a limited range of questions. For example, simulation is the primary means by which the effect of the overall mechanical design on the physics capability of the detector can be assessed. The work to be completed in the first year of this proposal will specify the design of the overall calorimeter.

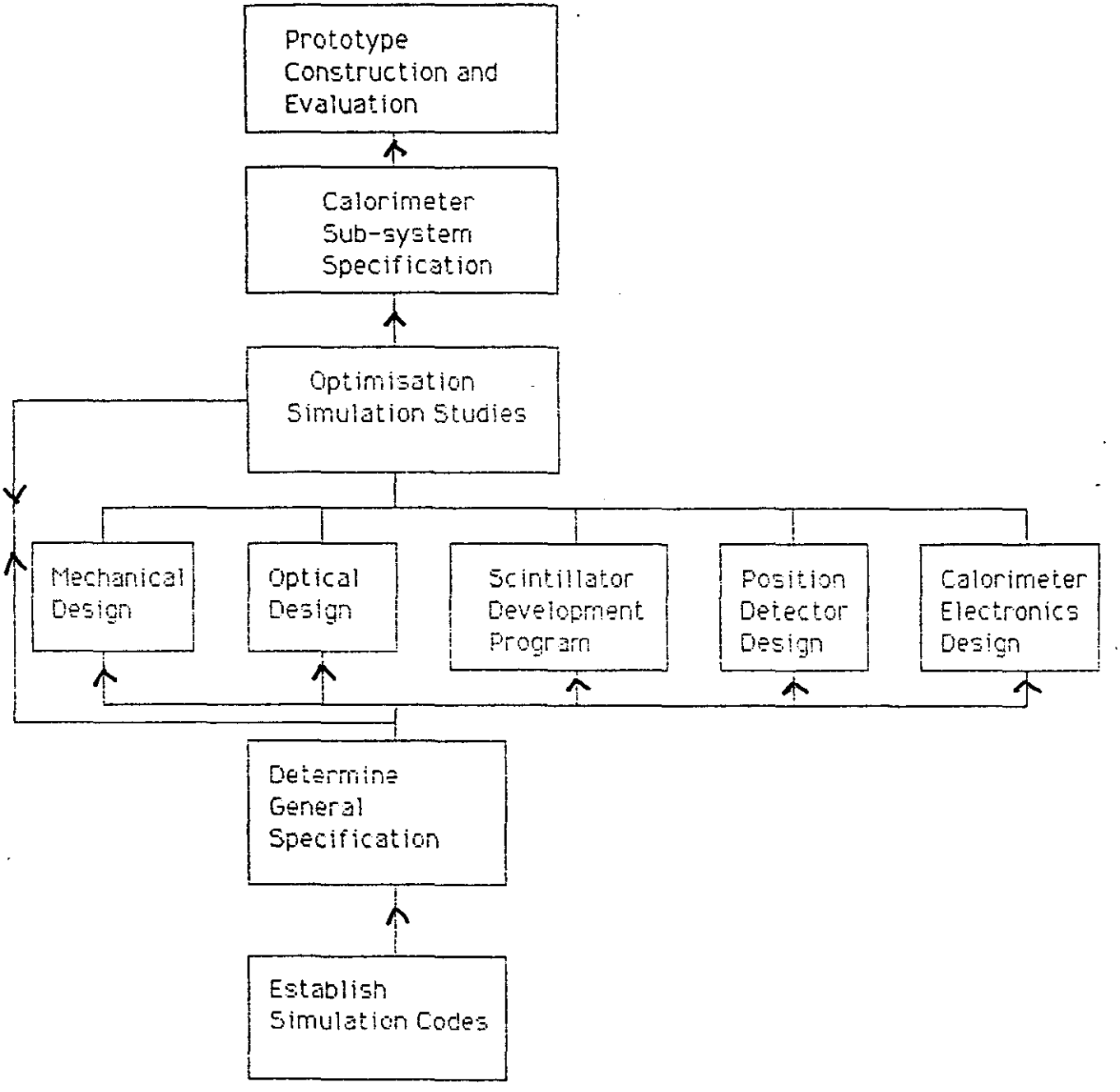

Fig. 13. Overview of the scope of work.

Task 1.1 General Calorimeter Specification

Key physics processes will be used to establish benchmarks to measure the detector performance. The correctness of the physics generators will be validated and their results used to determine the general calorimeter specification: energy resolution, granularity, and hermeticity.

Task 1.2 Unit Cell

A calorimeter simulation program using an integrated package from both the CALOR89 and GEANT3 codes will be established. These programs will provide full shower simulation, including correct simulation of the compensation mechanisms in lead and uranium, which is a key issue for the choice of radiator. Having verified the functional operation of the code, the package will be used to evaluate the optimal unit cell and associated physical tolerances consistent with the general specification for the two candidate radiator materials. Questions such as the use of a mixed radiator or grading the radiator thickness with depth will also be investigated.

Task 1.3 Optimization of Mechanical Design

A major simulation effort will be needed during the design sequence to evaluate and thereby optimize the impact of the mechanical design decisions on the measurement of the benchmark physics processes. In addition to considering the overall geometrical properties of the detector, this study will also address the issue of the type of material to be used and the location of the structural supports.

Task 1.4 Optimization of Optical Design

Simulation studies will be undertaken to evaluate the effect of the tower response map on the measurements of the physics processes. These studies will include an evaluation of time-dependent and position-sensitive effects such as could arise from aging and/or radiation

damage. The results will be used to quantify the associated tolerances.

Task 1.5

Subsequent to the identification of the optimal detector design, additional simulation studies will be undertaken to allow comparison with test-beam data and to refine the codes required to understand the physics response of the complete detector.

These studies, which set the overall design of the calorimeter, will be evaluated by the authors as a whole. Most of these simulations will be undertaken by appropriate groups at Argonne National Laboratory, the University of Mississippi, Oak Ridge National Laboratory, and Virginia Polytechnic Institute.

Task Group 2. Mechanical Design

This is a 24-month program to perform the preliminary mechanical design and analysis of the calorimeter. Upon completion of this program, there will be available concept drawings, estimated costs, and schedule for the procurement, fabrication, assembly and testing of an SSC calorimeter.

The mechanical design must meet certain basic criteria:

- All mechanical support components within the calorimeter should be of low Z material.

- The space occupied by the necessary structure to support the calorimeter will be minimized.

- Appropriate safety factors will be used in the design to ensure that the required specifications will be met.

- The support structures needed for the other detector components, which will increase the requirement for structural loading on the calorimeter,

will also be considered.

The program is divided into four specific areas of performance comprising eight tasks. The four performance areas are:

- Mechanical Design/Analysis
- Material Science
- Thermal Management
- Manufacturability

Task 2.1. Calorimeter Definition and Specification

This task will completely specify the functional design requirements that the calorimeter must have in order to meet the physics requirements. Physical constraints such as size, weight, length, and geometry will be identified, as well as electrical leads and cooling requirements. This initial effort lasts most of the first year of the program, although the effort will continue in order to incorporate modifications as the concepts mature.

Task 2.2 Material Evaluation

The properties of the materials that are to be used for the support structures will be specified in this task. Candidate materials will be evaluated based on their radiation length, susceptibility to radiation damage, mechanical strength, and ease of fabrication. The effects of structural attachments and the suitability of high strength composite materials will be evaluated. Based on the evaluation process, subscale mechanical prototypes to test the fabrication and strength of the composite structural pieces will be proposed and built.

A specific and important part of this task is to investigate procurement and fabrication options for producing the depleted uranium plates at minimum cost. This work includes investigation of options for covering the uranium by techniques such as plasma arc deposition, in

addition to a study of low-cost ways of wrapping the uranium plates with steel. An engineering investigation of lead as an absorber material is also included in this task.

Task 2.3 Mechanical Design and Analysis

In this task the preliminary design of the calorimeter assembly will be performed. Various concepts will be reviewed and evaluated, and the most promising design will be chosen from the viewpoint of an overall calorimeter system. The final selected concept will be analyzed for structural support to ensure sufficient stability and rigidity such that alignment requirements can be maintained over the design life of the device. All routing and connections of power, cooling and instrumentation cables and hoses will be conceptualized. In addition to the design and analysis work, general requirements for assembly and alignment will be specified during this task.

Task 2.4 Fabrication Drawings and Interfaces

This task consists of preparing layout drawings of the various concepts proposed and studied in Task 2.3. Concept drawings of the selected calorimeter configuration will be prepared in sufficient detail to obtain the information on the fabrication costs and schedule. Assembly drawings will be developed as necessary to assist in the fabrication and assembly procedures, as well as for the interfaces with adjacent substructures.

Three dimensional solid modeling will be utilized as needed in the design process to verify spatial relationships between components and to assure proper assembly and system integration.

Task 2.5 Fabrication and Assembly Procedures

The purpose of this task is to specify in sufficient detail the fabrication processes and assembly procedures required of the concept selected. These procedures will include such items as:

- Scintillator Plate Mounting Procedure
- Structural Support Fabrication Method
- Special Tooling
- QA/AC Testing
- Modular Assembly Sequence
- Electrical Cable Routing Procedure
- Cooling Routing Procedures

These procedures will be sufficiently detailed that cost estimates for the construction of and assembly of the calorimeter will be available.

Task 2.6 Thermal Management

Thermal management will consider various methods for removing the heat generated within the calorimeter. All known sources of heat both internal and external to the calorimeter will be determined and evaluated. A scheme will be proposed for maintaining the calorimeter modules at a reasonable operating temperature. Upon completion of this task, a listing of the cooling system equipment will be identified.

Task 2.7. System Integration

In this task the integration of the calorimeter with the surrounding equipment in the overall SSC detector system will be investigated. Included in this effort will be the assembly and disassembly of the calorimeter within the system as well as the mounting requirement and constraints of the device. In addition, a survey of the known external forces and loading conditions affecting the calorimeter will be prepared.

Task 2.8. Subsystem Cost/Schedule

This task will estimate the cost and schedule for the overall fabrication and delivery of a completed device to the SSC detector

location. Included in this task will be the cost and schedule for the following items.

- Materials Procurement
- Component Fabrication
- Module Assembly
- Module QA/QC Testing
- Module Shipping to SSC Site
- System Assembly at Site
- System Testing
- System Installation

This effort will require input from all proponents in order to establish a reasonable and accurate cost and schedule. The mechanical tasks listed above will be undertaken by the Westinghouse Science and Technology Center, in collaboration with Argonne National Laboratory and the University of Wisconsin. We will work in close collaboration with Oak Ridge National Laboratory on uranium procurement issues. The study of the uranium fabrication and cladding will be done by the Wisconsin group in collaboration with Argonne National Laboratory and Manufacturing Sciences Corporation.

Task Group 3. Scintillator Development Program

The development of a radiation-hard scintillator that has an appropriate emission spectrum is a crucial part of this proposal. We expect to understand the basic issues during the first year of the program.

Task 3.1 Manufacture of Scintillator

Sytyrene-based scintillator tiles will be made using Bicron's present technology. Sufficient scintillator would be produced for two complete tower modules of the test calorimeter listed in Task 7.1. The first set would be of a scintillator that emits in the blue and is known to be rad-hard to about 5 Mrad. The second set would be of the green emitter that can withstand 10 Mrads. The tile edges would be polished as required.

Task 3.2 Fluor Research

Fluor research will be done on variants of MOPOM in an attempt to increasing their Stokes loss, solubility, and intrinsic radiation-hardness. Results of the parallel fluor development using pyrazolines that is being done under Bicron's SBIR Phase II program will be made available to this project.

Task 3.3 Copolymer Research

Research will be done on copolymers of polystyrene to develop intrinsic radiation-hard plastics. The other polymer components may include siloxanes and polyethylene-type monomers. Ease of scale-up to large scale manufacture will be a prime factor in the selection. Prototype tiles will be fabricated to demonstrate feasibility of large-scale production.

Task 3.4 Fabrication of WLS Bars

The WLS bars suitable for equipping the complete tower assemblies listed in Task 7.1 will be fabricated. The bars will be 2 to 3 mm thick single castings, combining regions of pure light guide with regions having a green WLS dye. The development work will cover fabrication method, the selection, and optimization of dye concentration, and the optimization of the scintillation quencher.

Task 3.5 Radiation Damage Testing

Radiation damage testing will be carried out in connection with the above items. For initial qualification, tests will be done with gamma or electron sources at high rates of at least 80 krad/hour using initially small discs 15 mm dia. × 10 mm thick. The tests will include light transmission, light output, and recovery in similar format to work performed by Bicron and the University of Florida over the past two years. Efforts will also be made to run tests at lower exposure rates corresponding to annual exposures of 10 to 100 Mrads. Longer pieces of

scintillator will also be irradiated in order to check for the presence of more than one attenuation length of the light.

Task 3.6 Manufacturing Techniques

This task is aimed at developing low cost production methods for the scintillator and wavelength shifter, either by scaling up the cell casting manufacturing process that will be used for the prototype tiles or by use of an extrusion process. Edge treatment of the scintillator tiles and possible optical bonding techniques for the wavelength shifter-lightguide assembly will be studied.

All of the scintillator development work will be the responsibility of the Bicron Corporation of Newbury, Ohio. Bicron personnel will either directly perform the work, will direct subcontractors, or coordinate the efforts of members of the collaboration in carrying out specific aspects of the work. Additional radiation damage testing will be carried out using facilities at Florida State University and Argonne National Laboratory. The results of these tests on both scintillator and wavelength shifter will be evaluated at currently operating facilities at Florida State University and Louisiana State University.

Task Group 4. Optical System

A known area of concern of our chosen design is to ensure an adequate efficiency in the coupling of the scintillation light via a waveshifter plate and lightguide to the photon detector so that photon statistics will not dominate the resolution.

Task 4.1 Optimize the Optical Structure

Determine the structure of filters and reflectors required to obtain the necessary detector unformity consistent with the chosen optical geometry. Optimize this structure to maximize the light yield.

Task 4.2. Evaluate Solid State Photon Detectors

Several solid-state devices are potential candidates for light detection in addition to a conventional photomultiplier tube and base. In addition to ensuring a viable detection system, it is also essential to match the spectral response of the solid-state detector to the light emitted from the chosen waveshifter. Current technology will be evaluated in the first year of this proposal.

Task 4.3 Study of Conventional PMT Readout Option

The options for conventional PMT readout via a HV base and controller will be surveyed. The gain stability and linearity of such a system will be measured to determine if this technology is consistent with the required objectives.

Task 4.4 Measure Light Detection Efficiency

The system efficiency of the optical design proposed for the calorimeter will be measured (scintillator, waveshifter, lightguide, and photon detector).

Task 4.5 Automated Scintillator Handling

The proposed calorimeter contains over three million scintillator tiles. An automated system is needed for cutting, wrapping, and measuring the uniformity and magnitude of the light output for each tile. A conceptual design for such a system will be developed.

Groups at Louisiana State University and Argonne National Laboratory will conduct a program to optimize the optical design using techniques similar to those used by the ZEUS collaboration. The group from Virginia Polytechnic Institute will evaluate potential photon detectors and study the readout system.

Task Group 5. Position Measuring System

Several technologies are generally consistent with the requirements anticipated for this detector. The tasks to be carried out include:

Task 5.1 Evaluate Technical Options

Evaluate technical options: gas MWPC, silicon pads; scintillating fibers, and scintillating strips.

Task 5.2 Determine Optimal Placement and Granularity

Determine using simulation studies, the optimal placement, and segmentation for use of the device in electron/pion separation and for the measurements of neutral energy flow in jets.

Task 5.3 Test Beam Measurements

Evaluate the design in a test beam and verify the simulation results.

Task 5.4 Prototype Chamber

Formulate design plans for a position detector to be used in the full-scale prototype calorimeter.

Groups at Argonne National Laboratory and the University of Wisconsin will undertake a program to evaluate these options and identify the optimal location of the position detector.

Task Group 6. Electronics

The design of the calorimeter data acquisition and trigger system is intimately tied to that of the calorimeter through things like channel count, the geometrical configuration, the electronic architecture, and expected data rates. We will evaluate those issues that are pertinent to the operation of the calorimeter itself as a physics detector. The tasks that must be

addressed are listed below:

Task 6.1 Response of the Calorimeter to the Physics Signals

Prior to embarking on a hardware study, it is essential to understand the energy deposition profiles of important signal and background processes. Event simulation studies will be used to evaluate the trigger rates and occupation densities as a function of trigger cell granularity and cell thresholds. The physics biases implicit in the choice of the cell structure and the reconstruction algorithms will be evaluated. The data occupation densities will be studied as a function of the physics process and both electronic and geographical detector topologies. These studies will be used to identify and minimize bottlenecks in the data paths associated with particular architectures and to evaluate the benefits to be derived from data compaction.

Task 6.2 Trigger Architecture

A conceptual development of the trigger architecture will be done with emphasis on redundancy and parallelism. The algorithms that must be implemented in the trigger processor will be developed.

Task 6.3 Trigger Electronics

A conceptual development of the trigger processor hardware will be done, together with a modest hardware realization program to provide support for the hardware phases of the calorimeter study.

Task 6.4 Data Acquisition System

A conceptual design study of the calorimeter data acquisition system will be done. The use of existing switched capacitor storage in the analog pipeline will be evaluated. The objective is to achieve 13 to 14-bit dynamic range when sampling at 16 nsec intervals, and those aspects of this technology that limit this goal will be identified and quantified. Use of improved CMOS devices on this design will be considered.

In addition, a conceptual design of an appropriate pulse shaper, will be formulated and the possibility of packaging it within the switched capacitor chip encapsulation investigated. The time required to transfer the relevant data to a one-event analog buffer which is performed on receipt of a first-level trigger will also be studied. Modest hardware realizations will be constructed as necessary to evaluate the design conclusions.

Task 6.5 Fiber Optic Data Transfer

A feasibility study will be carried out to determine the validity of using a high-speed optical fiber data link between the calorimeter front-end electronics and the global data-handling system.

Task 6.6 Data Compaction

This task covers the conceptual development of the electronics which digitizes and compacts the multiplexed analog data from the one event buffer on receipt of a first level trigger.

Task 6.7 Radiation Hardness

It is necessary that the radiation tolerance of the electronics be understood during the study phase of this work. Appropriate design effort and damage testing will be dedicated to this point. The analog pipeline storage medium is a particularly radiation-sensitive section of the electronics, and whether or not analog storage can be used will probably be determined ultimately by the radiation tolerance of relevant devices. This study will include a section which treats the radiation environment, the radiation tolerance and/or hardness of the electronics, and includes a damage-testing program.

Task 6.8 Study of Reliability and Thermal Load

Reliability of the electronic hardware is important and we must have confidence of a reasonable lifetime in the detector environment. An

analysis will be done of the power dissipation and heat transfer related to the electronics.

Task 6.9 Hardware Realization

In this task, sufficient chips will be produced so that the functions of the critical components can be tested. This specifically includes the front-end pulse shapers, and the analog storage chips. Sufficient channels of the front-end and the fiber optics data link will be constructed to equip the full-scale prototype listed under Task 7.4.

These tasks will be performed by several groups. In particular, the response of the calorimeter to the physics signals will be studied by personnel from Argonne, Iowa State University, and Wisconsin in collaboration with the simulation group. The architecture of the data acquisition system, as well as the radiation hardness of the components, will be the responsibility of the Argonne group. The specific realization of the data acquisition system and the fiber optics data links will be done by the Westinghouse Science and Technology Center with help from Argonne and the University of Wisconsin. The overall design of the trigger, including the specific algorithms to be used, will be done by Argonne and the University of Wisconsin; the design and fabrication of the hardware will be done by Wisconsin. The study of the data compaction and heatloads will be done by the Iowa group.

Task Group 7. Construction and Evaluation of Prototype Modules

In addition to small mechanical, optical, and electrical prototypes required to evaluate various options for the detector design, it is planned to construct several small calorimeters to check things like the optical response to minimum-ionzing particles and the choice of the unit cell. Two full-scale mechanical modules, one for the barrel calorimeter and one for the endcap calorimeter, will be built. One of these will be fully equipped with scintillator and a readout system and checked out in a particle beam.

Task 7.1 Model Calorimeter

A calorimeter cell will be built using existing plates of uranium 5 cm × 25 cm. The model will be equipped initially with the rad-hard scintillators that are currently available and read out by a suitable combination of wavelength shifters and PMT's. Cosmic ray particles traversing the cell will allow measurements of important parameters such as the light yield for minimum-ionizing particles traversing the cell. This test setup will also be used to check new scintillator and wavelength-shifter materials as they become available.

Task 7.2 Mechanical Models

In the second year of this program, two full-scale modules will be stacked using steel plates in order to obtain experience with the fabrication techniques that will be used in building the final calorimeter. By loading with suitable lead sheets, the mechanical integrity of the design under the loading of the final uranium or lead radiator sheets will be checked.

Task 7.3 Models to check the Unit Cell Structure

The specification of the unit cell will be chosen following the simulation studies and starting from the experience of previous detector collaborations. The choice must be validated experimentally. For example, if the simulation studies show that a radiator with thickness graded in depth could give the needed hadronic energy resolution irrespective of longitudinal shower fluctuations, then it will be essential to check this prediction by test beam measurements. For this part of the work, several small modules are needed, which together are large enough to cover the lateral spread of a high energy hadronic shower. The response of adjacent modules will also be measured as an electron beam is swept over the junction between them.

Task 7.4 Fully-Equipped Prototype

One of the full-scale mechanical models to be built under Task 7.2, will be equipped in the third year with the final radiator plates, the scintillator, the wavelength shifter plates, and the readout system, so that a full-scale test can be made to validate the final design.

Task 7.5 Test Beam Work

This task covers the work associated with measuring the response of prototype modules to incident charged particles. Any costs charged by the host laboratory will be included here. Beams providing well-identified electrons and pions with momenta between 2 and 200 GeV will be required in order to check the uniformity and linearity of response, as well as the energy resolution of the electromagnetic part of the calorimeter modules. Prior to this, initial tests of module response will be carried out using radioactive sources and cosmic rays. The test calorimeter will be initially set up at Argonne National Laboratory.

The mechanical models will be specified, built, and tested by Argonne National Laboratory and Westinghouse Science and Technology Center. The fully-equipped calorimeter modules, needed under Tasks 7.3 and 7.4, will be built at Argonne in a collaboration with the University groups. The test beam validation will be the responsibility of the Academic Institutions participating in the proposal.

VIII. SCHEDULE AND COSTS

In this section, we present the schedule for the proposed work in the form of bar and logic charts. In addition to the anticipated duration of each task, the logical connections between the functions carried out in each task are also shown in the diagrams of Fig. 14. Preconditions for the commencement of one task on the results from a second task are indicated by a start-to-start or finish-to-start line between the tasks. A finish-to-finish line indicates that the final outcome of both tasks depends on the completion of them both. As expected, none of the tasks in our proposed scope of work are wholly independent and several have potentially significant effects on the overall plan. For example, the establishment of simulation codes must precede commencement of the mechanical design as they are required for its optimization; the mechanical design subtasks also link to the optical system tasks, to the electronics, and indirectly to the scintillator development program; and finally all design work must be completed prior to fabrication of the prototype modules.

The schedule presented in Fig. 14 assumes no restrictions on funding or on the availability of test beams. It also assumes a timely achievement of the goals of each task. The duration of each task has been conservatively estimated, but experience shows that the uncertainties inherent in early planning of this type are such that the final time period required exceeds that initially allocated. With this proviso in mind, the schedule shows the construction of the fully-equipped prototype (Task 7.4) starting in the spring of 1992.

The costs associated with different task groups broken down by fiscal year and project calendar year for the period of this proposal are shown in Tables I and II. A more detailed breakdown of the allocation of resources is given in Appendix G. It should be noted that technical services for the scintillator development program are being provided by the Bicron Corporation at no cost to this project.

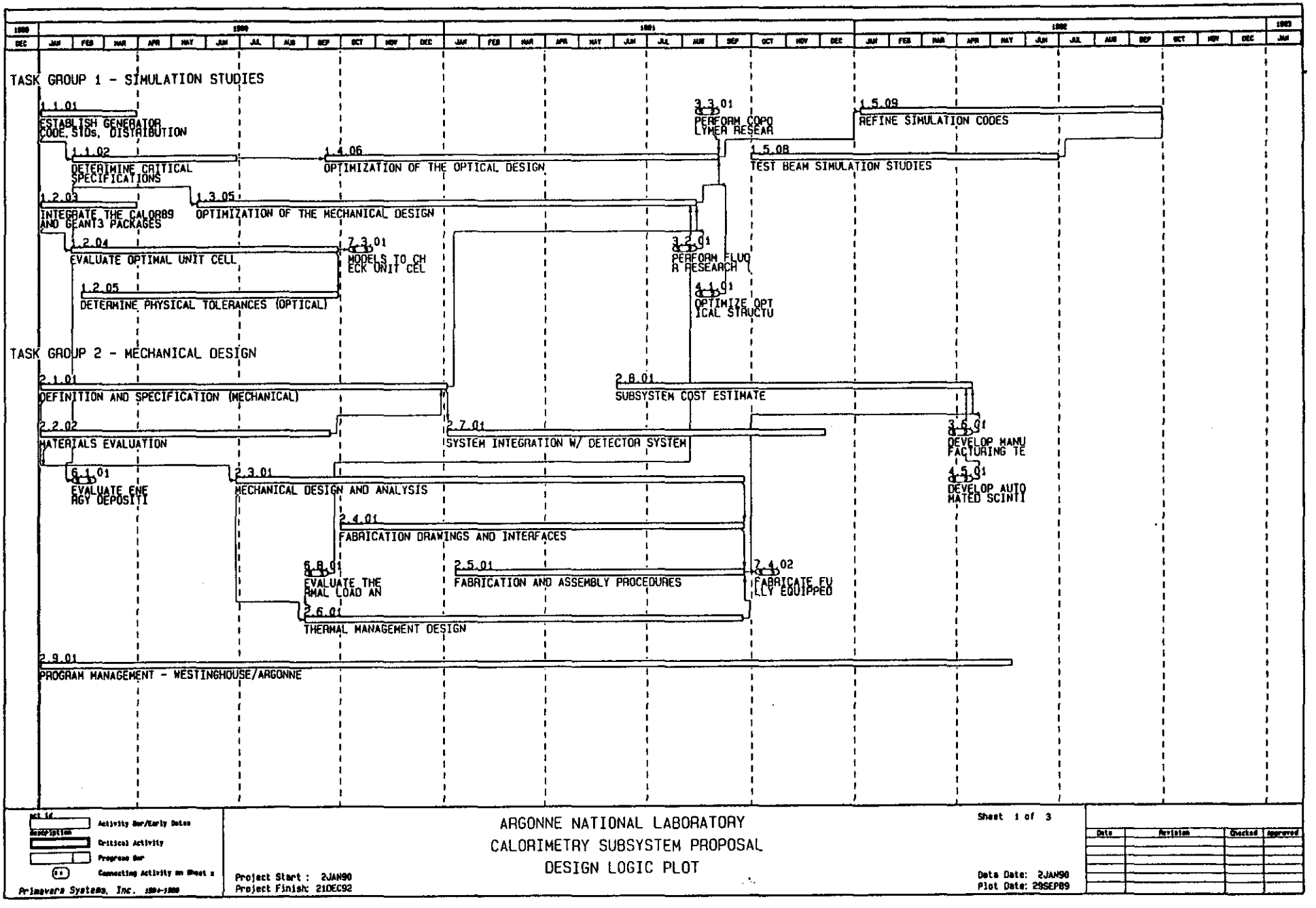
TASK GROUP 1 - SIMULATION STUDIES
1.1.01
ESTABLISH GENERATOR CODE, STDs, DISTRIBUTION
1.1.02
DETERMINE CRITICAL SPECIFICATIONS
1.4.06
OPTIMIZATION OF THE OPTICAL DESIGN
3.3.01
PERFORM COPO LYMER RESEAR
1.5.09
REFINE SIMULATION CODES
1.5.08
TEST BEAM SIMULATION STUDIES
1.2.03
INTEGRATE THE CALOR89 AND GEANT3 PACKAGES
1.3.05
OPTIMIZATION OF THE MECHANICAL DESIGN
1.2.04
EVALUATE OPTIMAL UNIT CELL
7.3.01
MODELS TO CH ECK UNIT CEL
3.2.01
PERFORM FLUO R RESEARCH
1.2.05
DETERMINE PHYSICAL TOLERANCES (OPTICAL)
4.1.01
OPTIMIZE OPT ICAL STRUCTU
TASK GROUP 2 - MECHANICAL DESIGN
2.1.01
DEFINITION AND SPECIFICATION (MECHANICAL)
2.8.01
SUBSYSTEM COST ESTIMATE
2.2.02
MATERIALS EVALUATION
2.7.01
SYSTEM INTEGRATION W/ DETECTOR SYSTEM
3.6.01
DEVELOP MANU FACTURING TE
6.1.01
EVALUATE ENE RGY DEPOSITI
2.3.01
MECHANICAL DESIGN AND ANALYSIS
4.5.01
DEVELOP AUTO MATED SCINTI
2.4.01
FABRICATION DRAWINGS AND INTERFACES
6.8.01
EVALUATE THE RMAL LOAD AN
2.5.01
FABRICATION AND ASSEMBLY PROCEDURES
7.4.02
FABRICATE FU LLY EQUIPPED
2.6.01
THERMAL MANAGEMENT DESIGN
2.9.01
PROGRAM MANAGEMENT - WESTINGHOUSE/ARGONNE
Activity Bar/Early Dates
Critical Activity
Progress Bar
Connecting Activity on Sheet x
Primavera Systems, Inc.
ARGONNE NATIONAL LABORATORY
CALORIMETRY SUBSYSTEM PROPOSAL
DESIGN LOGIC PLOT
Sheet 1 of 3
Project Start : 2JAN90
Project Finish: 21DEC92
Data Date: 2JAN90
Plot Date: 29SEP89
Date
Revision
Checked
Approved

Fig. 14(a)

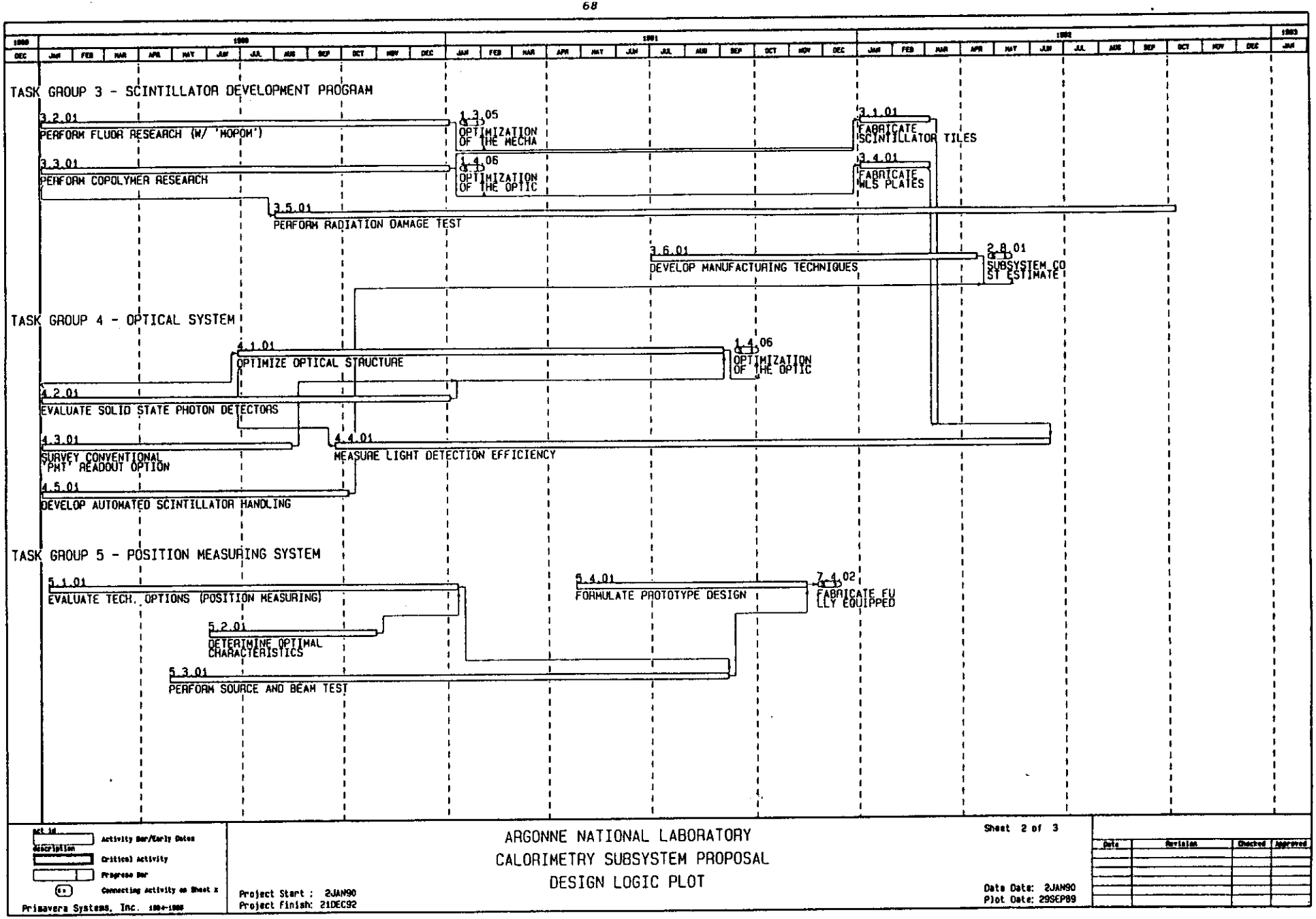
TASK GROUP 3 - SCINTILLATOR DEVELOPMENT PROGRAM
3.2.01
PERFORM FLUOR RESEARCH (W/ 'MOPOM')
1.3.05
OPTIMIZATION OF THE MECHA
3.1.01
FABRICATE SCINTILLATOR TILES
3.3.01
PERFORM COPOLYMER RESEARCH
1.4.06
OPTIMIZATION OF THE OPTIC
3.4.01
FABRICATE WLS PLATES
3.5.01
PERFORM RADIATION DAMAGE TEST
3.6.01
DEVELOP MANUFACTURING TECHNIQUES
2.8.01
SUBSYSTEM CO ST ESTIMATE
TASK GROUP 4 - OPTICAL SYSTEM
4.1.01
OPTIMIZE OPTICAL STRUCTURE
1.4.06
OPTIMIZATION OF THE OPTIC
4.2.01
EVALUATE SOLID STATE PHOTON DETECTORS
4.3.01
SURVEY CONVENTIONAL 'PMT' READOUT OPTION
4.4.01
MEASURE LIGHT DETECTION EFFICIENCY
4.5.01
DEVELOP AUTOMATED SCINTILLATOR HANDLING
TASK GROUP 5 - POSITION MEASURING SYSTEM
5.1.01
EVALUATE TECH. OPTIONS (POSITION MEASURING)
5.4.01
FORMULATE PROTOTYPE DESIGN
7.4.02
FABRICATE FU LLY EQUIPPED
5.2.01
DETERIMINE OPTIMAL CHARACTERISTICS
5.3.01
PERFORM SOURCE AND BEAM TEST
Activity Bar/Early Dates
Critical Activity
Progress Bar
Connecting Activity on Sheet X
Primavera Systems, Inc.
ARGONNE NATIONAL LABORATORY
CALORIMETRY SUBSYSTEM PROPOSAL
DESIGN LOGIC PLOT
Project Start : 2JAN90
Project Finish: 21DEC92
Sheet 2 of 3
Data Date: 2JAN90
Plot Date: 29SEP89

Fig. 14(b)

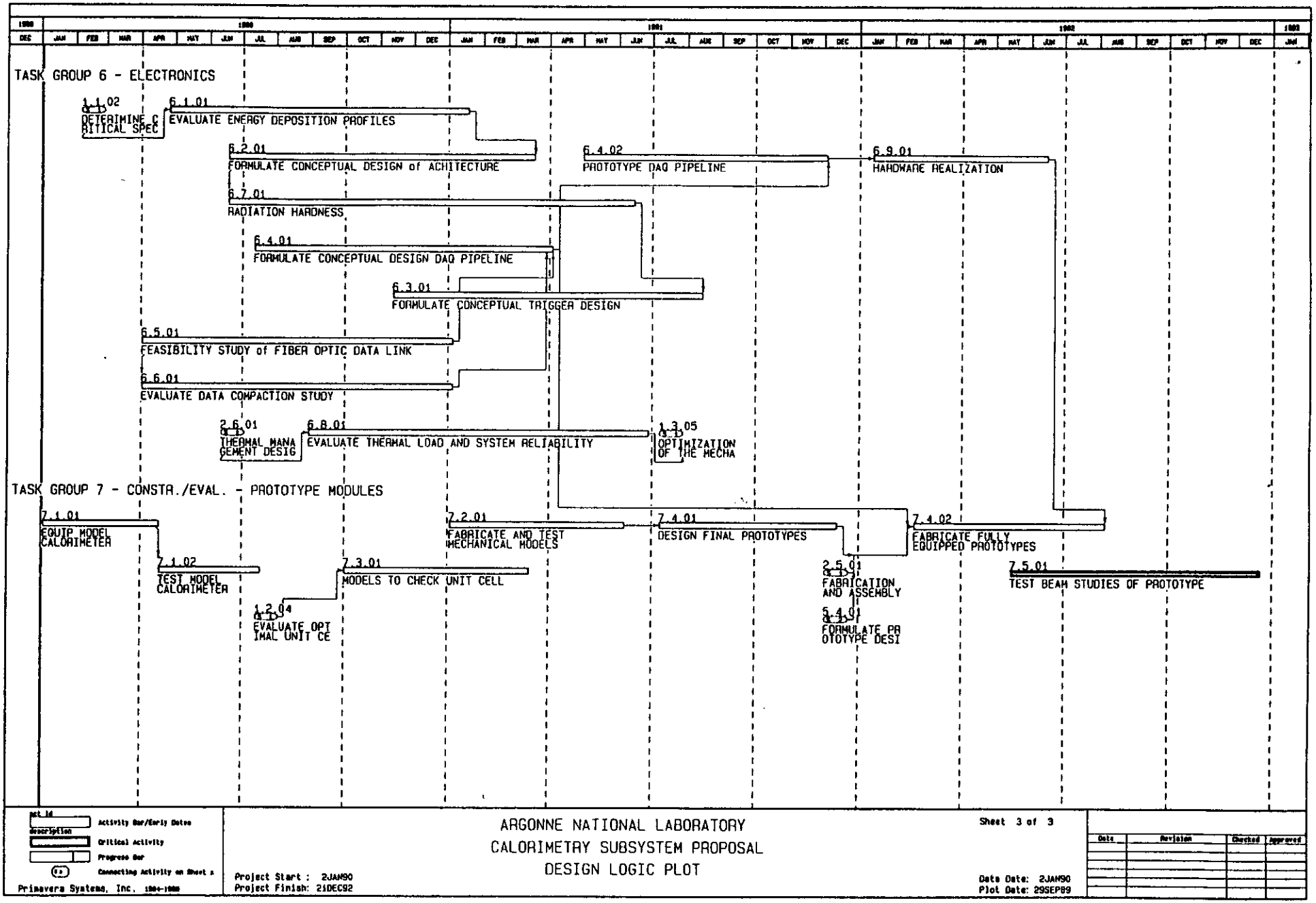
TASK GROUP 6 - ELECTRONICS
1.1.02
DETERMINE C RITICAL SPEC
6.1.01
EVALUATE ENERGY DEPOSITION PROFILES
6.2.01
FORMULATE CONCEPTUAL DESIGN of ACHITECTURE
6.4.02
PROTOTYPE DAQ PIPELINE
6.9.01
HARDWARE REALIZATION
6.7.01
RADIATION HARDNESS
6.4.01
FORMULATE CONCEPTUAL DESIGN DAQ PIPELINE
6.3.01
FORMULATE CONCEPTUAL TRIGGER DESIGN
6.5.01
FEASIBILITY STUDY of FIBER OPTIC DATA LINK
6.6.01
EVALUATE DATA COMPACTION STUDY
2.6.01
THERMAL MANA GEMENT DESIG
6.8.01
EVALUATE THERMAL LOAD AND SYSTEM RELIABILITY
1.3.05
OPTIMIZATION OF THE MECHA
TASK GROUP 7 - CONSTR./EVAL. - PROTOTYPE MODULES
7.1.01
EQUIP MODEL CALORIMETER
7.1.02
TEST MODEL CALORIMETER
7.3.01
MODELS TO CHECK UNIT CELL
1.2.04
EVALUATE OPT IMAL UNIT CE
7.2.01
FABRICATE AND TEST MECHANICAL MODELS
7.4.01
DESIGN FINAL PROTOTYPES
7.4.02
FABRICATE FULLY EQUIPPED PROTOTYPES
2.5.01
FABRICATION AND ASSEMBLY
5.4.01
FORMULATE PR OTOTYPE DESI
7.5.01
TEST BEAM STUDIES OF PROTOTYPE
Activity Bar/Early Dates
Critical Activity
Progress Bar
Connecting Activity on Sheet x
Primavera Systems, Inc.
ARGONNE NATIONAL LABORATORY
CALORIMETRY SUBSYSTEM PROPOSAL
DESIGN LOGIC PLOT
Sheet 3 of 3
Project Start : 2JAN90
Project Finish: 21DEC92
Data Date: 2JAN90
Plot Date: 29SEP89
Date
Revision
Checked
Approved

Fig. 14(c)

Table I
Program Breakdown by Project Year and Institution
($K)

Task	Group #	Institution	PY 1	PY 2	PY 3
Simulation	1	Univ. of Mississippi	122	108	50
		ORNL	90	90	45
		ANL	113	113	50
		VPI	6	6	5
		LSU	5	5	5
Subtotal			336	322	155
Mechanical Design	2	Univ. of Wisconsin	155	0	0
		Westinghouse STC	336	788	0
		ANL	75	75	0
Subtotal			566	863	0
Scintillator Develop.	3	Bicron Corp.	98	92	25
		Florida State Univ.	58	58	0
Subtotal			156	150	25
Optical Design	4	LSU.	55	55	0
		VPI	83	83	0
		ANL	27	27	0
Subtotal			165	165	0
Position Detector	5	ANL	30	30	
Subtotal			30	30	0
Calorimeter Electro.	6	Westinghouse STC	247	500	0
		Univ. of Wisconsin	133	58	0
		Ames Lab.	68	68	0
		ANL	75	75	0
Subtotal			523	701	0
Prototype, Fabrication, and Test	7	ANL	0	300	800
		Westinghouse STC	0	300	300
		Bicron Corp.	0	26	473
		Univ. of Wisconsin	0	0	150
Subtotal			0	626	1723
Test Beam Instrum.	7.5		0	0	650
Total			1778	2857	2553

Table II
Task Cost Breakdown ($K)

Task Description	Group #	FY90	FY91	FY92	Total
Simulation Studies	1	252	325	235	813
Mechanical Design	2	425	789	216	1429
Scintillator Development Program	3	117	158	56	331
Optical System Design	4	124	166	41	332
Position Measuring System	5	23	30	7	60
Calorimeter Electronics	6	360	613	251	1224
Prototype Fabrication	7	0	470	1879	2349
Test Beam Instrumentation	7.5	0	0	650	650
Total		1301	2551	3336	7188

APPENDIX A

Sensitive Medium

Introduction

We propose to use sheets of plastic scintillator as the sensitive medium of the detector. A wealth of experience has been accumulated with this type of material over the years, and techniques exist for handling and measuring the several million panels that will be needed. Because of the large inventory, an automated cutting, wrapping, and measuring system must be set up. The scintillator tiles will be laser cut and must then be wrapped in paper or aluminum foil which has been printed with a programmed pattern of black dots to ensure the same light response at the wavelength shifter for particles incident over the full depth of the tile.

Uniformity in depth in the tower is ensured by the use of a reflective mask at the back of the wavelength shifter. The mask, in addition to taking out variations coming from the light attenuation over the length of the towers, can be adjusted to correct for the variations of scintillator light output layer by layer.

The major issue that must be faced by proponents of the use of scintillator for an SSC detector is that of radiation damage coming from the primary pp interactions themselves. Calculations of the expected dose have been made by an SSC task force and collated in a report by D. Groom.(1)

The results of Fig. 15 show a principal result of this study. The curves give the expected dose per year as a function of pseudorapidity at a radius of 2 m. A year is defined as a mean luminosity of 10^{33} cm^{-2} sec^{-1} for 10^7 secs. The results are calculated for a lead sphere. The mean density of our proposed uranium scintillator calorimeter will be about 8.7 gm cm^{-3}, as compared to 11.35 gm cm^{-3} for lead, so this is not a too unreasonable model. As expected, the highest dose levels are experienced at shower maximum in the electromagnetic section of the calorimeter. At a pseudorapidity of 3(2), which corresponds to a polar angle of 5° (14°), the predicted dose in the calorimeter at shower max is 10 Mrad (0.5 Mrad) per year. In the hadronic

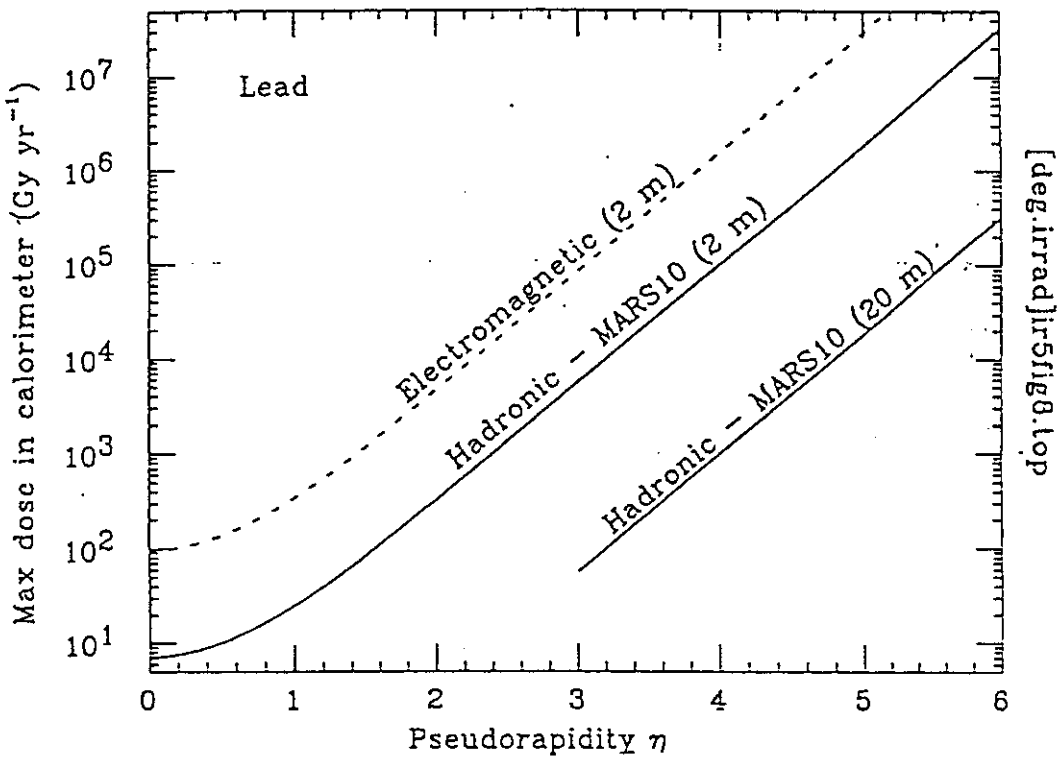

Fig. 15. The maximum hadronic dose in FY yr^{-1} (1 GY = 100 Mrads) as a function of pseudorapidity for a lead sphere, assuming that the maximum dose occurs at the indicated radius. The electromagnetic dose is also shown.

section of the calorimeter, these values are about an order of magnitude smaller. Scintillator able to withstand these doses must be used. Substantial advances have been made recently in scintillator radiation hardness. For instance SCSN38, used in the CDF and ZEUS detectors, is hard to one Mrad or more. The newer SCSN61 shows a smaller instantaneous damage although the long-term effect may be similar to SCSN38. It is to the issue of improved radiation hardness that we now turn.

Radiation-Hard Scintillators

There have recently been a number of significant advances in understanding radiation damage to plastic scintillators. Although the damage mechanisms are not fully worked out, the data[2-6], combined with the general understanding of the mechanisms of chemical bonding, strongly support the theory that the radiation damage in organic scintillator is caused by the breakage of chemical bonds and the formation of new chemical species. The result is a loss of scintillation efficiency and the development of yellow/brown discoloration. In the traditional plastic bases, polystyrene (PS) and polyvinyltolune (PVT), the early damage products introduce absorption in the near UV regions which quenches the light production and competes with the waveshifting process in conventional multi-fluor systems. With increasing dose, organic molecules build up that have the appropriate pi-electron resonance structures to introduce colored species which destroy the light attenuation. This self-healing process is continuous and occurs in plastics but not in liquids. In all the studies carried out so far, this self-healing is overwhelmed by the very large dose rates employed (between 80 krads/hr. and 1 Mrad/hr). The results of Ref. [6] supports the theory that at the exposure rates anticipated at the SSC an equilibrium of the damage and healing processes will exist so that, in many regions, standard commercial plastics will survive quite well.

Improvements in radiation hardness can be engineered by utilizing new fluors having a high Stokes loss so that they totally bypass the UV regions and emit in the blue and green part of the spectrum. The green emitters yield less light, but make a more radiation-hard system. A blue emitting system is

desirable for the present calorimeter design since we hope to read out through green WLS light guides.

The chemistry research will concentrate on fluors of which a few examples, PMP and MOPOM, now exist. Variants on this theme with larger Stokes loss and more resistant structures need to be developed. In light of the results of reference [6], PS and PVT may very well suffice. The former is preferred because of its mechanical properties and its greater amenability to mass production processes. Copolymers of PS should be developed in which the radiation-induced colored resonance states cannot form. An example might combine polyethylene and PS or a polysiloxane and PS.

Wavelength Shifter and Lightguide

An improvement over the ZEUS practice would be to have the green dye located only at the region where waveshifting is needed with the rest of the plate being clear light pipe. Such a design would increase the light transmission. Single cast bars will be developed with this feature which eliminates a glue joint between the two parts. For radiation hardness, the plastic base will be PS instead of PMMA; a quenching additive will be incorporated to eliminate scintillation and a UV absorbent to minimize the effects of Cerenkov radiation. To optimize the light transmission, the bars will be cell cast against glass instead of being produced by an extrusion/rolling process which produces inferior surfaces.

Scintillator Manufacturing

While cell casting produces the best scintillator in regard to light transmission and material uniformity, it is too expensive and cannot hold the tight thickness tolerances needed for the millions of tiles that characterize our design. If a thickness tolerance of 5 - 10% could be obtained, as compared to ~ 15% for the ZEUS scintillator, there would be a more uniform light emission which, in turn, would allow a tighter mechanical design.

There are obvious trade-offs between thickness, photon generation, light collection, and costs The production processes likely to be employed are injection molding or extrusion/rolling. Both are highly economical, with the latter preferred for sheet production since the tiles are generally small in planar dimensions. The surface imperfections produced by these two methods are not a major impediment to achieving acceptable light collection.

Radiation Damage Testing

Radiation sources are available to the collaboration at Florida State University and at Argonne National Laboratory. At Florida State University, there is a 3-MeV electron accelerator that has a beam of approximately 2 cm in diameter. The beam intensity can be varied from 1 nanoamp to 1 milliamp. For materials which have a thickness of about 1.5 gm/cm^2, this accelerator can give a radiation dose of 1 Mrad in times varying from less than a minute to many hours. Samples can also be moved in a scan mode allowing material up to 30 cm long to be radiated. Measurements performed during the past year showed that for plastic and scintillators, radiation damage by this electron accelerator and exposures of the same type material to a gamma source of Cobalt-60 are identical. The advantage of the electron accelerator is that material can be exposed to radiation over a much shorter length of time. Argonne also has an intense Co^{60} source which could be used to supplement the FSU facility if necessary. The light output and attenuation lengths of the irradiated samples would be measured at FSU and LSU.

Argonne has good facilities to do neutron damage studies utilizing the Intense Pulsed Neutron Source. IPNS is a spallation neutron facility in which 500-MeV protons impinge on a uranium target. The resulting neutron spectrum, which peaks near 1 MeV is quite similar to that expected within an SSC detector. Fluxes are in the range of 10^{12} n cm^{-2} sec^{-1} so that a significant test can be done with an exposure of a few minutes. The beam access tubes currently available for parasitic operation, limit the sample sizes to a few cm, but a dedicated facility with the capability to study larger samples exists and could be activated if necessary.

References

1. "Radiation Levels in the SSC Interaction Regions," SSC-SR-1033 (1988).

2. C. Zorn et al., "Pilot Study of New Radiation-Resistant Plastic Scintillators Doped with 3-Hyddroxyflavone," Nucl. Instr. and Meth. A273, 108 (1988).

3. M. Bowen et al., "New Radiation-Resistant Plastic Scintillator," IEEE Trans. on Nucl. Sci., 36, No. 1 (February 1989).

4. S. Majewski et al., "A Pilot Study of Radiation Damage in Liquid Scintillator," Workshop on Scintillating Fiber Development for the SSC, Fermilab, p. 801 (November 1988).

5. A. Bross, "Radiation Damage to Scintillator", ibid., 741.

6. U. Holm and K. Wick, IEEE Trans. on Nucl. Sci., 36, No. 1, p. 579 (February 1989).

APPENDIX B

Options for the Position Measuring System

Experience with the CERN and FNAL colliders shows that position measuring detectors, designed to obtain the position, shape, and pulse height of electromagnetic showers, are extremely powerful aids to electron identification. They can also measure the energy flow in jets associated with neutral particles (π^0's and η's), although this capability has not been exploited to date. Finally, they can provide a statistical separation of isolated prompt photons from π^0/η backgrounds. The detection of prompt photons is essential for comparative studies of the mechanisms of gauge-boson production.

Examples of position measuring systems include: the CDF central strip chamber (gas PWC's at $6X_0$); the UA2 scintillation fiber detector (sampling before and after a $1.5X_0$ preconverter); the UA2 upgrade (warm liquid strip detectors near shower maximum); and the ZEUS silicon pad detectors (3 × 3 cm pads near shower max, with two layers in FCAL, one in BCAL and RCAL). The demonstrated position resolution is 1.7 mm in the CDF strip detector (using 1.5 cm wide channels), and ~ 0.5 mm in the UA2 preshower detector. Both the CDF and UA2 detectors provide strong rejection against QCD jets and punchthrough pions. For example, for events triggered on low P_t electrons (P_t > 8 GeV) in the CDF detector, the strip chambers provide a factor of ~ 30 additional rejection against backgrounds, as compared with the basic requirement of a high P_t track associated with an electromagnetic cluster. Combining the strip information with the calorimeter and the particle position measured in the central tracker gives a clean electron signal in CDF, before making cuts on the energy-momentum match.

Further study is needed to evaluate the tradeoffs involved in using a preshower detector at the front of the calorimeter versus a detector at shower maximum. The preshower detector is essential for prompt photon identification, but has a lower electron efficiency than a shower-max detector. Also the shower-max detector would be required for measuring the

neutral energy flow in jets. We expect that both systems will be needed for any large solenoidal detector, and we will consider here only the shower max system, which must be integrated into the calorimeter design.

The proposed cell size (10×10 cm^2) is rather coarse compared with the Moliere radius of an electromagnetic shower of ~ 20 mm in the proposed uranium scintillator stack. The lateral shower size grows approximately linearly with depth. At $6X_0$, the shower size, projected along an axis transverse to the shower, has 50% containment in ±3 mm, 80% containment ±9 mm, and 95% containment ±24 mm. Electromagnetic showers are characterized by a two-component structure; the narrow component has an exponential falloff ~ exp (- x/3 mm), and at $6X_0$ includes 80% of the shower secondaries, while the broad component (due to Compton-scattered photons) has an exponential falloff ~ exp(-x/14 mm), including the remaining 20% of the secondaries. The granularity of the position detector should be such that the leading strip or pad contains less than ~70% of the total pulse height. This suggests a channel spacing of ~ 1 cm or less, and suggests a projective geometry as in CDF to limit the number of readout channels (1 x 1 cm^2 pads would require ~ 125,000 readout channels per meter detector length in the barrel calorimeter). Such a system would achieve the desired 1-2 mm position resolution for track matching, and adequate determination of shower shape to reject punchthrough pions. We remark that pulse height resolution is also important for pion rejection (this is the main function of the ZEUS silicon pad system). However, the pulse-height resolution is dominated by shower fluctuations, not by the intrinsic dE/dX resolution achieved for minimum-ionizing particles. Thus, intrinsic energy loss resolution is not at a premium, and even a low resolution gas PWC can provide the necessary pulse height resolution.

One robust approach would be to use scintillating strips, read out by WLS fibers embedded on the strips. Using stereo matrix of crossed strips could provide adequate resolution in both Z and azimuthal directions. Another possibility would be to use an array of ganged scintillating fibers. We intend to investigate possible scintillator designs, and to optimize by simulation and test-beam studies the placement and segmentation of this detector.

Additional studies are needed to optimize this detector for measurements of neutral energy flow in jets. For accurate multi-jet spectroscopy, measurements of the shape (invariant mass) and direction of the jets is comparable in importance to measurement of the jet energy. By combining the tracking information which gives the energy flow of the charged hadrons with the neutral energy profile, it will be possible to optimize the jet-jet mass resolution, beyond that already provided by the 0.05×0.05 calorimeter segmentation.

APPENDIX C

Choice of Radiator

In order to achieve a compensating calorimeter, possible combinations of the radiator and the sensitive material are severely restricted. In this proposal, we will consider only depleted uranium and/or lead as radiators and scintillator as the sensitive medium. The advantages of using depleted uranium are well known: It allows for a high density compensating calorimeter with $1X_0$ sampling; it is a good structural material with mechanical properties similar to mild steel, and it can be easily fabricated into plates of the required size and thickness. Any required notches or slots can be punched.

Although compensation and the resultant superior resolution in hadronic energy measurements are important, there are other advantages in choosing uranium. Control of the systematic errors in the energy measurement becomes the dominant experimental challenge at the high energies of the SSC. The natural radioactivity of the uranium provides an excellent calibration signal that is constantly sampled. It is inserted at exactly the same location as the energy deposition of the jets and, thus, tests the entire readout chain. The natural radioactivity of the uranium creates a "DC" current in the PMT's. The lifetime of the PMT's is known from several studies to be dependent only on the total charge passing through the final dynodes. Therefore, in order to not shorten the lifetime of the tube unnecessarily, the radioactivity must be reduced. This was done in the ZEUS calorimeter by cladding the plates in a thin (0.2 or 0.4 mm) steel foil.

The benefits of the cladding, however, extended beyond the consideration of the tube lifetime. For example, the radiation exposures of personnel involved in the construction of the calorimeter are significantly reduced, and the plates can be easily handled without danger of rubbing off the uranium oxide surface.

The question of personnel safety and containment of radiation in case of a fire in the detector was of great concern to the DESY Laboratory, since the Lab is located in a large urban area. Various tests of model calorimeter

structures were made and it was determined that the uranium oxide was completely contained within the cladding when the calorimeter was exposed to a flame at 1000°C for a duration exceeding one hour. Indeed, it was not possible to see any damage to the plates. A similar experiment was done with bare uranium plates. No aerosols of uranium compounds were formed.

An obvious, but important, property of the uranium used in calorimeters is its density of 18.5 gm cm^{-3}. A factor of two in density is equivalent to a factor eight in volume of material in the calorimeter, and also exerts great economic leverage on the muon detector which lies outside of the calorimeter. Depleted uranium is the densest material available in economical quantities. It has been chosen as the absorbing material by several recent collaborations: the UA-1 upgrade at CERN, D0 at FNAL; L3 at LEP; and ZEUS at DESY. Different readout schemes were used with each: TMP at UA-1; Liquid Argon at D0; gas readout at L3; and scintillator plus PMT at ZEUS. Three of the detectors used thin plate in the electromagnetic sections of the calorimeter (i.e., the first 25 X_0 or so), but D0 and UA-1 used unalloyed material, whereas ZEUS used the U-Nb (1.7%) alloy throughout.

The use by ZEUS of the alloyed material for thin plates (~ 3.3 mm in thickness) requires extra steps in the processing compared to the 5 or 6 mm plates used by D0, but is otherwise satisfactory. The production of the long plates (3.2 to 4.6 m), the techniques of welding uranium to itself, and the technique of encapsulating the plates in steel foil have all been realized in production mode by the ZEUS collaboration. The punching of holes and cutouts to precise locations has also been routinely achieved at Manufacturing Sciences Corporation (MSC). An early R&D program at MSC led to optimal procedures for making the uranium plates used in the the ZEUS calorimeter.

The major known constraint on the use of uranium for an SSC calorimeter is the cost. We therefore propose to investigate the dependence of the production costs of suitable plate on the size and shape of the cast billet. It may be possible to reduce or eliminate steps in the rolling process by choosing the size and thickness of the billet. The yield in the production process (defined as the ratio of the weight of finished plate to the weight of

the raw billet) is also affected by the "patternmaker's problem", the cutting of the finished plates from the rolled plate with minimum waste. These aspects of the process were not fully realized for ZEUS because of the schedule and relatively small size of the order. For several thousand tons, such as required for the SSC, these questions are of vital importance. The goals of this aspect of the program would be to establish the data base required to accurately estimate production costs of uranium in plate form, in quantities of thousands of tons.

The factors most obviously controlling the cost are: billet casting - size and weight and its effect on the yield; rolling to gauge and cutting to size, and finally, cladding the plates as described below. In regard to the cost of rolling and cutting, in collaboration with the DOE, we will also investigate the possibility of obtaining sufficient unalloyed material at an acceptable cost since the pure metal is easier to fabricate. Metallurgical procedures for removing the niobium from the alloy during the process of casting the billets will also be investigated.

A major thrust is to determine the feasibility and economy of alternate approaches to the problem of cladding the plate. The techniques used in wrapping the steel foil around the ZEUS plates is quite labor-intensive and suited only for simple flat plates. Since approximately a quarter of a million plates are needed for this SSC calorimeter, the purchase of a wrapping machine that could bend and weld the thin steel cladding in one operation is justified.

Other techniques such as electroplating and plasma arc deposition of cladding materials have not yet been seriously investigated and might be competitive alternatives. The problems encountered in electroplating, which has been done by L3, are: (a) the cost of the procedure; and (b) the problem of achieving the desired thickness with the required uniformity. The latter is a result of the finite conductivity of the uranium. An attractive alternative is the plasma arc deposition of Zinc, Iron, or Nickel. An unfortunate characteristic of this technique is that, while a relatively uniform coating can be deposited, the coating tends to be porous and rough.

Certainly it is not smooth enough to be used as an equipotential surface as is required in liquid Argon calorimetry, for example.

Lead is a serious alternative to uranium as the convertor material. It was chosen by the SLD collaboration for their calorimeter. The lead alloy used included 0.06% of calcium and 1.3% of tin, and had a tensile strength of about 8000 psi. It can be made in large sheets with a very uniform thickness. Further improvement of the strength of such alloys up to perhaps 12,000 psi are possible. The use of such an absorber will, however, require a more complex mechanical structure. Several alternative techniques in the use of lead must be explored. In addition to alloying, these include the possibility of casting the lead in a steel matrix which will provide for a transfer of the compression load from plate to plate, and the possibility of using a lead-fiber composite material.

Designs that combine lead and uranium radiators will also be explored. For example, the use of uranium in the electromagnetic section and lead in the hadronic sections.

APPENDIX D

Photon-Charge Transducers

The proposed calorimeter has between 40K and 50K individual channels, and the first step in the signal processing is to turn the light coming from the scintillator and wavelength shifter into an electrical pulse by means of a photon-charge transducer. A dynamic range of ~ 10^5 to 1 is required with good linearity and the device must obviously be reliable and stable in operation over long periods of time.

The conventional way of doing this job is through the use of photomultiplier tubes (PMT). The scintillation light is directed onto the photocathode through a wavelength shifter bar and lightguide. The ejected photoelectrons are amplified by the dynode structures with a gain of ~ 3 at each dynode. After ten or more stages of amplification, large pulses become available at the anode and the last dynode. Even though this technique is mature and well understood, it has some shortcomings. In particular, the PMT and its high voltage base are bulky and not tolerant of magnetic fields.

If PMT's are to be used in the proposed calorimeter, then they should be of small size (≤ 1.5" dia.) and have high gain. A 10-stage tube, such as the R580 tube made by Hamamatsu of Japan, would be suitable. This tube has been adopted by the ZEUS experiment. Typically, this kind of tube has a dynamic range corresponding to a peak pulse of ~ 160 ma into a 50 Ω load impedance. For experiments at the SSC, it is desirable to miniaturize the tube further.

The conventional high voltage bases, made of resistors, capacitors, and Zener diodes, are not suitable for this calorimeter since they generate too much heat (1 to 2 watts per base). The high voltage cables are also too heavy and bulky. A large number of high voltage cables are difficult to bring out of the detector without creating holes, and they could also provide serious fire hazards. For the ZEUS experiment, an elegant "Cockcroft-Walton" accelerator-type base has been developed by the VPI group,[1] in which the high voltage is locally generated within each individual base. This type of

base generates only about 0.15 watts of heat per channel. A 100 kHz oscillator in the base is energized by a DC source of 24 volts, and the rf output is raised to ~ 120 volts by a small ferrite transformer. A Cockcroft-Walton chain, made of capacitors and rectifiers, is then powered by this rf to produce the desired high voltage for the PMT. The stability of the high voltage is maintained to within ±0.3 volts by an analog feedback loop. The noise level in the anode output is ~ 0.020 pC, which is comparable to that of the conventional resistive tube bases.

The high voltage controller used with these bases are VME bus devices. They have local intelligence, software in EPROM's, ADC's, Ethernet, and RS232 communication ports. Each individual base plugs into the controller through a twisted-pair flat cable, which carries the low voltage DC power and control signals to the base. This system will work for the proposed calorimeter without significant modifications, although we expect to use up-to-date processors and optical fibers as the commmunication channel.

In principle, photodiodes or phototriodes, are ideal devices for this calorimeter. They are physically small and could be installed directly on the scintillators. Also, no high voltages are required for their operation. Unfortunately, the devices currently available commercially, have too high a noise level and can be damaged by radiation. Their peak response is at a wavelength of about 1000 nm, while the scintillation radiation is in the range of 400 nm. More research is needed in this area. We plan to pursue ths subject on a lower priority basis as resources allow.

Rockwell International has produced a revolutionary new device called the solid-state photomultiplier.[2] It has high quantum efficiency (~ 70%), and can detect single photons. Preliminary test results show that the device has the highest potential for use in SSC detectors, particularly for scintillator fiber tracking. A drawback of the SSPM is that it has to be operated at a temperature of 7°K. We will study the potential use of these devices for our scintillator calorimeter. At the present time, its use and further development is also restricted by Department of Defense sanctions again dissemination of technical information.

References

1. B. Lu, L. W. Mo, and T. Nunamaker, "The Cockroft-Walton Photomultiplier Tube Base and Test Results," ZEUS Note 88-036 (1988).

2. M. D. Petroff and N. C. Stepelbroek, IEEE Trans. on Nucl. Sci. 36, 158 (1989).

APPENDIX E

Data Communication by Fiber Optics

The many well-known attributes of fiber-optics - wide bandwidth, freedom from electromagnetic interference, elimination of common mode voltage problems, physical flexibility, and small size and weight - will make it very useful for data communication associated with the calorimeter. In particular, fiber optics will be used for the transfer of detected data from the outer surface of the calorimeter to the remotely-located processing circuitry, and for synchronization of data processed by dispersed electronic circuitry.

Optical fiber has very significant advantages for connecting multiple data-origination points to a remote processor. Because of the small diameter of optical fibers, it is possible for over 1000 fibers to be contained within seven compact cables, each one having a diameter of less than half an inch. Because fiber provides very wide bandwidth in addition to small size and flexibility, it is also very convenient to use for delay equilization. If, for example, the remote processor is located at a distance of 70 m from the center of the calorimeter, all of the fibers could be made 100 m in length, so that the signals from all detectors arrive at the same instant. It is not difficult to match delays with a tolerance of less than 1 ns.

Fiber optics can be used to communicate either analog or digital data, but digital transmission has been almost universally used at high data rates because of modal noise effects associated with the laser diode light sources that are required for high frequency modulation. The performance of existing high rate digital links is sufficient to meet the requirements of this calorimeter. With recent advances in distributed feedback lasers (DFB) that limit the optical output to a single longitudinal mode, the use of high frequency analog transmission is increasing. The linearity of DFB lasers is also very good, as is evidenced, for example, by their use of multichannel television transmission for cable TV. It is possible that analog data transmission can be used in some instances if digital data transmssion is impractical.

In addition to data transmission, fiber optics will provide the best means for synchronizing the operation of circuitry that is physically dispersed. In particular, a 62.5 MHz clock signal could be distributed to all of the detectors, by means of equal-length fibers to provide the precise, interference-free timing that is essential for calorimeter signal processing. The number of long fibers can be reduced, if desired, by using passive fiber-optic stars to divide a primary input on one fiber equally between many output fibers, which can then be run to multiple secondary points.

Radiation hardened optical cables will be required, although the radiation levels are expected to be modest (10 year gamma dose of 4×10^4 RAD). Radiation hardened cables are available from many manufacturers, including AT&T, Polymicro Technologies, Dainichi-Nippon, Raychem, and Spectran. Selection of a cable is complicated by the fact that the effects of radiation vary depending on the rate of radiation, the total dose, the temperature, the topical wavelength, the capability of recovery, and the type of radiation. In general, higher temperatures and longer optical wavelengths reduce the increases in optical attenuation that result from radiation. Fibers with pure silica cores are less affected, so most hardened cables use step-index fibers rather than the graded-index fibers that would provide wider bandwidths. As a result, for multi-mode fibers, the bandwidth of hardened cables may be a more important limitation for the trigger application than is the increase in attenuation resulting from the modest calorimeter radiation environment. AT&T offers radiation hardened single mode fibers with zero dispersion at 1310 nm. These fibers do not have to have as much radiation resistance as some others, but their availability in a standard single single-mode configuration make them an excellent choice for high-bandwidth applications operating in modest radiation environments.

APPENDIX F

Signal Processing Issues

Introduction

An SSC detector will experience a beam crossing every 16 nsec, and at design luminosity, each crossing will have an average of 1.6 events. The time between crossings is too short for the calorimeter to read out the data and provide a trigger decision. Therefore, the data will need to be stored in a pipeline until the first-level trigger decision can be made in typically a few μsec after the crossing. In order to avoid deadtime, the trigger electronics itself must also be pipelined: every process in the trigger must be repeated every 16 nsec, or broken into parallel ranks of logic, which are switched every 16 nsec. The trigger electronics must be able to accept a new event every 16 nsec, which puts severe constraints on the design.

We propose to investigate a calorimeter trigger and data acquisition system that is fully pipelined with 16 nsec clocking with a first-level trigger decision to be reached in 2 μsec. The feasibility of this system will be studied through modeling and some prototype construction. There are several technological developments that we consider to be critical to the success of the first-level trigger concept that we present here. We have identified these areas and propose research to develop them.

These areas are chosen because they are not employed in present trigger designs, but they are expected to be part of an SSC trigger. For example, the measurement of input charge every 16 nsec either requires a completely new system, both for analog sampling and for digitization that is performed remote from the detector, or it requires fast digitization on the detector with very high bandwidth data transmission. For the former case we propose to develop a switched capacitor device, as well as a monolithic pulse shaping network that we hope to incorporate in a single chip which will be mounted on the calorimeter. For the latter case, we propose to develop a front end employing GaAs shift registers and optical fibers. The optimal implementation of this

architecture requires innovation in board construction techniques beyond those presently used.

Trigger Design

The calorimeter trigger is based on several quantities. Among these are: the total energy deposited in the calorimeter, the sum of transverse energy and the missing p_T In addition, the number and energies of jets and isolated muons and electrons must be determined. The philosophy of this trigger is to collect information at the rate of the crossing frequency in order to minimize the probability of event overlap confusing the trigger. It does not imply that the full calorimeter data acquisition system collects information at this rate. This does mean that the subset of information, used by the trigger, is acquired at the crossing frequency.

The calculations required for the calorimeter trigger include summing all of the energies from pulse heights recorded in the photomultipliers every 16 nsec. In addition, calculation of the transverse energy and missing p_T requires energies to be determined from these pulse heights and multiplication by geometric factors. The detection of jets requires preservation of individual tower information. The detection of an electron requires evidence of electromagnetic energy. This is done by tower by tower comparing the energy deposited in the first interaction length of the tower with that deposited later. Identification of isolated energy is also an integral part of the triggering.

As part of the design, we will investigate techniques to test the rapid rates of trigger data processing. Our design strategy will include several stages where artificial data can be injected, beginning with the initial digitization and continuing through the trigger pipeline to its output. We intend to place much emphasis on ease of troubleshooting. It is also planned to provide hardware histogramming capability at the input and output to continuously monitor the trigger system. Input and output events that result in a first level trigger be retained and read out through the data acquisition system.

Overview of an SSC Calorimeter Data Acquisition & Trigger System Overview

In order to put the calorimeter electronics in perspective, we outline a possible architecture for the data acquisition and trigger system for a complete SSC detector in Fig. 16. All of the data are stored in a pipeline, clocked at 16 nsec, for 2 μsec while the first level trigger calculations are being performed. For some components, such as the calorimeter, this pipeline may be an analog device that stores charge. For other components, such as the tracking detectors, the information may already be in digital form and so is stored in a digital pipeline. The trigger for all components is pipelined and deadtimeless, accepting data from a new crossing every 16 nsec. The first level trigger operates on a subset of the full data. Each component completes its internal trigger calculations and passes information for a particular crossing to a pipelined global trigger 1 μsec after the crossing occurred. The global first level trigger issues a decision 1 μsec after receiving information from the individual components. Therefore, the total level 1 trigger time is 2 μsec. If a first-level trigger is not issued for a crossing 2 μsec after it occurs, the data are discarded. The disposition of every event and some basic information about it is retained for analysis of trigger performance. The design goal of the first level trigger is to reduce the input crossing rate of 62.5 MHz to less than 100 KHz. An important part of this study is to understand and how this reduction factor can be achieved.

The issuing of a first-level trigger causes data to be transferred to buffers in front of the second level trigger processor. While we do not include studies of the second-level trigger in the proposal, we comment that we also expect the second-level trigger processor is pipelined in the sense that there are events in buffers in front of it. The second level trigger may also involve a series of parallel processors. The second level trigger does calculations on one event at a time, using the full data set for the event. In the case of the calorimeter, while the first level trigger would examine groups of phototubes with a reduced digitization accuracy, the second level trigger performs calculations on the individual channels using the full dynamic range of the phototubes. The second level trigger should be able to perform iterative calculations that are not possible in the pipelined

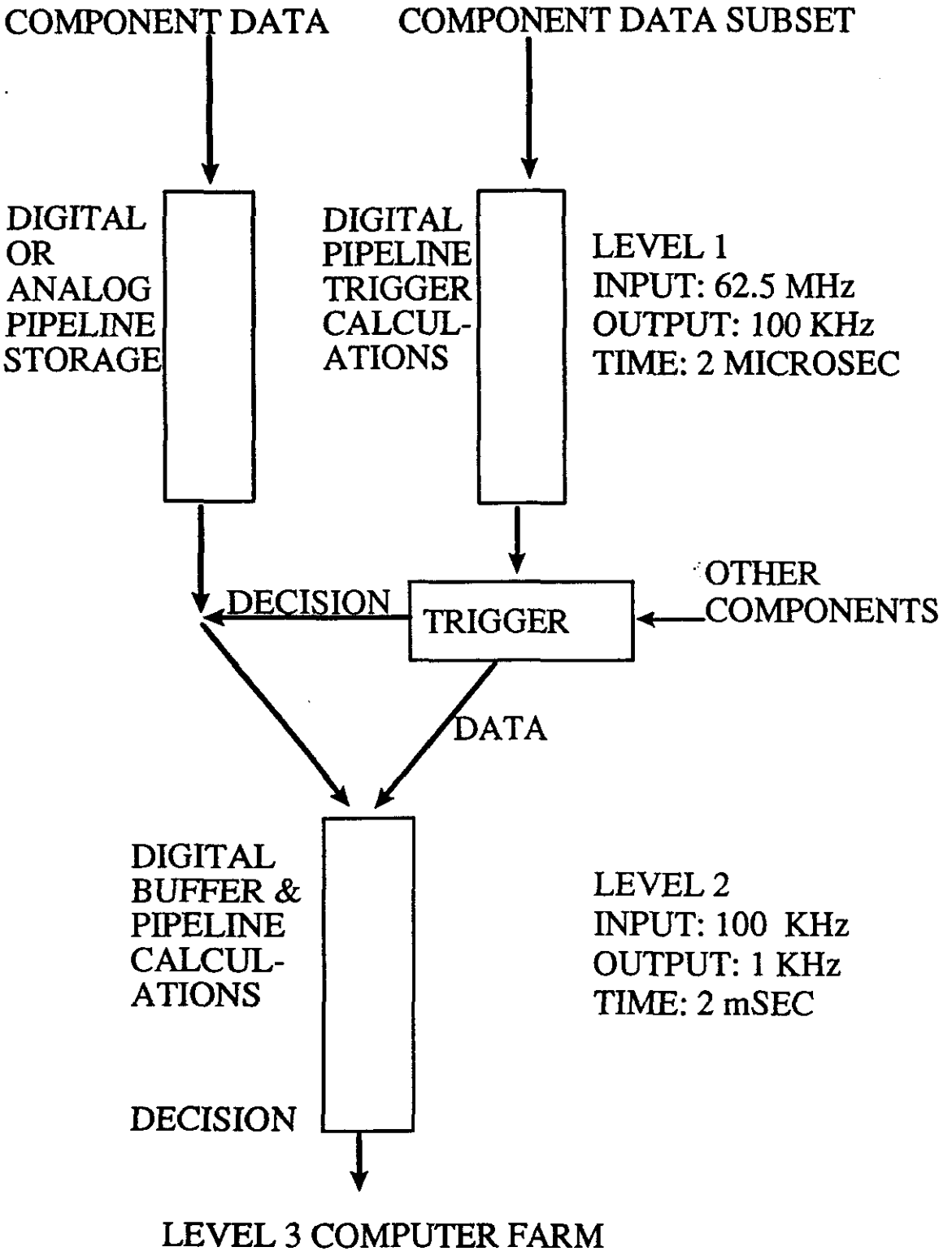

Figure 16. SSC Trigger and Data Acquisition System

structure of the first level trigger. It is anticipated that these features will enable the second level trigger to achieve a reduction of the first-level trigger rate from 100 KHz to 1 KHz. The data passing the second level trigger is then sent to the level three computer farm. We anticipate that this farm would be using the new generation of high performance processors expected in the 1990's.

An outline of the structure of Level 1 Calorimeter Trigger and Data Acquisition system in Fig. 17. Although the diagram explicitly uses an input from photomultipliers, the basic principles hold for many detector elements. A fraction of the input current from several channels is summed together and sent to the trigger system. The remaining input currents are shaped and individually stored in analog pipelines. The trigger pipeline performs calculations involving calorimeter quantities and then passes data forward to a global trigger processor, which combines these results with results from other components. All of the analog pipelines are centrally controlled by the global trigger. If no trigger is accepted, the data falls off the end of the analog pipeline. If a trigger is issued, the pipeline is stopped and the data for the relevant crossing are transferred to an analog buffer. The analog pipeline is then restarted. Meanwhile, the contents of the buffer are multiplexed and digitized.

Overview of the Calorimeter First Level Trigger

An analog sum is made of all sections of a trigger tower and a second sum is made of all the hadronic sections. The number and geometry of trigger towers strongly couples the trigger design and the calorimeter design. We expect that the tower geometry will be set by the positions of the electromagnetic supertower sections. A supertower is some clustering of calorimeter towers, including the possibility of a single tower. These are compared to hadronic sections so that there is an hadronic sum sum for every electromagnetic sum. These may then be flash-digitized.

The structure of the calorimeter trigger is severely constrained by the necessity to repeat each step and to pass processed information to the next

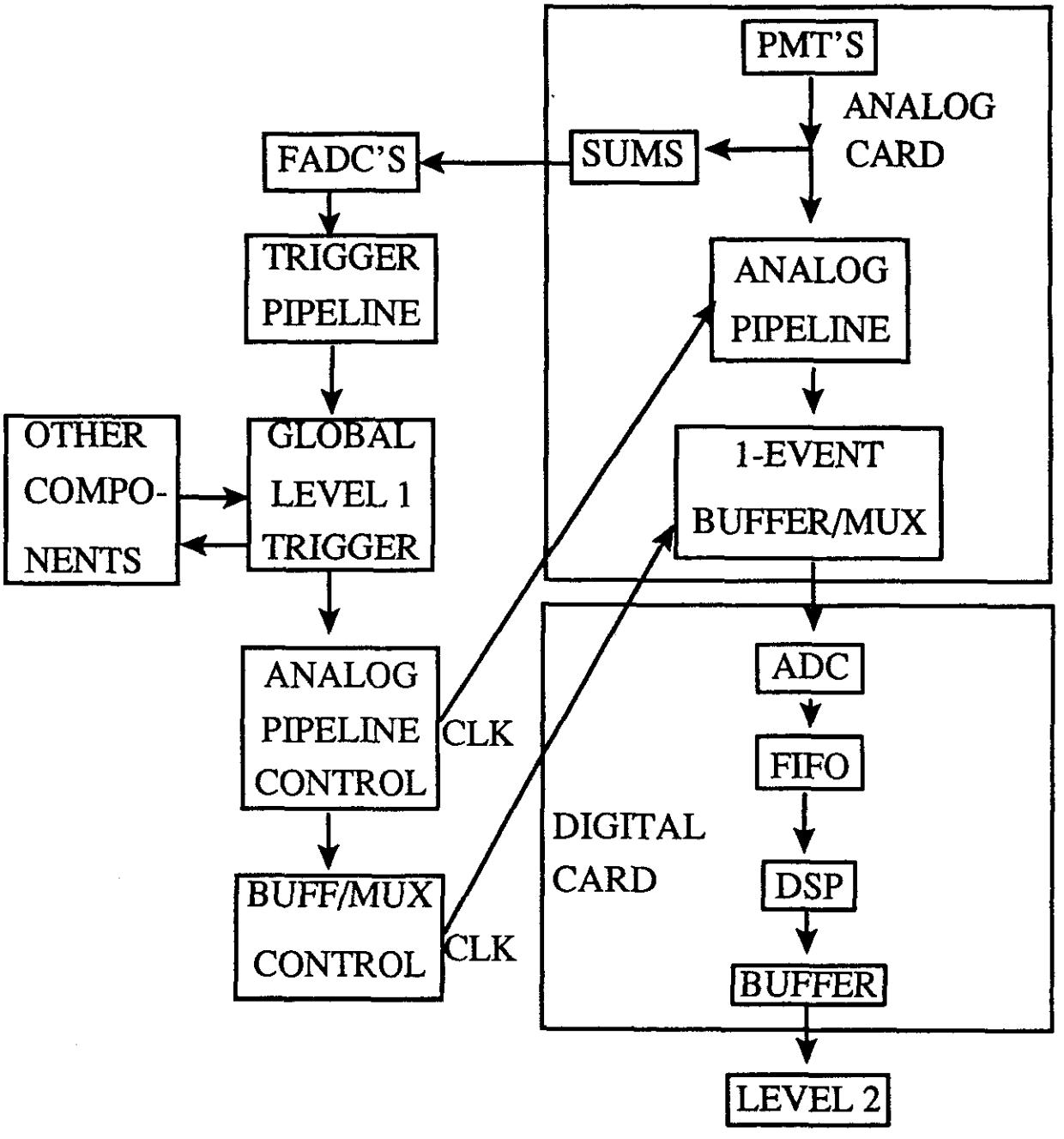

Figure 17.SSC Level 1 Trigger and Data Acquisition System

step every 16 nsec. The trigger must first form the total energy, transverse energy and missing p_T sums. Given an electromagnetic or hadronic supertower sum of energy E_i located at polar angle j_i and azimuthal angle f_i, the sums may be formed from the quantities E_i (total energy), $E_i \sin j_i$ (transverse energy) and the components $E_i \sin j_i \cos f_i$ (missing E_x) and $E_i \sin j_i \cos f_i$ (missing E_y). The digitized electromagnetic and hadronic pulseheight from each of the supertowers are stored, multiplied by lookup tables containing these geometric factors and injected into the summing networks.

The formation of jet, isolated muon and isolated electron triggers in a pipelined fashion is considerably more complicated than making sums. One possible design uses tables to make local tests on the amount of energy in an individual supertower. The ratio of electromagnetic to hadronic energy will also be tested. The results of these tests are encoded and passed forward with the energy sums to a search table that looks for matches with desired patterns. Local energy sums and tests are also made.

In summary, the overall organization of the calorimeter first level trigger begins with the supertower sums made on analog frontend cards. These analog sums are shaped and digitized on the detector. The trigger sum circuit digitizes these signals and sends them via optical fiber link to the trigger encoder circuits which linearize, sum and test these digital values and pass them on to the trigger processor. The trigger encoder circuits then communicate over a high-speed links to the calorimeter trigger processor, which in turn sends results to the Global Level 1 Trigger. The logical organization of the trigger is illustrated in Figure 18.

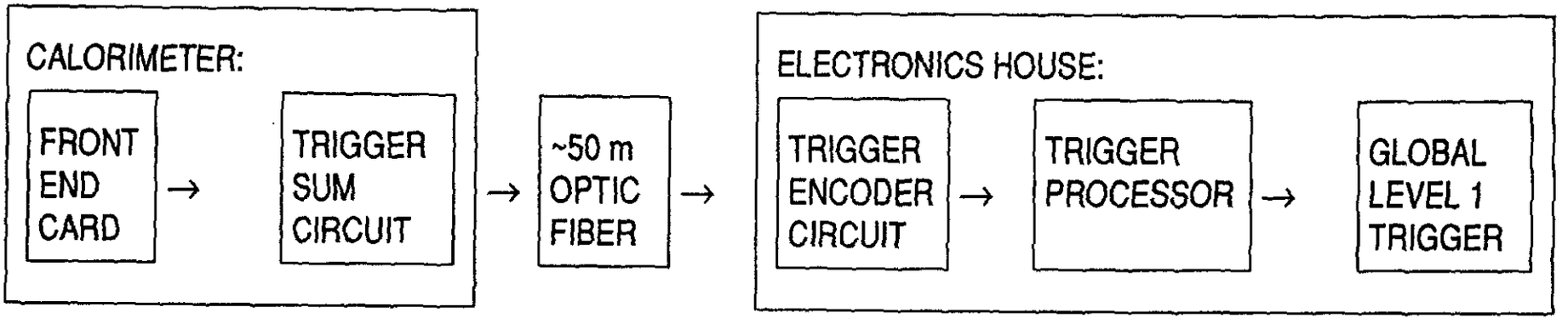

Figure 18. Logical flow and location of a Calorimeter First Level Trigger.

Calorimeter Subsystem Cost Details

Version: 9/29/89

(FY90 $K)

Cost Items	Project Year PY 90	PY 91	PY 92	Total 3 Yrs
Grand Total, All Tasks	**1778**	**2858**	**2553**	**7188**
Task Group 1 - Simulation Studies	**336.33**	**321.90**	**155.00**	**813.24**
Argonne National Laboratory - Sub Total	**113.00**	**113.00**	**50.00**	**276.00**
Simulation (1 FTE Post doc)	42.00	42.00		
Computing	50.00	50.00		
Supplies (tapes, paper,etc)	6.00	6.00		
Travel (@ $1K per trip)	15.00	15.00		
Virginia Polytechnic Institute - Sub Total	**5.96**	**5.96**	**5.00**	**16.92**
Computing	0.00	0.00		
Supplies (tapes, paper,etc)	1.00	1.00		
Travel (@ $1K per trip)	3.00	3.00		
Overhead @ 49%	1.96	1.96		
Louisiana State Univ. - Sub Total	**4.92**	**4.92**	**5.00**	**14.84**
Computing	0.00	0.00		
Supplies (tapes, paper,etc)	1.00	1.00		
Travel (@ $1K per trip)	3.00	3.00		
Overhead @ 23%	0.92	0.92		
University of Mississippi - Sub Total	**122.45**	**108.02**	**50.00**	**280.48**
Simulation (1 FTE Post doc)	36.00	36.00		
Programmer Support	15.86	15.86		
Research Assistants	6.00	6.00		
Computer Fee	10.00	0.00		
Communication	5.00	5.00		
Supplies (tapes, paper,etc)	4.00	4.00		
Travel (@ $1K per trip)	8.00	8.00		
Overhead @ 44.3%	37.59	33.16		
Oak Ridge National Laboratory - Sub Total	**90.00**	**90.00**	**45.00**	**225.00**
Programming Support (1 FTE Prog.)	90.00	90.00		

Calorimeter Subsystem Cost Details

Version: 9/29/89 (FY90 $K)

Cost Items	Project Year PY 90	PY 91	PY 92	Total 3 Yrs
Task Group 2 - Mechanical Design	**566.35**	**863.00**	**0.00**	**1429.35**
Argonne National Laboratory - Sub Total	**75.00**	**75.00**	**0.00**	**150.00**
Technical Support (0.5 FTE Tech.)	30.00	30.00		
Engr. (1 FTE designer; 0.3 FTE ME)	30.00	30.00		
Travel (@ $1K per trip)	15.00	15.00		
Westinghouse S & T Center - Sub Total	**336.00**	**788.00**	**0.00**	**1124.00**
Engineering Services	336.00	788.00		
Univ. of Wisconsin - Sub Total	**155.35**	**0.00**	**0.00**	**155.35**
Technical Support	15.00	0.00		
Pb alloy/Composite Study Contract	40.00	0.00		
DU Plate Mfgr. Study Contract	60.00	0.00		
Misc.	15.00	0.00		
Travel (@ $1K per trip)	15.00	0.00		
Overhead @ 44.3%	10.35	0.00		
Task Group 3 - Scin. Develop. Prog.	**156.08**	**150.08**	**25.00**	**331.16**
Bicron Corporation - Sub Total	**98.00**	**92.00**	**25.00**	**215.00**
Fabr. of 510 scin. tiles	15.00	13.00		
Matls. for fluor development	1.00	2.00		
Univ. of Akron consulting	45.00	0.00		
Matls. for rad-hard plastic develop.	15.00	22.00		
Fabr. of WLS bars	16.00	13.00		
Samples for radiation studies	3.00	5.00		
Mfgr. process setup	0.00	41.00		
Travel (@ $1K per trip)	3.00	5.00		
Florida State Univ. - Sub Total	**58.08**	**58.08**	**0.00**	**116.16**
Technical Support	28.00	28.00		
Electron Accel. Maint.	5.00	5.00		
Misc. Expenses	10.00	10.00		
Travel (@ $1K per trip)	5.00	5.00		
Overhead @ 21%	10.08	10.08		

Calorimeter Subsystem Cost Details

Version: 9/29/89 (FY90 $K)

Cost Items	Project Year PY 90	PY 91	PY 92	Total 3 Yrs
Task Group 4 - Optical System Design	**165.79**	**165.79**	**0.00**	**331.58**
Argonne National Laboratory - Sub Total	**27.00**	**27.00**	**0.00**	**54.00**
Technical Support (0.25 FTE Tech.)	15.00	15.00		
Parts & Supplies (test setup, parts)	5.00	5.00		
Travel (@ $1K per trip)	7.00	7.00		
Louisiana State Univ. - Sub Total	**55.35**	**55.35**	**0.00**	**110.70**
Technical Support	30.00	30.00		
Parts & Supplies (test setup, parts)	10.00	10.00		
Travel (@ $1K per trip)	5.00	5.00		
Overhead @ 23%	10.35	10.35		
Virginia Polytechnic Institute - Sub Total	**83.44**	**83.44**	**0.00**	**166.88**
Technical Support (0.5 FTE Post doc)	30.00	30.00		
Test Matls.	10.00	10.00		
Misc. Expenses	7.00	7.00		
Travel (@ $1K per trip)	9.00	9.00		
Overhead @ 49%	27.44	27.44		
Task Group 5 - Position Meas. Sys.	**30.00**	**30.00**	**0.00**	**60.00**
Argonne National Laboratory - Sub Total	**30.00**	**30.00**	**0.00**	**60.00**
Technical Support (0.4 FTE Tech.)	20.00	20.00		
Develop. Proto. (matls., parts)	10.00	10.00		

Calorimeter Subsystem Cost Details

Version: 9/29/89

(FY90 $K)

Cost Items	Project Year PY 90	PY 91	PY 92	Total 3 Yrs
Task Group 6 - Calorim. Electronics	**523.19**	**700.79**	**0.00**	**1223.99**
Ames Laboratory - Sub Total	**68.1975**	**68.1975**	**0**	**136.40**
Technical Support (0.4 FTE EE)	30	30		
Materials (El. Comp., FADCs, etc.)	5	5		
Misc. (test fixtures, constr., etc.)	5	5		
Travel (@ $1K per trip)	5	5		
Overhead (50% on direct, Ames Lab)	22.50	22.50		
Overhead (3.1% on total, Iowa State)	0.70	0.70		
Argonne National Laboratory - Sub Total	**75.00**	**75.00**	**0.00**	**150.00**
Technical Support (0.5 FTE EE)	50.00	50.00		
Radhard Testing (test setup, parts)	15.00	15.00		
Travel (@ $1K per trip)	10.00	10.00		
Westinghouse S & T Center - Sub Total	**247.40**	**500.00**	**0.00**	**747.40**
Conceptual design & test	240.00	0.00		
Detailed design & test	0.00	500.00		
Travel (@ $1K per trip)	7.40			
Univ. of Wisconsin - Sub Total	**132.60**	**57.60**	**0.00**	**190.19**
Technical Support (1 FTE Post doc)	16.50	16.50		
Engineering Services	100.00	25.00		
Misc.	5.00	5.00		
Travel (@ $1K per trip)	5.00	5.00		
Equipment (0% OH)	0.00	0.00		
Overhead @ 23%	6.10	6.10		

Calorimeter Subsystem Cost Details

Version: 9/29/89

(FY90 $K)

Cost Items	Project Year PY 90	PY 91	PY 92	Total 3 Yrs
Task Group 7 - Prototype Fab. & Test	**0.00**	**626.00**	**2373.00**	**2999.00**
Argonne National Laboratory - Sub Total	0.00	300.00	800.00	1100.00
Bicron Corporation	0.00	26.00	473.00	499.00
Westinghouse S & T Center - Sub Total	0.00	300.00	300.00	600.00
Univ. of Wisconsin - Sub Total	0.00	0.00	150.00	150.00
Test Beam Instr. & Test - Sub Total	0.00	0.00	650.00	650.00
Totals by Institution	**1778**	**2858**	**2553**	**7188**
Ames Laboratory - Total	68.20	68.20	0.00	136.40
Argonne National Laboratory - Total	320.00	620.00	850.00	1790.00
Bicron Corp. - Total	98.00	118.00	498.00	714.00
Test Beam Instr. & Test - Total	0.00	0.00	650.00	650.00
Florida State Univ. - Total	58.08	58.08	0.00	116.16
Louisiana State Univ. - Total	60.27	60.27	5.00	125.54
University of Mississippi - Total	122.45	108.02	50.00	280.48
Oak Ridge National Laboratory - Total	90.00	90.00	45.00	225.00
Virginia Polytechnic Institute - Total	89.40	89.40	5.00	183.80
Westinghouse S & T Center - Total	583.40	1588.00	300.00	2471.40
Univ. of Wisconsin - Total	287.95	57.60	150.00	495.54

Appendix G - Cost Details

Calorimeter Subsystem Cost Details

Version: 9/29/89 (FY90 $K)

Cost Items	Fiscal Year FY 90	FY 91	FY 92	Total 3 FYs
Grand Total, All Tasks	**1301**	**2551**	**3336**	**7188**
Task Group 1 - Simulation Studies	**252.25**	**325.51**	**235.48**	**813.24**
Argonne National Laboratory - Sub Total	**84.75**	**113.00**	**78.25**	**276.00**
Simulation (1 FTE Post doc)	31.50	42.00		
Computing	37.50	50.00		
Supplies (tapes, paper,etc)	4.50	6.00		
Travel (@ $1K per trip)	11.25	15.00		
Virginia Polytechnic Institute - Sub Total	**4.47**	**5.96**	**6.49**	**16.92**
Computing	0.00	0.00		
Supplies (tapes, paper,etc)	0.75	1.00		
Travel (@ $1K per trip)	2.25	3.00		
Overhead @ 49%	1.47	1.96		
Louisiana State Univ. - Sub Total	**3.69**	**4.92**	**6.23**	**14.84**
Computing	0.00	0.00		
Supplies (tapes, paper,etc)	0.75	1.00		
Travel (@ $1K per trip)	2.25	3.00		
Overhead @ 23%	0.69	0.92		
University of Mississippi - Sub Total	**91.84**	**111.63**	**77.01**	**280.48**
Simulation (1 FTE Post doc)	27.00	36.00		
Programmer Support	11.90	15.86		
Research Assistants	4.50	6.00		
Computer Fee	7.50	2.50		
Communication	3.75	5.00		
Supplies (tapes, paper,etc)	3.00	4.00		
Travel (@ $1K per trip)	6.00	8.00		
Overhead @ 44.3%	28.19	34.27		
Oak Ridge National Laboratory - Sub Total	**67.50**	**90.00**	**67.50**	**225.00**
Programming Support (1 FTE Prog.)	67.50	90.00		

Appendix G - Cost Details

Calorimeter Subsystem Cost Details

Version: 9/29/89 (FY90 $K)

Cost Items	Fiscal Year FY 90	FY 91	FY 92	Total 3 FYs
Task Group 2 - Mechanical Design	**424.76**	**788.84**	**215.75**	**1429.35**
Argonne National Laboratory - Sub Total	**56.25**	**75.00**	**18.75**	**150.00**
Technical Support (0.5 FTE Tech.)	22.50	30.00		
Engr. (1 FTE designer; 0.3 FTE ME)	22.50	30.00		
Travel (@ $1K per trip)	11.25	15.00		
Westinghouse S & T Center - Sub Total	**252.00**	**675.00**	**197.00**	**1124.00**
Engineering Services	252.00	675.00		
Univ. of Wisconsin - Sub Total	**116.51**	**38.84**	**0.00**	**155.35**
Technical Support	11.25	3.75		
Pb alloy/Composite Study Contract	30.00	10.00		
DU Plate Mfgr. Study Contract	45.00	15.00		
Misc.	11.25	3.75		
Travel (@ $1K per trip)	11.25	3.75		
Overhead @ 44.3%	7.76	2.59		
Task Group 3 - Scin. Develop. Prog.	**117.06**	**158.33**	**55.77**	**331.16**
Bicron Corporation - Sub Total	**73.50**	**100.25**	**41.25**	**215.00**
Fabr. of 510 scin. tiles	11.25	13.50		
Matls. for fluor development	0.75	1.75		
Univ. of Akron consulting	33.75	11.25		
Matls. for rad-hard plastic develop.	11.25	20.25		
Fabr. of WLS bars	12.00	13.75		
Samples for radiation studies	2.25	4.50		
Mfgr. process setup	0.00	30.75		
Travel (@ $1K per trip)	2.25	4.50		
Florida State Univ. - Sub Total	**43.56**	**58.08**	**14.52**	**116.16**
Technical Support	21.00	28.00		
Electron Accel. Maint.	3.75	5.00		
Misc. Expenses	7.50	10.00		
Travel (@ $1K per trip)	3.75	5.00		
Overhead @ 21%	7.56	10.08		

Calorimeter Subsystem Cost Details

Version: 9/29/89 (FY90 $K)

Cost Items	Fiscal Year FY 90	FY 91	FY 92	Total 3 FYs
Task Group 4 - Optical System Design	**124.34**	**165.79**	**41.45**	**331.58**
Argonne National Laboratory - Sub Total	**20.25**	**27.00**	**6.75**	**54.00**
Technical Support (0.25 FTE Tech.)	11.25	15.00		
Parts & Supplies (test setup, parts)	3.75	5.00		
Travel (@ $1K per trip)	5.25	7.00		
Louisiana State Univ. - Sub Total	**41.51**	**55.35**	**13.84**	**110.70**
Technical Support	22.50	30.00		
Parts & Supplies (test setup, parts)	7.50	10.00		
Travel (@ $1K per trip)	3.75	5.00		
Overhead @ 23%	7.76	10.35		
Virginia Polytechnic Institute - Sub Total	**62.58**	**83.44**	**20.86**	**166.88**
Technical Support (0.5 FTE Post doc)	22.50	30.00		
Test Matls.	7.50	10.00		
Misc. Expenses	5.25	7.00		
Travel (@ $1K per trip)	6.75	9.00		
Overhead @ 49%	20.58	27.44		
Task Group 5 - Position Meas. Sys.	**22.50**	**30.00**	**7.50**	**60.00**
Argonne National Laboratory - Sub Total	**22.50**	**30.00**	**7.50**	**60.00**
Technical Support (0.4 FTE Tech.)	15.00	20.00		
Develop. Proto. (matls., parts)	7.50	10.00		

Calorimeter Subsystem Cost Details

Version: 9/29/89 (FY90 $K)

Cost Items	Fiscal Year FY 90	FY 91	FY 92	Total 3 FYs
Task Group 6 - Calorim. Electronics	**360.00**	**613.20**	**250.79**	**1223.99**
Ames Laboratory - Sub Total	**26.25**	**35.00**	**75.15**	**136.40**
Technical Support (0.4 FTE EE)	22.50	30.00		
Materials (El. Comp., FADCs, etc.)	3.75	5.00		
Misc. (test fixtures, constr., etc.)	3.75	5.00		
Travel (@ $1K per trip)	3.75	5.00		
Overhead (50% on direct, Ames Lab)	16.88	22.50		
Overhead (3.1% on total, Iowa State)	0.52	0.70		
Argonne National Laboratory - Sub Total	**48.75**	**65.00**	**36.25**	**150.00**
Technical Support (0.5 FTE EE)	37.50	50.00		
Radhard Testing (test setup, parts)	11.25	15.00		
Travel (@ $1K per trip)	7.50	10.00		
Westinghouse S & T Center - Sub Total	**185.55**	**436.85**	**125.00**	**747.40**
Conceptual design & test	180.00	60.00		
Detailed design & test	0.00	375.00		
Travel (@ $1K per trip)	5.55	1.85		
Univ. of Wisconsin - Sub Total	**99.45**	**76.35**	**14.40**	**190.19**
Technical Support (1 FTE Post doc)	12.38	16.50		
Engineering Services	75.00	43.75		
Misc.	3.75	5.00		
Travel (@ $1K per trip)	3.75	5.00		
Equipment (0% OH)	0.00	0.00		
Overhead @ 23%	4.57	6.10		

Appendix G - Cost Details

Calorimeter Subsystem Cost Details

Version: 9/29/89 (FY90 $K)

Cost Items	Fiscal Year FY 90	FY 91	FY 92	Total 3 FYs
Task Group 7 - Prototype Fab. & Test	**0.00**	**469.50**	**2529.50**	**2999.00**
Argonne National Laboratory - Sub Total	**0.00**	**225.00**	**875.00**	**1100.00**
Bicron Corporation	**0.00**	**19.50**	**479.50**	**499.00**
Westinghouse S & T Center - Sub Total	**0.00**	**225.00**	**375.00**	**600.00**
Univ. of Wisconsin - Sub Total	**0.00**	**0.00**	**150.00**	**150.00**
Test Beam Instr. & Test - Sub Total	**0.00**	**0.00**	**650.00**	**650.00**
Totals by Institution	**1301**	**2551**	**3336**	**7188**
Ames Laboratory - Total	26.25	35.00	75.15	136.40
Argonne National Laboratory - Total	232.50	535.00	1022.50	1790.00
Bicron Corp. - Total	73.50	119.75	520.75	714.00
Test Beam Instr. & Test - Total	0.00	0.00	650.00	650.00
Florida State Univ. - Total	43.56	58.08	14.52	116.16
Louisiana State Univ. - Total	45.20	60.27	20.07	125.54
University of Mississippi - Total	91.84	111.63	77.01	280.48
Oak Ridge National Laboratory - Total	67.50	90.00	67.50	225.00
Virginia Polytechnic Institute - Total	67.05	89.40	27.35	183.80
Westinghouse S & T Center - Total	437.55	1336.85	697.00	2471.40
Univ. of Wisconsin - Total	215.96	115.18	164.40	495.54