SSC PC-032
37 PAGES

DATE: 02 October 1989

Proposal for Research and Development of a Liquid Argon Calorimeter for the SSC

G.S. Abrams,[8] K. Amako,[7] A.R. Baden,[9] T. Bowen,[1] T. Burnett,[17] V. Cook,[17] L. Cremaldi,[11] R. Davisson,[17] N. DiGiacomo,[9] P. Draper,[13] J. Faust,[6] T. Ferbel,[13] D. Fong,[9] G. Forden,[1] T.A. Gabriel,[12] H.A. Gordon,[2*] D.E. Groom,[8] N. Hadley,[9] V. Hagopian,[5] T. Handler,[15] J. Hauptman,[6] D. Hitlin,[3] O. Inaba,[7] E. Jenkins,[1] K. Johns,[1] L. Keller,[14] F. Kirsten,[8] T. Kondo,[7] S. Kunori,[9] M. Levi,[8] F. Lobkowicz,[13] H. Ma,[2] P. Mockett,[17] G.T. Mulholland,[4] M. Murtagh,[2] M. Pang,[6] V. Radeka,[2] D. Rahm,[2] J. Reidy,[11] S. Rescia,[2] J. Rothberg,[17] J. Rutherfoord,[1] M. Shupe,[1] J. Siegrist,[8] A. Skuja,[9] D. Summers,[11] Y. Watanabe,[16] H. Weerts,[10] R.W. Williams,[17] J. Womersley[5]

[1] University of Arizona, Tucson, AZ 85721
[2] Brookhaven National Laboratory, Upton, NY 11973
[3] California Institute of Technology, Pasadena, CA 91125
[4] Fermilab, Batavia, IL 60510
[5] Florida State University, Tallahassee, FL 32306-3016
[6] Iowa State University, Ames, IA 50011
[7] KEK, Tsukuba-shi, Ibaraki-Ken, Japan
[8] Lawrence Berkeley Laboratory, Berkeley, CA 94720
[9] Martin Marietta Astonautics, Denver, CO 80201
[10] University of Maryland, College Park, MD 20742
[11] Michigan State University, East Lansing, MI 48824-1116
[12] University of Mississippi, University, MS 38677
[13] Oak Ridge National Laboratory, Oak Ridge, TN 37831-6369
[14] University of Rochester, Rochester, NY 14627
[15] Stanford Linear Accelerator Center, Stanford, CA 94309
[16] University of Tennessee, Knoxville, TN 37996-1200
[17] Tokyo Institute of Technology, Tokyo 152, JAPAN
[18] University of Washington, Seattle, WA 98195
* Contact - 516-282-3740, bnlcl6::gordonh, gordonh@bnlcl1, FAX 516-282-3719

ABSTRACT

We propose to develop a design for a liquid argon calorimeter for the SSC. In parallel with beam tests to ascertain whether lead would be an acceptable absorber, we will proceed with the preliminary design of the entire SSC calorimeter. The design will pursue two options simultaneously:
A) local preamps with ferrite core transformers and
B) solutions compatible with operation in a 2T magnetic field such as remote preamps and electrostatic transformers. Other activities will include the development of high voltage and signal feedthroughs.

Contents

Chapter 1:
Introduction 2

Chapter 2:
Hadronic Response for Various Absorbers 4

2.1. Stack Design - BNL 4

2.2. Cryostat - Washington 6

2.3. Data Acquisition - Maryland 8

2.4. Test Beam - BNL 8

Chapter 3:
Prototype SSC Designs 9

3.1. Local preamps and module design to work up to 0.5 T - BNL, Rochester, Fermilab 10

3.1.1. Cooling the Preamps in situ - Fermilab, LBL, KEK, BNL, MMA . 10

3.1.2. Electrodes Structure and Magnetic Transformers - BNL, Rochester 11

3.2. Alternatives to the Helios Readout design - LBL 13

3.3. Common issues 15

3.3.1. Tile Development - Michigan State 15

3.3.2. Radiation Hardness Testing - Florida State, BNL 16

3.3.3. Lead and Uranium Absorber - FSU, BNL 17

3.3.4. Simulation Issues - Mississippi, LBL, FSU, Iowa State, ORNL, Tennessee 17

3.3.5. Brite Pads - Washington 18

3.3.6. Alternative Pad Structures - Arizona 18

3.3.7. Interaction Between the Detector Subsystems R&D on Liquid Argon Calorimeter and on Front End Electronics 20

3.3.8. Design of a full sized-module 20

3.3.9. Industrialization 21

Chapter 4:
Summary of Costs, Manpower, and Milestones 22

4.1. Milestones 22

Chapter 5:
Appendix I. AGS Test Beams 24

Chapter 6:
Appendix II. Budgets 25

6.1. Arizona - Budget 31

6.2. BNL - Budget 31

6.3. Florida State - Budget 32
6.4. Iowa State University - Budget 32
6.5. Lawrence Berkeley Laboratory - Budget 33
6.6. University of Maryland - Budget 33
6.7. MSU - Budget 33
6.8. U. of Mississippi - Budget 34
6.9. ORNL - Budget 34
6.10. Rochester - Budget 34
6.11. University of Washington, HEPL. - Budget 36

Chapter 1.
Introduction

More than a decade has passed since the pioneering work of Willis and Radeka[1] that established Liquid Argon (LAr) sampling calorimeters (coupled with low noise electronics) as well-matched to High Energy Physics requirements. Large systems evolved early-on (e.g. the MARK II), and continue to be built for present-day experiments (e.g. E706, SLD, DØ, HELIOS, VENUS and H1).

This lengthy history has led to considerable experience in designing, building and operating large LAr systems. Thus at the Tuscaloosa Workshop on Calorimetry for the SSC, a closely reasoned and detailed case for LAr calorimetry could be constructed. In particular, issues like hermeticity and schedule established that LAr calorimetry, while by no means a perfect calorimetry technique for the SSC (indeed, no calorimeter is perfect in such a harsh environment), calorimetry could be conservatively designed to perform within the most stringent SSC requirements

At the meeting of the Solenoid Detector Experiment in Dallas, June, 1989 we tried to write the requirements that any calorimeter should meet. These requirements are given in Table 1.1. There were several items that were identified as needing more work which we intend to pursue in parallel to this proposal. The survivability requirement is non-negotiable and may be a lower limit if the machine outperforms the design. The dynamic range is set on the low end by wanting to see minimum ionizing particles for μ identification and on the high end by the top energy that is expected. The compensation is not expressed as the more familiar e/π but as a maximum constant term in the resolution. The time resolution recognizes that there will be many events in every bucket, so only a E_{jet} >20 GeV is required to be identified with a given bucket. The segmentation needs more study but may be determined by the desire to identify W's into jets. The total depth needs more study to find out what is needed to reduce the background to SUSY signatures from QCD multijet events when more than one leaks out the back. The position resolution reflects the need to identify electrons. The noise is derived from the need to look for isolated electrons. The hermeticity and η range need more study but of course are quite important for designing the real detector. We aim in this proposal not to focus on all of these requirements, since liquid argon almost certainly will satisfy them, but to study those that are related to liquid argon and to solve the more practical problems which must be solved before a real SSC detector can be designed.

The time scale of fabricating detectors for the SSC is likely to take more than 7 years and so it is crucial that this work be supported aggressively so that it can be completed before the serious detailed design and engineering for a specific detector begins. Therefore we intend to complete the work proposed in 2 years. A lot of the proposed work will be done by several institutions which will work independently with close communications.

Table 1.1: Physics Requirements for a Calorimeter at the SSC

Parameter	Requirement	Basis of requirement
Survivability	Able to withstand 25 MR at $\eta = 3$ at $R = 4$m	Estimated 10 years of operation at the SSC
Dynamic Range	μ(Minimum Ionizing Signal, MIS) 2–3 > pedestal? 4 TeV electromagnetic 6 TeV in jet cone	Linking central detector with μ system New Z' Test of compositeness
Resolution (linearity, stability, uniformity, calibration)	$EM : \frac{\Delta E}{E} = \frac{15\%}{\sqrt{E}} \oplus 1\%$ $\frac{\Delta E}{E} = 0.5\%$@100GeV HAD: $\frac{\Delta E}{E} = \frac{50\%}{\sqrt{E}} \oplus 2\%$	$\Gamma_{Z'}$ $h^0 \to \gamma\gamma$ * $80 < M_h < 180$GeV Compositeness
Time resolution	μ is minimum ionizing given the correct bucket $E_{jet} > 20$GeV $\Delta t \leq 16$nsec	μ ID
Segmentation EM $\Delta\eta = \Delta\varphi$ HAD Longitudinal Segmentation	 .02 .04 $\lesssim 3$ sections	 perhaps position resolution $W \to jj$ μ ID
Total Depth	$8\,\lambda$??	Compositeness SUSY
Position resolution	$\sim$ 1mm in EM	electron ID
Noise	MIS 2–3 > Pedestal Electron isolation $E_T < 4$GeV in $\Delta R \sim 0.2$?	μ ID 4th Generation Family Top > 140GeV
Hermeticity	< 2% dead material at cracks and corners ? $\not{E}_T \approx$ real ν background $\lesssim 50$GeV ?	$W \to \ell^+\ell^-\nu\bar{\nu}$ Light (250GeV) gluino SUSY
η range	$\lvert\eta\rvert < 5.5$?	$W \to \ell^+\ell^-\nu\bar{\nu}$

? indicates the need for more study

* This piece of physics will require a dedicated experiment.

Chapter 2.
Hadronic Response for Various Absorbers

2.1. Stack Design - BNL

We propose to construct and test in a beam of hadrons and electrons a module of sufficient transverse dimensions and deep enough longitudinally to measure the energy resolution, e/π and containment of various absorbers:

(1.) pure lead
(2.) lead clad with material predicted by EGS to suppress the electron response and
(3.) uranium.

The e/π obtained using uranium/liquid argon (U/LAr) from $D\emptyset$ (≈ 1.05)[2] and HELIOS (≈ 1.1) at 100ns measurement time[3] are probably acceptable for an SSC calorimeter.[4] An alternative may be lead, but the only full scale Pb/LAr tests have used very shallow stacks and in the case of SLD have large errors ($e/\pi \approx 1.26 \pm 0.1$)

We intend to fabricate several separate stacks which can share the same electronics. To ensure that such tests can be done as soon as possible, we use a slight modification of the electrode design used in HELIOS and their electronic chain. We propose to measure the response and noise for at least two values of t_m : 50 and 100 nsec.

The module will have a transverse size of $100 \times 100cm^2$ and depth of 10λ. There will be 4 equal longitudinal divisions in the readout. The segmentation is given in Table 2.1.1. The unit cell has a sheet of lead, a 2mm argon gap, a signal board and another 2mm argon gap. We plan to test at least 2 stacks with perhaps different thicknesses of lead and cladding to enhance the e/π ratio.

It is quite possible that Pb plates could be used as the radiator material of a LAr calorimeter for the SSC. At present there is substantial uncertainty in just what the SSC response requirements might be and just what the response of a Pb LAr calorimeter many absorption lengths deep would be. The SLD tests of a 2.8 λ Pb LAr calorimeter, backed by a 5 λ Fe PWC calorimeter, measured an electron to pion response ratio of 1.24 at 11 GeV.[1] However, it is quite possible that an 8 λ Pb-LAr calorimeter would show a decrease from this value. The integration time might also have some effect on this ratio and the response needs to be measured with the time constant appropriate for the SSC. One of the central results of the SSC LAr tests will be to determine the response of a Pb LAr calorimeter using the fast integration time appropriate for the SSC.

The SLD test calorimeter used 12 mm Pb absorber plates with G10 read out boards in the gaps between them. Detailed EGS studies predict that the response to electrons will be about 5% lower in this configuration than one using 6 mm Pb plates and 6 mm Pb tiles as the read out. This occurs because there are half as many surfaces in the 12 mm Pb plate configuration for shower energy to leak from the Pb into the LAr gap. Electric field direction may also influence the response so that operating the G10 boards at negative potential with respect to the plates might further reduce the response to electrons. Another set of EGS studies shows that cladding the Pb plates with about 1 mm of Fe further reduces the response to electron showers by about 5%. Hence using a combination Pb-Fe plate

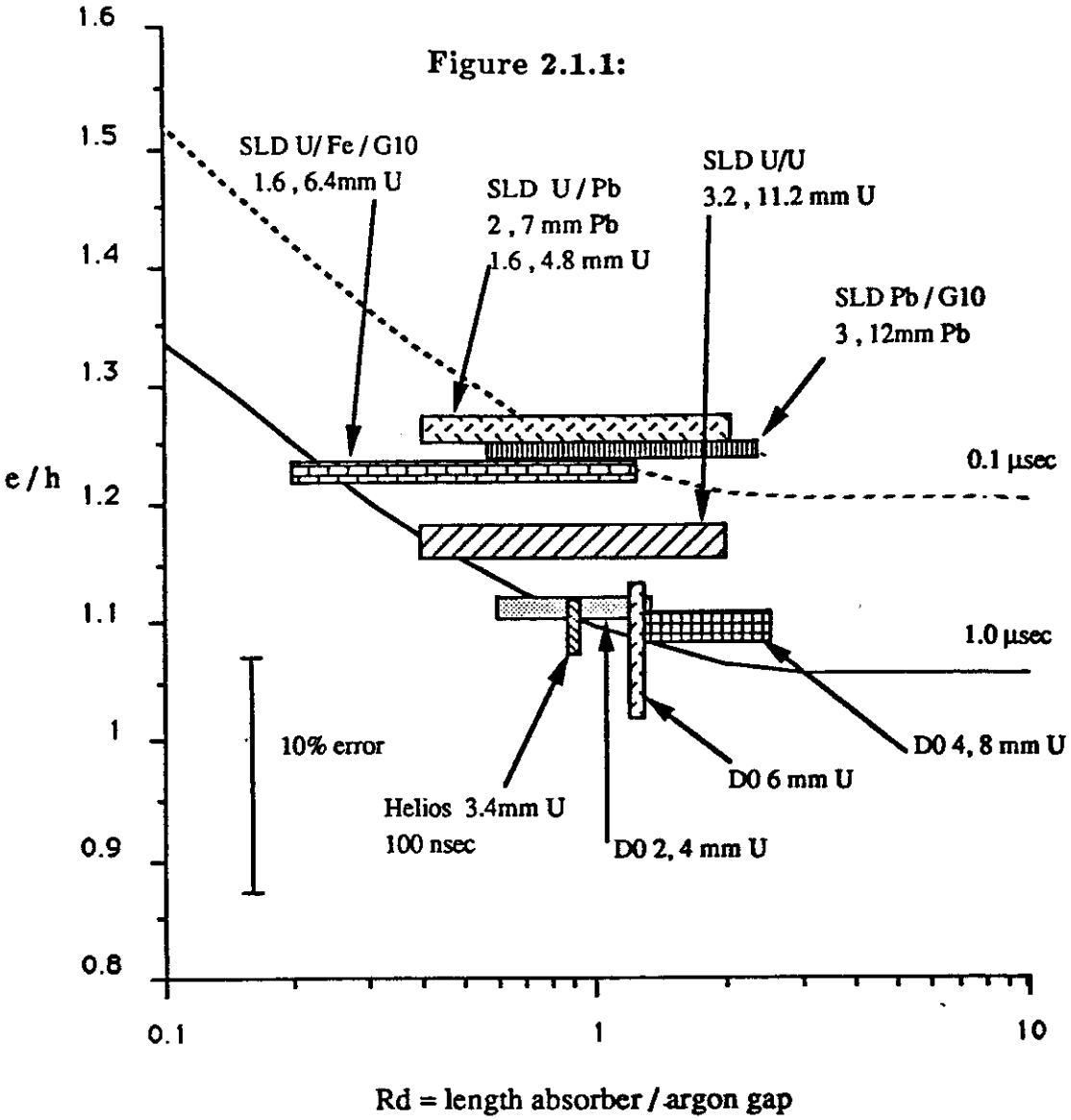

Figure 2.1.1 Comparison of the prediction by Wigmans for e/h in uranium liquid argon calorimeters and experimental data. The curves are the predictions for two different integration times by Wigmans [NIM A259(1987) 389]. Only the curves for uranium are shown. The prediction for Pb absorber with 1 microsec integration time is about 0.05 units above the 0.1microsec curve for U.
The experimental data are from three experiments:
-SLD [IEEE Trans. of Nucl.Sc., Vol 33, No. 1(1986) and D.Hitlin at Workshop on Compensated Calorimetry, Caltech 1985].
- D0 [NIM A269(1988)492 and NIM A280(1989)36].
- NA34 or Helios priv. communication V.Polychronakos.
Only data below 50Gev were used to estimate the experimental results and the range in Rd is caused by having a fine sampling electromagnetic section followed by a coarser hadronic section. In such a case it is unclear where to put the experimental point and the covered range in Rd is indicated. Only two results were measured with a uniform calorimeter (Helios and D0 with 6mm U). These two data points also correctly reflect the quoted experimental error. All other data points do not reflect the correct experimental error . The errors for SLD are of order 10% and of order 3% for the other two D0 points.
Both the D0 and SLD data were taken with integration times of order 2.5 to 3.5 microsec, whereas the Helios data were taken with 100nsec and 250nsec integration times.

Table 2.1.1: Segmentation of Test Stack

	X_0	λ	No. cells	C/channel (nf)	No. channels	depth (cm)
HAD1		2.5	32	5.7	80	56.
HAD2		2.5	32	5.7	80	56.
HAD3		2.5	32	5.7	80	56.
HAD4		2.5	32	5.7	80	56.
Totals		10	128		320	≈ 224

could reduce the electron response by about 10% or so. We plan to compare stacks made of 12 mm Pb plates with and without Fe cladding. That should enable us to optimize a radiator stack for use at the SSC.

The signal boards will have 2.54 cm strips alternately interleaved (x and y) in each section. The interleaving provides redundancy, extra information about the transverse profile of the shower, and a measure of the sampling fluctuations. The connection scheme and coupling transformer will follow closely the HELIOS method of achieving low inductance charge transfer to the preamp. The preamps will be based on the JFET's on high resistivity silicon developed jointly by BNL and Interfet, Inc. This will allow the preamp hybrid to operate directly in the liquid argon. Heat dissipation will not cause any problem in this test since the preamps will be on the outer perimeter of the stack. The shaping amplifiers will allow t_m to be changed easily between 50 and 100 nsec.

The results obtained here will be compared to analogous tests with the HELIOS calorimeter at CERN already available and which hopefully will soon be at lower energies. This will allow a decision to be made on the absorber choice in conjunction with the physics requirements.

An estimate of the costs and manpower required to fabricate these stacks is in Table 6.2.1.

2.2. Cryostat - Washington

The University of Washington Group designed and constructed the large liquid argon test Dewar used in the SLD project. The Dewar was used to test the prototype calorimeters as well as the subsequent production modules. We will scale this design up to the size required for the SSC LAr Subsystem tests(see Fig. 2.2.1). The SSC Dewar is about the same length as the SLD Dewar but it is about 50% larger in diameter. The concept of loading the calorimeter modules on a table and rolling them into the Dewar as done for the SLD will be utilized in this design. This limits the required crane capacity to under 10 tons.

The cold feedthroughs used in the MKII, the SLD test Dewar as well as the SLD are quite adequate for the SSC tests. Hence these well tested feedthroughs will be used in the design. Two adjacent pins, one for ground and one for signal, will be used for each channel. This will keep the line inductance within acceptable limits.

The UW shop has skilled machinists to carry out the machining and welding for the Dewar. These skilled positions are highly subsidized by the State and hence the fabrication costs can be kept very low. The UW shop also possesses the large boring mill required

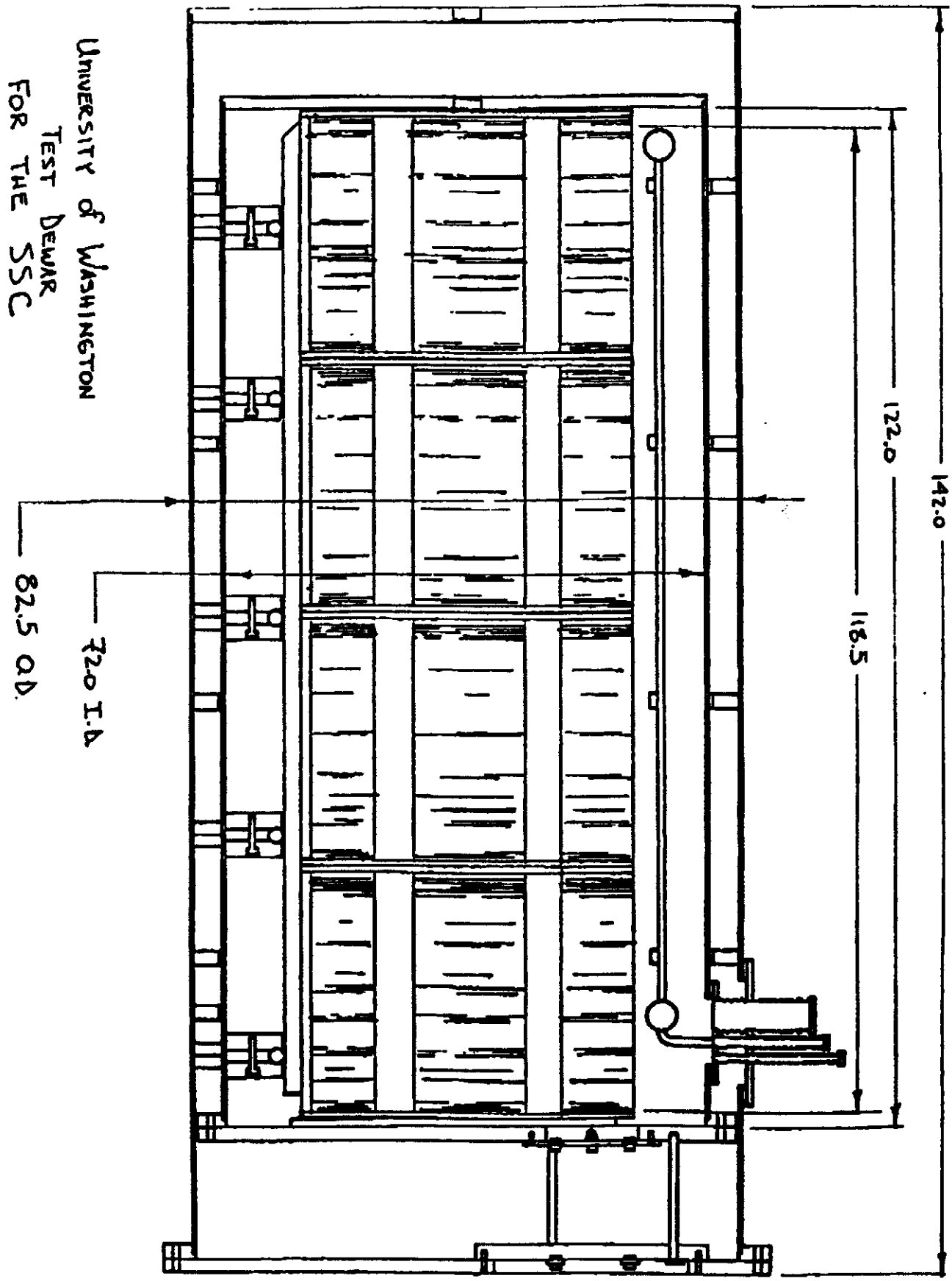
UNIVERSITY of WASHINGTON
TEST DEWAR
FOR THE SSC
142.0
122.0
118.5
82.5 O.D.
72.0 I.D.

Figure 2.2.1

to turn the big flanges. We expect that the design and construction will take about four months following receipt of funding.

2.3. Data Acquisition - Maryland

The data acquisition system for the initial part of the beam tests will be a conventional system using a MicroVax 3400 as computer and running an existing Data Acquisition program such as VAXMULTI from Fermilab. This part of the R&D work will be focused on studying the various stack designs and front-end electronics.

2.4. Test Beam - BNL

The first stack (Pb), associated electronics, cryostat and cryogenics will be complete by October 1990, or one year after the start of funding; this will be at the tail end of the Fermilab fixed target running until 1992. Thus it is crucial to perform the beam tests at BNL. Also, the beams from the AGS are in the right range (0.5 - 20GeV/c) to measure e/π. The beam must be capable of providing and tagging both e's and $\pi's$ or p's. The electron momentum need not span the entire momentum range. To test the high rate capability of the device, we require the intensity at some momentum to be $\geq 10^7/sec$. The floor space required in the beam line area is $\approx 6 \times 6m^2$. See Appendix 1 for the possibilities for beams at BNL. We also intend to test stacks at Fermilab energies to measure the constant term in the resolution.

Chapter 3.
Prototype SSC Designs

Given the high design luminosity at the SSC, one can expect on the average $\approx$1.5 interactions for each beam bucket. The buckets are separated by 16 nsec, and thus nearly every interesting event will have at least one other interaction occurring 16 nsec earlier or later. The readout system should be able to separate these from the event of interest. Of course, no timing device will separate two events occurring during the same bucket. Actually, one should distinguish between three different timing accuracies, each of which affects the calorimeter performance:

1. "Timing": The accuracy to which one can determine when the incident particle arrived. This time has to be a fraction of the SSC repetition rate of 16 nsec, and the design value should be $\lesssim$ 5 nsec.
2. "Integration time": The time interval over which the signal is averaged or integrated. It seems that no calorimeter will be able to have an integration time of 16 nsec or less without a serious degradation in hadron resolution(it takes some 30 nsec for the hadron energy to be completely dissipated and converted into light in a scintillation calorimeter).
3. "Pulse separation time": The time interval during which energy deposited in the same channel by a previous event will affect the event being read out. Typically this time is 3-5 times the integration time. The exact value required for a successful calorimeter is a strong function of its segmentation, the acceptable "background noise" as well as the exact readout scheme.

In a LAr calorimeter, the drift velocity of 5 mm/μ sec implies that with reasonable readout gaps of 2 mm one cannot collect all the charge in less than 0.4 μ sec. However, assuming an even distribution of the generated ionization in the gap, one can collect 44% of the charge in 100 nsec, and about 23% in 50 nsec. The "signal" thus is reduced if the integration time is shortened; this can be accepted particularly at high energies where the total collected charge is appreciable.

The detector capacitance presents a more serious obstacle. If one wants to obtain a charge measurement in 50 nsec, one needs to transfer the charge from the detector capacitance to the amplifier in less than 50 nsec. Since the typical capacitance of a hadronic tower ($\Delta\eta\Delta\phi = 0.04$, thickness= 2λ) is 4 - 6 nF, one needs an amplifier with a very low input impedance of a few ohms.

Charge integrating amplifiers with such low input impedance are difficult to build, and they have a high power dissipation. One thus has to create a larger effective impedance either by using a step-up ferrite transformer (magnetic transformers) or by electrically connecting several gaps in series (electrostatic transformer). We plan to investigate both of these schemes; each has its own advantages and problems.

3.1. Local preamps and module design to work up to 0.5 T - BNL, Rochester, Fermilab

Preamplifiers and Field-Effect Transistor Development

Charge preamplifiers for liquid argon ionization chamber calorimeters must have a low noise, a short response time and a low power dissipation. In addition, their apparent input resistance created by the feedback should be within a certain range to provide an aperiodic transfer of charge in the presence of inductance in the connections between the ionization chamber and the preamplifier. One of the most difficult requirements is a very large dynamic range. In the electromagnetic part of the calorimeter, the dynamic range will be at least 2×10^4 and may be as high as 10^5. Charge signals in the range of 200-400 picocoulombs may appear in one EM channel for 5 TeV electrons. A linear response over a large dynamic range requires certain currents and voltages resulting in a high power dissipation. Matching of the detector capacitance (for noise optimization) by increasing the size of the input transistor, rather than by a transformer, results also in a higher power dissipation. It appears that a power dissipation in the range between 75 and 200 mW is necessary, depending on the type of capacitance matching. The preamplifiers will have to be located at the detector electrodes. Any remote location of the preamplifiers would result in significant increases in the noise and the charge transfer time. Location at the electrodes requires a minimum power dissipation and a high resistance to the radiation in the calorimeter. For liquid argon, the preamplifiers should be able to operate immersed in the liquid.

The input amplifying device should have the device time constant C_{FET}/g_m as short as possible (< 0.5 nsec), the equivalent series noise resistance should be close to the theoretical value $\approx 2/3g_m$, and the parallel shot noise should be negligible. Present junction field-effect transistors are the only type of device that satisfy all these requirements. However, their optimum operating temperature range, with respect to noise, is $120° \text{ K} < T < 300°$ K. Development of devices which could operate at approx. 90° K (directly in liquid argon) will be pursued in collaboration with industry (INTERFET, Corp.).

Preamplifier circuits will be explored and developed with a particular goal to minimize power dissipation. The question of monolithic versus hybrid technology will be thoroughly explored. A process with dielectrically insulated transistors will be explored first.

Preamplifier hybrid circuits, with JFETs developed for the HELIOS uranium- liquid argon calorimeter, have been irradiated with ^{60}Co gamma rays (both at room temperature and at 77° K). So far, at a total dose of 5 Mrads, no increase in the noise JFETs made by INTERFET has been observed. This study will be continued as a most crucial part of the program on calorimeter electronics. Preamplifier circuit and JFET studies are already a subject of a generic R&D project, and they should remain so. Funding is requested as a part of the subsystem project on Front End Electronics for the work performed by industry on the development of JFETs and monolithic amplifiers with JFETs.

3.1.1 Cooling the Preamps in situ - Fermilab, LBL, KEK, BNL, MMA

Given the 70-200 mW/preamp power dissipation and a channel count of ca. 100,000/calorimeter, the total heat load/calorimeter is 7.5-20 kW. The specification of the cooling solution is a zero bubble count in the body of the calorimeter. One and two phase, and natural and forced convection, solutions in both LAr and LN_2 will be considered[5]. The

details of electronic packaging will be coordinated with the cooling solution and the use of LAr compatible insulation materials to effect a system solution. The cooling solution will be integrated into final phases of the module testing program as a large scale proof of principle. We are exploring getting help in this area with industrial partners. KEK will try to do a computer simulation of the heat flow.

3.1.2 Electrodes Structure and Magnetic Transformers - BNL, Rochester

If magnetic transformers are used, one has to take great care to minimize inductances, so that the accumulated charge can be brought out in a few tens of nsec. Up to the transformer, impedances are of the order of a few ohms, and great care has to be taken to minimize stray inductances. From the transformer to the charge sensitive amplifier the apparent detector capacitance is reduced by a factor N^2 (N=transformer secondary/primary ratio) and the typical impedances are of the order of a few hundred ohms. The charge integrating preamplifiers have to be near the electrodes (inside the liquid argon).

The Helios experiment provides an existence proof that such a fast readout of a LAr calorimeter with "cold" preamplifiers is possible. However, its readout units are strips which extend to the edge of the detector, and so all connections, transformers, amplifiers, etc., can be at the side of the module where there is plenty of space. In a 4π calorimeter the gaps between the modules should be minimized and the amplifiers have to be behind the calorimeter modules (or possibly in front). One has to design–and build prototypes of–a readout scheme for a pad structure which satisfies the conditions that

(i) it has a low impedance of a few ohms;
(ii) it takes up a minimum of space;
(iii) it can be mass produced reliably and at reasonable cost.

At this stage it is too early to decide how to arrange the whole stack of absorber, pads, LAr, etc., of a single tower; we assume for the moment an average tower size of $\Delta\eta\Delta\phi = 0.03 \times 0.03$, and a LAr gap size of 2.0 mm. If uranium is used, there are likely to be 2 such gaps for each 4 mm uranium layer, with the readout pads being G-10. If lead is to be used, a reasonable arrangement is a single 2.0 mm gap for each 6 mm of absorber material. Since we cannot yet know which system is the best, we have to study the readout scheme in a way which will accommodate all these options. Indeed, it may well be that the electrical characteristics will make one scheme preferable to another.

The group plans to start by building room temperature table-top "models" of several fundamental types of towers, designing and testing the readout characteristics. The "ionization current" in such a setup can be simulated by a photodiode triggered by a laser. Except for the temperature, such a model should be an exact replica of a section of the actual detector.

In order to illustrate what problems one has to study, consider just two schemes of a detector arrangement, both using "absorbing pads" so that the absorber is alternately a solid sheet and a structure of pads–one for each readout tower. Scheme (Fig. 3.1.1) is a "coupling capacitor scheme," while Scheme II (Fig. 3.1.1) is a "blocking capacitor" scheme. The equivalent circuits in each figure do not show any lead inductances and stray capacitances, although it is exactly their effects we need to study. In both cases the H.V. plane would consist of individual copper (clad on G-10) squares connected by decoupling resistors.

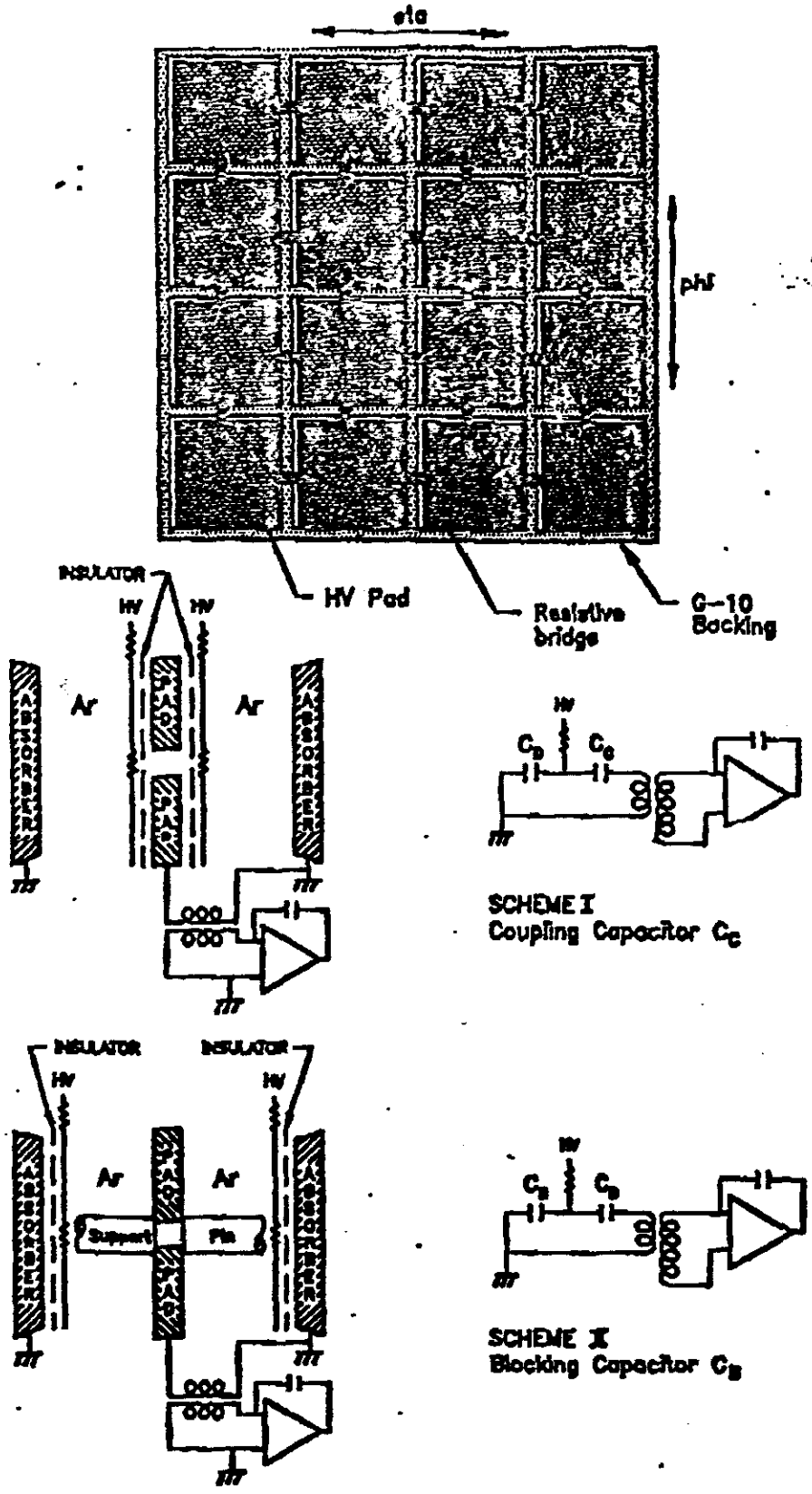

Figure 3.1.1: Tiles

Each scheme has its advantages and problems. Scheme I allows the absorbing pads to be held by the large H.V. plane. Scheme II allows a lower H.V. decoupling resistor, thus reducing sensitivity to DC currents. Both systems require a different solution to reading out the signal with a minimum of lead inductance.

Ferrite transformers saturate and become useless in a magnetic field (> 0.03 T). Thus one also has to investigate whether and how one can shield the transformers against a field of 2T. The Rochester/BNL group has started to study and test a multiple shielding system using the "Russian Boxes" principle. These studies have to be continued in great detail, since the whole system of "cold transformer/preamp" hinges on the possibility of using it in the presence of a magnetic field.

Even with cold preamplifiers in the LAr one requires signal feedthrus which match the output impedance of the preamplifiers. Some 1.6×10^5 50Ω or 100Ω signals will have to be led out of the LAr into room temperature lines for the central detector alone. Let us assume for the moment that these signals are to be fed 2000 at a time through a 17-cm inside diameter tube as described in the Martin-Marietta design study.* [6] The number of channels will have to increase from the number assumed in the Martin-Marietta design.

Can one build all these feedthroughs without one of them leaking? Can one protect against small leaks of LAr? Can one really reliably feed 2000 signals through such a small opening and keep the cable impedance constant and any reflections at the feedthrus themselves to a minimum? Can one use cold feedthrus (like SLDs) or does one have to use warm feedthrus–massing them all near the top of the cryostat? Can one keep the heat leaks sufficiently low so that there is no water condensation at the warm end? Can one eliminate crosstalk–should one connect all grounds together in the feedthru, thus connecting the grounds of 2000 very fast amplifiers and possibly creating massive oscillation problems? We believe that we have a solution to all of these problems, but accept the need for an existence proof by actually designing and constructing such a feedthru in detail.

We propose to do a design study first and then to actually construct a prototype feedthru tube to make sure that we understand the problem. We would then probably use such a feedthru on the actual test cryostat. We note here that we will need cooperation from industry in the design and manufacture of the actual feedthrus.

Table 6.10.1 gives the estimated manpower needs and projected costs.

3.2. Alternatives to the Helios Readout design - LBL

Readout of liquid ionization detectors in regions of high magnetic field may be problematic for the Helios-inspired readout design mentioned in part 3.1. Alternatives to magnetic-transformer readout will be studied in case the investigations under part 3.1 do not yield an acceptable design for readout in the presence of field. A promising technique to achieve such a readout has been advocated by the WALIC collaboration[7] for readout of their warm liquid calorimeter. This technique employs a series connection of the calorimeter plates instead of the usual parallel ganging. Because of the similarity of the electrical

* We disregard here for the moment that with the proposed $\Delta\eta\Delta\phi = 0.04 \times 0.04$ transverse segmentation, with only two depth segmentations, the capacitance/channel may well be prohibitive.

their warm liquid calorimeter. This technique employs a series connection of the calorimeter plates instead of the usual parallel ganging. Because of the similarity of the electrical effect on the circuit of the series plate connection with the magnetic transformer, this technique is dubbed the 'electrostatic transformer'.

As for the Helios-inspired design, a number of issues relevant to the electostatic transformer need to be studied to see if the required S/N, time resolution, etc. can be achieved with such a design. The electronic design issues relevant for the S/N and time response of the device are closely coupled to the mechanical design of the stack. We propose a series of tests with prototype stacks constructed first in air, and, later, in liquid argon, to investigate the merits of the electrostatic transformer approach.

The first series of tests in air will measure the S/N as a function of gap size for various plate thicknesses, and the cross talk and stray capacitance as a function of gap size, tower spacing, etc. by means of charge injection directly onto the stack structure.

After study of the basic stack properties, the optimum method for coupling the signal out of the tower into the preamp must be studied, followed by a systematic study of the effect on signal and cross talk of the preamp input impedance with the chosen method of connection. We expect to iterate these investigations a few times to find the design with the best performance.

An important tool in this study will be the modelling of the stack behavior via simulation programs such as SPICE.

The basic tests here require the injection of a known charge onto various configurations of models of the stack geometry. This will require a pulser system with large signal output and low capacitance; as for the magnetic transformer case above, an optical device to inject charge will also be required to establish that the pulse and signal characteristics are fully understood.

These tests will require the support of a technician for assembly, an EE for consultation, a set of high speed, low noise, low impedance, preamps which can be calibrated, and various materials and fabricated parts. These studies are envisioned to be concluded within 1/2 year after funding commences. The goal to be achieved is the observation of a suitably fast (< 100 nsec) readout of injected charge onto an n=5 series-coupled stack with satisfactory stray capacitance.

While it is premature to guess the results of these tests, one consequence that may become apparent is the need for development of a cable of suitably small capacitance. This could be part of the research task for the 2nd year of this proposal.

Once the basic 'signal' properties of the stack have been studied, the best method must be found to distribute HV to the stack. The issues to be studied about HV connection include construction of integral blocking capacitors, preamp protection from HV breakdown, insulation of support rods and spacers if necessary, etc.

The standard range of HV operating in a LAr system is 1-2 kV/mm,with the notions that neither impurity effects nor drift velocity saturation are appreciably helped by higher fields. However higher E fields will most definitely mitigate the signal saturation of densely ionizing tracks, providing another tool aimed at equalizing the electron/hadron response in LAr (particularly with hydrogenous laminants or dopants).

We therefore propose studies of higher voltage (5-15 kV) cables, capacitors, connectors, feedthroughs, etc., in a small test dewar, to establish practical working limits, as well as possible follow-on development efforts. The dewar and parts will require some ME design,

There are further design studies to be pursued as well. In particular the electrostatic transformer may be designed so that the HV is distributed either in series (as in the signal electrode ganging) or in parallel (more typical in LAr applications). With ME and EE assistance, the goal is to fabricate an entire section of the HV system, from supply to stack, within one year. (This work will require technician support and pc fabrication as well.)

Once the basic signal and HV properties of the stack are understood, the mechanical layout for tile support, projective geometry, tile shapes, tie-rods, etc. must be reviewed to be sure that the design is 'constructable'.

Starting from comparative design studies of a few of the most modern calorimeter designs (D0, SLD, Helios), we will design the mechanical stack. This effort will take one year and require an ME, an EE and a designer. Under consideration will be design questions for the feedthroughs, signal connections, cable, tolerances, materials, surface treatment, ground paths, etc. These tasks are viewed as the prelude to the design of a full-fledged SSC module (see 3.3.8 below).

Upon completion of the program of tests in air outlined above, the expectations for the performance of the stack will be verified via a beam test of a 20 X_0 deep piece of the prototype stack. The purpose of this test is to verify in liquid, with real showers, that the expect S/N, cross talk, and time resolution for a series ganged module are indeed achieved. Since electromagnetic showers are contained in a module, the energy scale and proof of principle will be established with it; the e/h issues already addressed in chapter II will not be studied here.

However, if desired, the hadronic response as a function of various dopants in the liquid could be investigated with this test module. We have not yet determined in which beam to perform this test.

The program of study of the electrostatic transformer option outlined above is expected to require about 1.5-2 years to complete.

3.3. Common issues

3.3.1 Tile Development - Michigan State

There are two basic readout schemes that can be used in a liquid argon sampling device: directly and capacitively coupled collection of the charge. These schemes are schematically sketched in Fig. 3.1.1 and called Scheme I and Scheme II. In one case the charge collecting device is directly coupled to the liquid (II) and in the other case it is capacitively coupled (I).

Generally in both cases rectangular pads are used to segment the calorimeter in η and ϕ. In Scheme I pads are sandwiched between two layers of an insulating material , typically G10 with a resistive layer on the outside of the sandwich. In this case the pads can vary in thickness from 25μm to a few millimeters. In the charge collection system of the D0 experiment the pads are 25μm copper. Pad patterns including traces for signal transport are machined into Cu-clad G10 . This is a proven technology and could be relatively easy transported to the SSC without much R&D. A very attractive alternative to this is the case where the pad has a finite thickness (few millimeters) and the readout contributes to the absorber medium. The pad material can either the same as the absorber sheets or different. In this case tiles (Cu,Pb or U) are laminated between a thin insulator (example

0.5mm G10) and wires are needed to make the signal accessible. An advantage of this scheme is that tiles do not have to be individually held, but they come essentially as a sheet which is mechanically very strong. For this technique, lamination materials and procedures, connections and limitations by electronics requirements have to investigated. The HV distribution plane on the outside of the sandwich can be a uniform coating (like D0), which requires a resistance of several 10's of MΩ per square. The alternative would be Cu pads (etched or machined), identical to the internal pad structure and connected by high resistance bridges as indicated in Fig. 3.1.1. A uniform resistive coat layer has been used in HELIOS and D0, but resistive bridges have not been used in liquid argon before. Both possibilities would initially be investigated as a possible scheme for a SSC detector. The alternate readout (Scheme II) has tiles directly coupled to the liquid and this technique is employed in the SLD detector. The only difference between SLD and the sketched configuration in Fig. 3.1.1 is that SLD uses discrete capacitors and not a built in distributed blocking capacitor. Here the problems are more of of a mechanical nature, namely how to hold the tiles in place. Again constraints due to electronics (length of wire,location of preamps, etc) have to be considered as well. The creation of a distributed capacitor system on the face of the absorber sheet poses similar R & D questions as in the case where tiles are laminated, although the fact that two sheets of materials with different thermal expansion coefficients are joined might cause some unforeseen problems. We plan to investigate all these possibilities up to the point where we are able to make a decision which will either be based on technical feasibility of some of the choices or other external requirements arising from the desired performance of the device.

3.3.2 Radiation Hardness Testing - Florida State, BNL

The tracking region and parts of the calorimeter of an SSC detector will be subject to very high radiation levels of more than 1 Mrad per year. All components must withstand at least 10 Mrad without loss of integrity.

Florida State University has a 3 MeV electron accelerator that has a beam of approximately 2 cm in diameter. The beam intensity can be varied from 1 nanoamp to 1 milliamp. For materials which are not too thick, such as no more than 1.5 g cm^{-2}, this accelerator can give a radiation dose of 1 Mrad from less than a minute to many hours. This facility is available for radiation damage studies. Samples can also be moved in a scan mode allowing material up to 30 cm long to be radiated. Measurements performed during the past year have shown that for plastic and scintillators, radiation damage by this electron accelerator and exposures of the same type material to a gamma source of ^{60}Co are identical. The advantage of the electron accelerator is that material can be exposed to radiation over a much shorter length of time.

We propose to utilize this facility for radiation hardness testing of all components of the calorimeter, particularly those positioned inside the calorimeter itself where the dose from electromagnetic showers is highest (such as glues, signal boards, plastic spacers, etc.). For those components more susceptible to damage from neutrons (integrated circuits will be tested as part of the Subsystem Proposal on Front End Electronics) a separate program of testing may be necessary, perhaps carried out at Brookhaven National Laboratory.

3.3.3 Lead and Uranium Absorber - FSU, BNL

A. Lead

We have developed some expertise in handling and machining lead in connection with previous calorimeter projects (e.g. the SLD lead-liquid argon calorimeter, and various others). For the test stack absorber we propose to use a similar lead alloy to that employed by SLD, namely 613 lead alloy with 0.06% calcium and 1.3% tin. This has acceptable mechanical strength (8,000 psi), flatness and straightness. The cost, if bought in large quantities (tens of tons), is about $2 per pound rolled, cut and finished. We have good contacts with the commercial vendor who supplied this material for SLD (the Doe Run Company of Herculaneum, MO) and have obtained and tested samples of the 613 alloy. We also propose to continue to investigate other lead alloys which may prove better suited for use in a final SSC design (having higher strength, for example).

B. Uranium

We also plan to coordinate with the DOE, Don Reeder and our colleagues in the Soviet Union in an effort to ascertain whether enough uranium can be available for an SSC detector and at what price.

3.3.4 Simulation Issues - Mississippi, LBL, FSU, Iowa State, ORNL, Tennessee

We do not propose to duplicate the large effort which is already underway in the simulation and Monte Carlo study of SSC physics. Nevertheless there are some simulation issues which we feel we must address independently given their important impact on aspects of our design.

Firstly, many of the "requirements" listed in Table 1.1 are based on approximate studies, guesses and incomplete surveys of possible physics processes. Therefore we feel we need to be sure that we understand how good a calorimeter resolution is required, how close to compensating ($e/\pi = 1$) the calorimeter must be, how linear the response must be, and how much noise, including pileup, can be tolerated. These answers are needed so that we can make a balanced decision as to whether test stack beam data attain an adequate performance level. We will address these questions (in collaboration with other groups interested in simulation of SSC physics) at KEK, LBL, Iowa State and SCRI(Florida State). We will be concerned with the calorimeter performance necessary to search for a variety of new physics, such as the top quark, the Higgs boson, supersymmetry, new W' and Z' gauge bosons, fourth generation and compositeness. We will also aim to measure missing transverse energy at the fundamental limit set by the production of neutrinos from light quarks in jets.

Secondly, we will undertake an effort to use the "micro-simulation" code of the FLUKA and CALOR programs to understand, at the nuclear physics level, details of the response of our test stacks. We aim to be able to predict in detail the e/π and resolution that would be obtained for any given stack geometry, given some beam test data to fix certain constants which are as yet uncertain (such as the saturation properties of ionization in the liquid argon). The effects of laminants and dopants in the LAr will also be studied. This work will be carried out by LBL, Mississippi, ORNL and Tennessee.

Finally, there are what may be termed "design questions" pertaining to a full 4π SSC calorimeter. We will need to study how deep the calorimeter need be, and how

the depth should increase with rapidity (if the depth is too little, the resolution will be degraded by fluctuations in the unmeasured energy); how to design inhomogeneities in the calorimeter such as cryostat walls, supports, beam holes etc. in such a way as not to have a deleterious effect on performance; how to incorporate a coil with the calorimeter, and how to minimize cracks between modules. Again, this work will be done by LBL and FSU and will use some of the tools and experience developed in addressing such hermeticity issues at Martin-Marietta.

3.3.5 Brite Pads - Washington

BRITE PADS[8] is the name given to a new type of tower construction. The development and testing of this new structure is being funded by a generic grant. Assuming the details of this design can be perfected, BRITE PADS would offer the following advantages for an LAr calorimeter.

1. Reduce the channel requirements in the electromagnetic sector by a factor of three while improving the shower position resolution and the two shower separability.
2. These eliminated channels could be used in the hadronic sector to increase the channel count by a factor of ten compared to the SDE Berkeley Design.
3. The BRITE PAD structure provides a very robust system against channel loss or tower shorts.

A potentially serious problem for the hadronic sector of the LAr calorimeter is the very large capacitance load per readout channel. In the standard tower structure this would amount to about 40 nF per tower in an eight absorption length (proton) hadronic sector. If this were divided into two depth segments and read out with two channels, the input load per channel would be 20nF. If no magnetic fields were used, this large input capacitance could be handled using transformers. Another technique that is being investigated for use with magnetic fields is the electrostatic transformer approach. Adopting the BRITE PAD approach would reduce this capacitance load by a factor of ten. Perhaps the electrostatic transformer approach incorporated into BRITE PADS would enable the load capacitance to be nearly matched to the amplifier input capacitance.

Should the BRITE PAD approach be shown to be attractive, then we would construct a test calorimeter using them. This would be another "stack" to be tested at BNL and FNAL in the test dewar.

3.3.6 Alternative Pad Structures - Arizona

While straightforward extensions of present electrode designs will likely provide the required preformance, less explored geometries might offer important improvements. Fig. 3.3.1 is a schematic showing the conventional heavy metal absorber plates (not tiles) separated by the canonical 2 mm with liquid argon as the ionizing medium. We would like to try pads of the following sort. It might be possible to intersperse some number N (an odd number) of metalized plastic sheets within the gap. The metalization on every other layer would be etched (or deposited) in pad geometries. The plastic sheets might be stretched with spacers at the pad edges. Such a scheme has several advantages. 1) The time to drift out the charge is reduced by a factor $N+1$ if the electric field is kept constant. If the electric field alternates between subgaps, then the voltage is lower by the

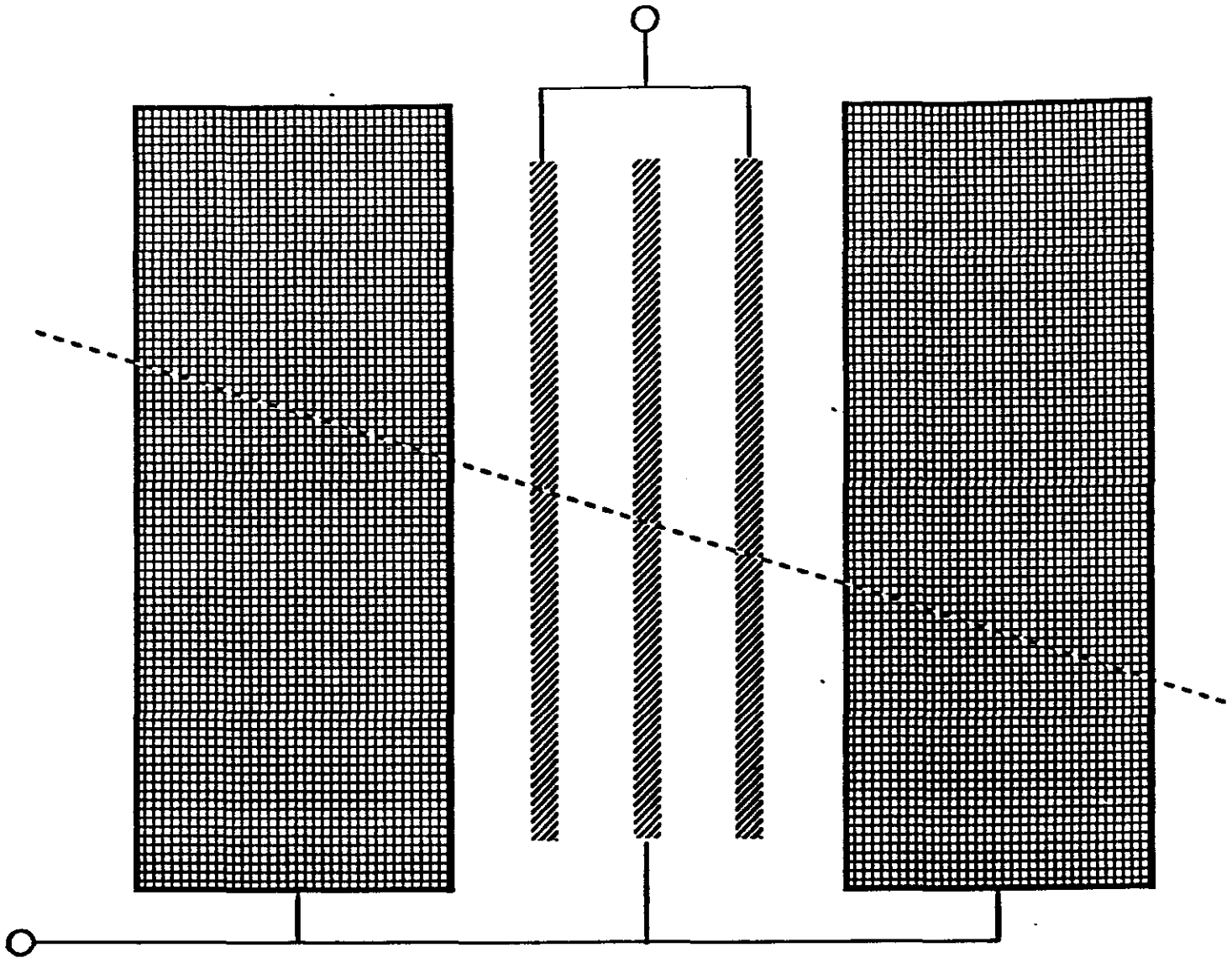

Figure 3.3.1:

same factor $N+1$. 2) The protons in the plastic might provide some compensation. The metalized layer and the plastic sheets must be kept as thin as possible since the range of a knock-on proton from a slow neutron in an hadronic shower is very short. Also Burke's constant for heavily ionizing protons in liquid argon is not known so the improvement is difficult to estimated.

Several problems must be addressed with such a design. If the conventional parallel readout is employed, then the effective detector capacitance for the same tower size is increased by a factor $(N+1)^2$. This slows the readout to a practical charge preamp and increases the electronic noise dramatically. However there are several schemes that might keep the signal-to-noise ratio the same as with the conventional 2mm gap design and the detector capacitance within bounds. These include combinations of series/parallel connections and parallel input - series output connected coupling transformers. Other problems that we plan to address include 1) maintaining accurate separation of the narrower subgaps, 2) liquid argon flow and bubbling in the subgaps, 3) radiation damage sensitivity of the plastic sheets, and 4) connections to the readout electronics.

3.3.7 Interaction Between the Detector Subsystems R&D on Liquid Argon Calorimeter and on Front End Electronics

This project on Research and Development of a Liquid Argon Calorimeter for the SSC will rely upon and interact closely with the project on Detector Front End Electronics (by BNL, LBL, Univ. Penn., Harvard Univ., and others).

The electronics for the absorber tests will be implemented as a part of this project. It will be based largely on the HELIOS design.

In many respects, the electronics for an SSC calorimeter will be different (e.g., sampling at 16 nsec intervals, analog storage, pulse shaping by a sum of weighed samples, trigger requirements, large scale implementation, etc.). The development of this electronics will be done in close collaboration with this project.

The communications between these two projects will be strengthened by the participation of two institutions (BNL,LBL) with several investigators in both projects.

3.3.8 Design of a full sized-module

After about 1.5 years of investigation, outlined in A and B above, a 'best' stack configuration will be chosen, and a full sized module design made. Several general mechanical options for the internal stack design will be studied in advance of the final choice for 'best' stack to better understand the trade-offs for various design choices. Tradeoffs in existing designs provide some guidance as to what we can expect:

There are two basic constructions that have been used to segment the calorimeter's signal collecting plane in ϕ and θ: pads and tiles. Pads (as used in $D\emptyset$) typically are either etched or machined onto printed circuit material with etched or machined traces used to carry signals out to the perimeter of the local module, usually on an inner layer of a multilayer printed circuit board. The material used in the signal layer does not contribute significantly to the depth in absorption lengths of the calorimeter. Signal layers using tiles of the radiator material (lead in SLD) do contribute to the absorption length of the calorimeter in direct proportion to their thickness. However, tiled signal layers present problems in locating signal leads to carry signals from inner tiles to the perimeter of the

local module. In SLD, for example, modules are only four tiles wide, requiring signal leads from inner tiles to be brought past only one row of tiles to reach the perimeter of the module.

For a calorimeter 10 proton absorption lengths deep using 8mm thick lead radiator plates and tiles, the total calorimeter depth is 2.14m; while using 4mm circuit board signal layers instead of the tiles, the total calorimeter depth is 2.94m. This difference in calorimeter thickness increases the calorimeter weight by 750 tonnes, or 18%, and also increases the inner radius of all the subsystems located outside the calorimeter.

Calorimeter segmentation is finest in the electromagnetic section. For the *DØ* endcap electromagnetic section, $\Delta\phi$ ranged from $\pi/64$ to $\pi/16$. Our present SSC calorimeter designs show similar segmentation which works out as modules 4-5 tiles wide in the hadronic sections, but with twice that number in EM sections. Connecting tiles into towers by tie rods and then connecting the tie rods to signal leads will be looked at during the calorimeter design.

Using tiles typically requires the high voltage to be applied to the tiles, thereby generating signals at high voltage and requiring blocking capacitors in the signal circuitry. Printed circuit signal planes in the *DØ* calorimeter have high voltage surfaces insulated from the signal pads, allowing the signal circuitry to be at ground potential.

Mechanical considerations such as these must be taken into account before a 'final' choice of internal stack design is made, so that the overall cost of the detector can be minimized. Other such issues are sure to arise during the stack studies outlined in parts A and B, and during the actual mechanical design process itself.

3.3.9 Industrialization

As design for the LAr calorimeter moves closer to level of reality encompassed by a full engineering study, the important questions of tooling, assembly techniques, reliability, testing during and following assembly, etc., will assume major importance. In the 2nd year of this Proposal we will need to start the interactions with industry concerning these issues, so that the design that starts in that year will incorporate from the beginning these crucial considerations.

Chapter 4.
Summary of Costs, Manpower, and Milestones

Institution	FTE Senior Physicists	FTE Junior Physicists	FY1990 Funds
Arizona	1	0	$39,900
BNL	3	1	1,328,580
CalTech			
Fermilab	.1		
FSU	0.25		88,330
Iowa State	.25	1	40,000
KEK	.1	1	
LBL	2	1	819,613
Maryland	1		115,000
MSU	0.1	1	155,000
Mississippi	0.2	0.8	118,460
ORNL	0.1		81,600
Rochester	0.5	1	267,930
SLAC			
Tennessee	0.5		
Tokyo Inst. Tech.	0.1		
Washington	1	2	195,000
Totals	11	9	$3,249,413

4.1. Milestones

If we receive the full funding requested above we have the following milestones. Any reduction in funding will mean that we can not carry out these goals in a timely manner.

From Start of Funding

0.5 years	Test of Table Top models of electrode structures to measure signal propagation, crosstalk, etc.
0.5 years	Similar tests of Electrostatic Transformer Approach
1 year	Measure e/π in lead liquid argon stack at AGS
1 year	Demonstrate effective cooling of preamps in argon
1.5 years	Test alternate stacks in beam
2 years	Design real module for SSC

References

1. W. J. Willis and V. Radeka, Nucl. Instrum. Methods **120**, 221, (1974).
2. M. Abolins et al., Nucl. Instrum. Methods A280,36(1989).
3. I. Stumer, private communication.

4. R. Dubois et al., IEEE Trans. Nucl. Sci. 33,#1, 194(1986).
5. SSC Generic Detector R&D Proposal, Liquid Argon Calorimeter, Cryogenic Solutions for Large Electronic Heat Loads, G. T. Mulholland, Fermilab, May 31, 1989.
6. I. Adams et al., Submitted to the SSC Workshop on Calorimetry, Tuscolusa, Alabama.
7. J. Colas et al., Submitted to the 1989 SSC Workshop on Calorimetry, Tuscaloosa, Alabama.
8. P. M. Mockett, A Novel Segmentation for Charge Sampling Calorimeters, to be published in Nuclear Instruments and Methods.

Chapter 5.
Appendix I. AGS Test Beams

Brookhaven National Laboratory

MEMORANDUM

Date: September 15, 1989

To: H. Gordon

From: D. Beavis DB

Subject: *Beam Line for SSC Calorimeter R&D*

There exists several viable options for testing a SSC prototype liquid Argon calorimeter at the AGS for FY91 and FY92. Final selection will require additional refinement of your needed experimental conditions and compatibility with other program obligations.

The EP&S engineers can provide an estimation of the cost to implement your equipment on the AGS floor including power requirements, environmental control, cable trays, and electronics/counting house.

Bob Meier can provide cost estimates for the liquid argon system once he has the initial fill volume and boiling rate. He may already have some of the components necessary for constructing the controls systems. In addition, he believes that it may be easiest to do initial filling with liquid argon, and replacement by condensing gas.

The following beam lines would probably meet your requirements:

A3 Would require modification of last quad doublet and installation of an experimental test area.

The future use of A3 is uncertain. E845 has not made a decision to ask for an extension for FY91 and they will not run in FY90.

This line is an OR with A1.

~ acceptance is ~1000 μSR-%.

B1 No beam line modification required.

E802/E859 has plans which could extend use of the line for heavy ions beyond FY92. Compatibility during SEB is possible, but may be affected by E802 upgrades.

This line is an OR with B5 which presently has E791.

Acceptance is ~ 150 μSR-%.

C5 No beam line modifications required.

E814 may have long-term plans for heavy ion [illegible]ons. Compatibility during SEB may be possible.

This beam line is an OR with the C1 beam line [illegible] expecting to run in FY91 for E850.

Acceptance is ~ 300 μSR-%.

All these beam lines can provide tagging if the user installs the appropriate Cerenkov detectors upstream of the apparatus. Installation of the Cerenkov detectors before the last optics elements are possible but require detailed considerations.

Since you mentioned the B1 beam line, I have used it for a specific example.

Table I gives a qualitative comparison of beam lines.

Table II gives the area classification for the B1 area. Area could be run as class II with the constraint that the beam be contained in an enclosure (beam pipe).

Figure 1 shows a typical secondary tune for E802. Your detector would probably be at Z = 85 meters. Favorable spot size should be achieved by changing the focal distance of the last doublet.

Figure 2 shows the π^- intensity as a function using Sanford-Wang for production estimates, beam line acceptance and assuming 10^{12} proton interactions per spill in the B-target.

I believe that the "best" option would be the installation of a high quality test beam. This might include conversion of A3 or another existing beam line or installation of a new beam line. Naturally, this option is probably the most costly in resources.

I will be happy to help in further refining these considerations if you desire.

pc: D. Lazarus
C. Chasman (E802/B1)
W. Morse (E845/A3)
D. Lissauer (E814/C5)

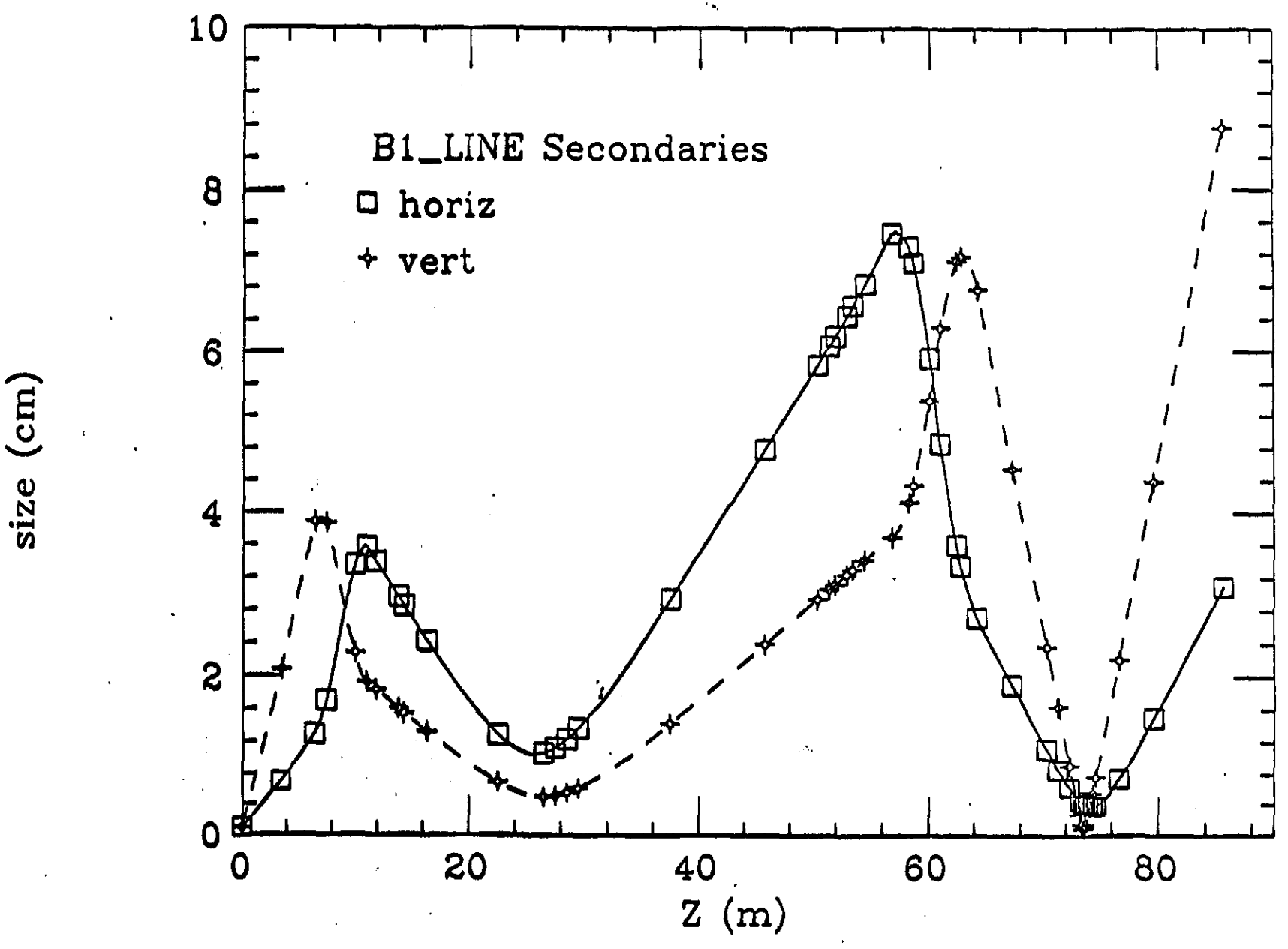
B1_LINE Secondaries
horiz
vert
size (cm)
Z (m)
0
2
4
6
8
10
0
20
40
60
80

Fig 1

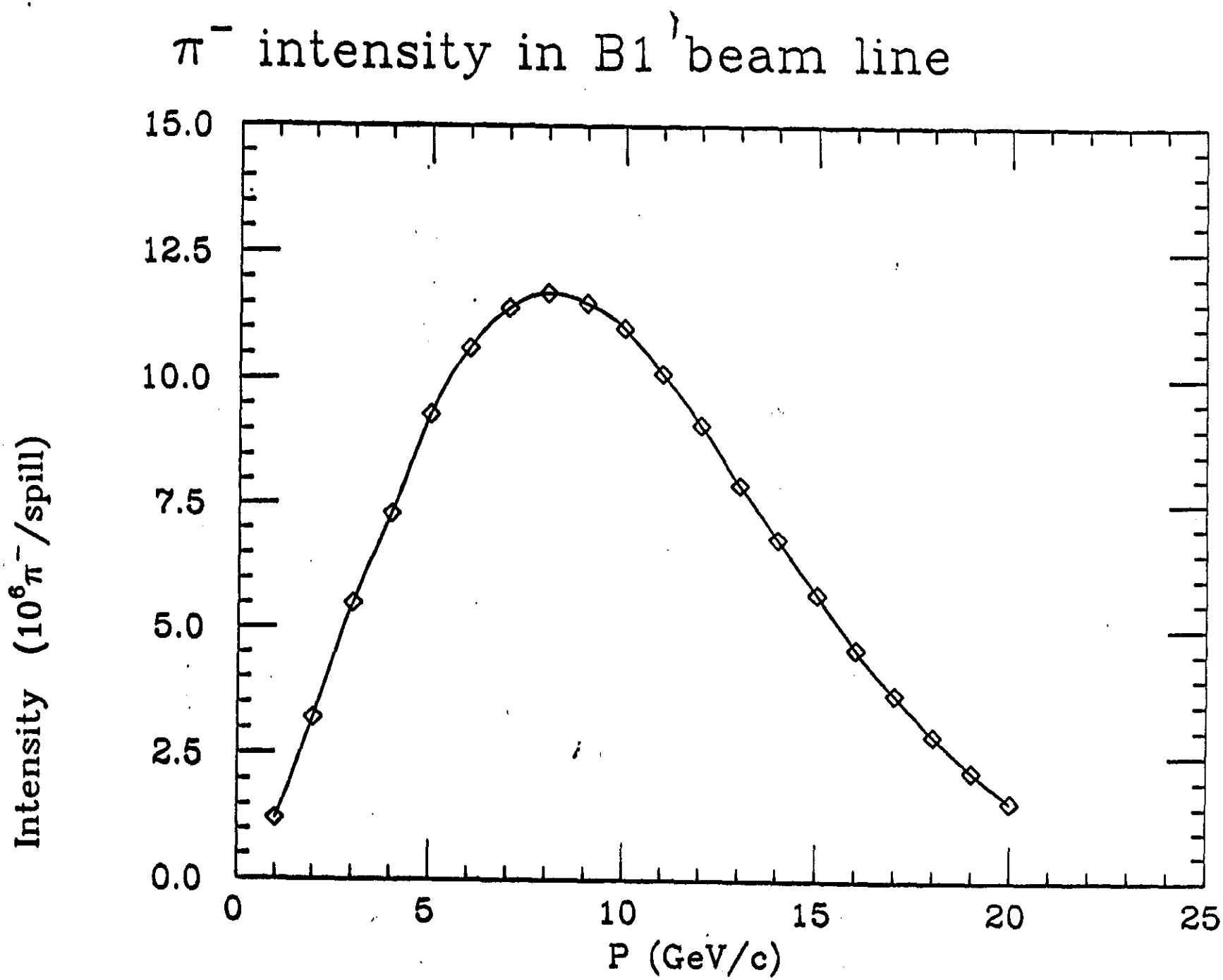
π^- intensity in B1 beam line
Intensity ($10^6\pi^-$/spill)
15.0
12.5
10.0
7.5
5.0
2.5
0.0
0
5
10
15
20
25
P (GeV/c)

Fig. 2

AGS BEAMS (July 26, 1989)

Separated Be.) for General Use

Beam	GeV/c	$\frac{\Delta\Omega}{\Omega}$ (%) (FWHM)	Prod. Angle	Ω (msr)	Flux /10^{12} pr. ns on target: K^+	K^-	p	$\bar{p}$	π^+	π^-	@ GeV/c	Purity	Remarks
B2 B4	1.5-6(K) 1.5-9($\bar{p}$)	5	3°	0.3	2.7×10^5	1.2×10^5	2×10^7	10^5	4×10^7	3×10^7	4	π^-/K^- ~3 $\bar{p}/\pi^-$~3/4	To MPS
C2,C4	< 1.1	4	10.5°	2.6	9×10^4	3.2×10^4	2×10^7	2×10^3	8×10^7	8×10^7	0.75	π^-/K^- ~10	L = 15 m.
C6,C8	< 0.8	6	5°	10.0	3×10^5	1.0×10^5	1.0×10^8	1.4×10^4	6×10^8	6×10^8	0.7	π^-/K^- ~ 5	L = 15 m.
D6,D8	1.0-2.0	6	5°	1.6	1.1×10^6	0.5×10^6	2×10^7	5×10^5	6×10^7	5×10^7	1.8		L = 31m. Under construction in FY 1990.
Unseparated Charged Beams													
A1	5-24	3	0°	0.2						10^6	22		To MPS; L=130m; 25 cm B tgt.
A2	1-10	5	12°	0.3			3×10^6		3×10^6		2		
B1	5-28	3	0°	0.05			3×10^7		6×10^6	2×10^6	14		Primarily heavy ions.
C1	1-24	5	0°	0.8	6×10^6	7×10^5	2×10^8	1.4×10^5	7×10^7	5×10^7	13	μ^-/π^-=0.3	L = 61 m.
C5	1-28	2	0°	0.15			1×10^7				13		L = 81 m.Primarily heavy ions
Neutral Beams								K_L	n				
A3	2-15		2°	0.045				2×10^7	3×10^8		2-15		Alternates with A1; L= 8 m.
B5	2-15		1-4.5°(V)	0.1				5×10^7	3×10^8		2-15		Based on E791 est; l = 10 m.
Muon Channel					μ^+								
D2,D4	.025-.15(μ)	9(π^+) 30(μ)	55°($\pi^\pm$)	24($\pi^\pm$)	2×10^5 10^3 surface						0.20	e^-/μ^- = 8	Not available in FY 1990.
Neutrino Beams					ν	$\bar{\nu}$							
U line					$2\times10^9/m^2$ $10^7/m^2$	$1.4\times10^9/m^2$						1.4×10^{13} ppp typical on target	Fast spill,flux avg over 1.5m radius Wide Band Horn, $\langle E_\nu\rangle$=1.4GeV/c Narrow Band Horn, $\langle E_\nu\rangle$=1.3GeV/c ΔE/E = ±15%

Note that 0° beams lines can be used for polarized protons and/or heavy ion beams.

Table II

B1 Area Radiation Classifications

The radiation class rating associated with various beam intensities is listed below for the B1 experimental area. The following has been used:

I) Relative factor for oxygen/proton is 30.
II) Relative factor for silicon/proton is 140.
II) Relative factor for gold/proton is 9000.
IV) A minimum beam area of 1 cm^2 is used
V) A 3. second cycle rate for the AGS.

Radiation Class	Protons	Particles/spill Oxygen	Silicon	Gold
I	$> 9.0 \times 10^7$	$> 3.0 \times 10^6$	$> 6.4 \times 10^5$	$> 1.0 \times 10^4$
II	$< 9.0 \times 10^7$	$< 3.0 \times 10^6$	$< 6.4 \times 10^5$	$< 1.0 \times 10^4$
III	$< 9.0 \times 10^6$	$< 3.0 \times 10^5$	$< 6.4 \times 10^4$	$< 1000.$
IV	$< 3. \times 10^5$	$< 1.0 \times 10^4$	< 2150	$< 33.$
V	$< 9000.$	$< 300.$	< 65	$< 1.$
VI	$< 150.$	$< 5.$	$< 1.$	$< .016$

Chapter 6.
Appendix II. Budgets

6.1. Arizona - Budget

Operations			
	Prototype Fabrication Supplies	3,000	
	Electronics Parts and Fabrication	2,000	
	Transformer Fabrication thru Industry	5,000	
	Total Operations	**10,000**	
Total Subject to Overhead		10,000	
	Overhead (@ 49%)		**4,900**
Equipment			
	LAr Test Cryostat	25,000	
	Total Equipment	**25,000**	
Total Request		**39,900**	

6.2. BNL - Budget

Table 6.2.1: Costs of Test Beam Calorimeter

		M & S
1.	Pb Stack	64K
2.	Pb/Cladding Stack	64K
3.	U Stack	64K???
4.	Electronics	244K
5.	Fixtures	28K
6.	Cryogenic Controls, storage dewers, liquid argon	80K
7.	Calibration	5K
9.	R & D	20K
10.	Support for test beam work	50K
	TOTAL	$ 555K
	with GNA	$ 813K

Manpower

EDIA	Man Months	Cost/month	Total
Engineer (mechanical)	6	$5140	$30840
Engineer (electronic)	24	$5140	$123360
Engineer (project coordinator)	12	$5140	$61680
Designers	12	$4671	$56052
Totals			$271932
with GNA			$398,380

Fabrication

	Man Months	Cost/month	Total
Technicians	48	$3000	$144000
with GNA			$210,960

	FY 90	$1,328,580
	FY 91	$93,760

6.3. Florida State - Budget

Florida State University's commitment to this project consists of J. Womersley (10% of research time) and V. Hagopian (5%), together with one interested graduate student. We will also make available our mechanical shop facilities, which include mechanical CAD and electrical circuit design systems. We are requesting funds to hire one technician to supervise the radiation hardness studies.

Technician (including fringe benefits)	$ 28,000
Electron accelerator maintenance	5,000
Miscellaneous expenses (including shipping)	10,000
Develop Lead Alloys with vendors	25,000
Travel	5,000
SUB-TOTAL	$73,000
Overhead (21% if funds are through our DOE grant, otherwise 44%), (assume 21%)	15,330
TOTAL FSU REQUEST	$ 88,330

6.4. Iowa State University - Budget

Students and travel costs - (including overhead) $40,000.

6.5. Lawrence Berkeley Laboratory - Budget

Air Tests	$ 17,090
HV Studies in LAr	47,470
SSC Stack Design	65,460
2 λ TM Cryostat	199,270
2 λ Test Module	72,560
O/A Cal Design Interface	95,440
Overhead(47%)	262,053
Total	819,613

6.6. University of Maryland - Budget

The costs for the data acquisition system are as follows:MicroVax 3400, 12MB, RF71, TK70, BA213 $30,000 with discountExabyte 8mm tape system $6000 WREN V (or equivalent) 600MB disk $5000 for a total of $41,000. We are requesting $35,000 for one part-time electrical engineer and part-time of a programer to work on this effort.

6.7. MSU - Budget

4) Budget(MSU):*

1/2 engineer for one year	$40K
1 technician for one year	30K
1/2 tech paid by MSU	
Undergraduates(3 @ $15K/year)	45K
Travel	5K
Mechanical Shop $ 7.50/hour	
	8K
Electronic Shop $10.00/hour	
1 Postdoc	28K
Overhead	29K

* It is also worth mentioning that we have a large cryostat (17″in diameter 48″ deep) completely instrumented as a liquid argon detector, with testcell, electronics, cooling loops etc. It actually has a stack in it now and we have measured muons with it. We also have a license for Uranium and have U plates at MSU (about 200pounds). This is a nice system to actually test cell structures.

6.8. U. of Mississippi - Budget

Post Doc - (with fringe)	$ 36,000
Programmer Support	15,860
Research Assistants (grad and undergrad)	6,000
Travel	8,000
Computer Fee (contribution to central facility)	10,000
Communication	5,000
Total	80,860
Overhead	37,600
Grand total	118,460

6.9. ORNL - Budget

ORNL

(1/2 time programmer including overhead) $ 81,600

6.10. Rochester - Budget

Rochester Manpower and Budget Requirements

Rochester plans to dedicate 25% of F. Lobkowicz, 10% of T. Ferbel and 13% of P. Draper to the project. In addition we plan to hire 1 new postdoc to be dedicated to this project, as well as 1 graduate student and 3-5 undergraduate students.

The SSC completion date lies too far in the future for a graduate student to contemplate as a thesis subject. Instead we plan to have a student work for 2-3 years on SSC LAr development, but then do a thesis on either E706 or *DØ*, which both use LAr calorimetry. Thus the experience gained helps the student during the analysis of physics data taken.

Rochester has a large supply of very smart undergraduates in physics and electrical engineering. These students work 20 hours/week during the academic year and 40 hours/week during the summer. In the past we have used such students for assembly and testing of electronics modules (Camac, Fastbus, etc.) and some even for development. Programming is another area where these students are immediately useful. We plan to use these students in running SPICE simulations, as well as in building and testing tower models.

The new postdoc would be hired specifically to work on the calorimeter tests at BNL (see Section II), as well as to help with the various design and test projects at Rochester.

Rochester has available a 3-man drafting shop and 2-man electronics shop, each one headed by an engineer. We have the capability of doing mechanical CAD work and CAD electronics layouts. We can manufacture 2-layer boards in-house, and have a local vendor with fast turnaround for more completed boards. We also have a machine shop and one technician who could be employed full-time on the project starting December '89. (If the project did not materialize, this technician would have to be laid off.)

Table 6.10.1: Rochester Costs = 1 Year

Salaries and Benefits:	
1 Postdoc	$ 28,350
1 Graduate Student	11,312
3 Undergraduate Students	18,000
Total Salaries	$ 57,662
Benefits (22.8% of $28,350)	6,464
Total Salaries and Benefits	$ 64,126

Equipment and Materials:	
Optical trigger system	$ 4,000
2 Model prototypes	30,000
Measuring equipment	8,000
Total materials and Supplies	$ 44,000

Shop Labor:		
Mechanical drafting/engineering	6 man months =	$ 34,632
Electrical designing/layout	4 man months =	23,088
Machining	2 man months =	11,544
Laboratory Technician (Rate 60% of	8 man months =	27,706
Shop rate)		
Total Shop Costs		$ 96,970
TOTAL DIRECT COST		$205,096
INDIRECT (59% of $64,126)		37,834
Travel		$25,000
TOTAL COST		$267,930

6.11. University of Washington, HEPL. - Budget

Equipment:			
	Dewar (materials, fabrication)	$ 61.0k	
	Methane Study Dewar (Dewar, Argon, etc)	15.0k	
	Total		$ 76.0k
Personnel:			
	Engineer (4mmo)	20.0k	
	Technician (5mmo)	5.0k	
	Physicist (6mmo)	15.0k*	
	Research Assistant (12mmo)	14.0k	
	Post Doc (6mmo)	10.0k*	
	Total		64.0k
Travel:		15.0k	
Indirect Costs:			
	(51% non-equipment items)		40.0k
Total:		$195.0k	

* 50% of these salaries are paid from other sources