SSC PC-028
57 PAGES

NANOPTICS INCORPORATED

UNIVERSITY OF FLORIDA
Research & Technology Park
One Progress Boulevard, Box 37
Alachua, Florida 32615
Phone: 904 - 462 - 2094
Fax: 904 - 462 - 3932

PROPOSAL/SUB CONTRACT FOR PRODUCTION OF RADIATION HARD SCINTILLATOR

Prepared for:

Superconducting Super Collider

Dallas, Texas

October 1, 1989

NANOPTICS INCORPORATED

UNIVERSITY OF FLORIDA
Research & Technology Park
One Progress Boulevard, Box 37
Alachua, Florida. 32615
Phone: 904 - 462 - 2094
Fax: 904 - 462 - 3932

Statement of Confidentiality

This proposal includes confidential and/or proprietary drawings, specifications and other Data (collectively the "Data"). DOE will not duplicate, use, or disclose the Data, in whole or in part, to any person, firm, or corporation, other than DOE employees, and then only to such limited employees as are required to evaluate this proposal. Nanoptics, Inc., retains all ownership of and any copyright, patent or intellectual property rights in, the Data, and DOE obtains no rights of any kind in the Data whether by the submission of this proposal or otherwise. DOE, upon Nanoptics' request, or upon completion of its evaluation, shall return to Nanoptics the proposal/quotation and all Data related thereto and any copies thereof. If a contract is awarded to Nanoptics as the result of or in connection with this proposal, DOE shall have the right to duplicate, use of, disclose the Data to the extent provided in the resulting contract.

TABLE OF CONTENTS

1.	Introduction	3
2.	Properties of Siloxane Scintillator	4
3.	Processing of Polysiloxane Gel Scintillator Material	9
4.	Cladding Materials	10
5.	Proposed Equipment	11
6.	Objectives of the Proposed Research	14
7.	Work Plan and Milestones	16
8.	Budget	17-18
9.	Budget Justification	19
10.	Personnel	20
11.	Bibliography	31
12.	Figures	32-37
13.	Appendix I - Description of Nanoptics	38
14.	Appendix II - Hills R & D Inc., Fiber Spinning Equipment	41
15.	Appendix III - Killion, Coextrusion Film Plate Equipment	48

Abstract

The Department of Energy has funded about twelve man years of effort at the University of Florida to create a plastic scintillator with properties similar to previous material, but with for a factor of one hundred greater resistance to optical degradation by nuclear radiation. This project has been successful and the precise conditions for producing the material are known. The University of Florida has applied for worldwide patent protection for this invention.

Nanoptics, Inc., has negotiated an exclusive license with the University of Florida to commercialize the invention. It is now necessary to process this material into the forms of clad fibers and plates suitable for use at the SSC. The purpose of this proposal to the SSC is for Nanoptics, Inc., to acquire the equipment for material processing. We are requesting the smallest scale research type extrusion equipment which is commercially produced. From the time of ordering, it will take 6-8 months for manufacture and delivery of the equipment. Given the short time scale for SSC detector development before designs will be frozen, it is essential that material processing equipment be acquired as soon as possible.

Personnel in, or consulting with Nanoptics, Inc., have over thirty man years of experience in fiber production. The SSC has great need of this material, we know how to make the material, we have the expertise to process the material, we request support for the equipment to process the material into the form required for the SSC.

Finally, given the financial and manpower investment in this project up to this point in time, it is economically important to ensure the retention of the full scale commercialization of this high technology within the USA. We request full support for Nanoptics, Inc., in this challenging technical development which is important to the full exploitation of the SSC.

1. Introduction

There is great interest by a number of collaborations in the use of plastic scintillator as the active medium of choice for particle detection at the SSC. This is evidenced by the large number of major subsystem proposals utilizing plastic scintillator for either calorimetry or particle tracking.

It is well known that the radiation hardness of conventional polystyrene (PS) or polyvinyltoluene (PVT) based scintillator is inadequate for the desired levels of stability over a typical ten year utilization period in the anticipated radiation fields at the SSC. Much of the recent interest in the use of plastic scintillator at the SSC has been stimulated by the discovery at the University of Florida that polysiloxane based scintillators offer an approximate one hundred fold improvement in resistance to radiation degradation compared to conventional scintillator at a given wavelength of emitted light. This new scintillator promises to offer the desirable features of conventional plastic scintillator coupled with this remarkable improvement in radiation stability. Primary and secondary fluors have been chosen for the new siloxane scintillator and work is continuing on a systematic investigation of the optimum fluors to be used in the case of wavelength shifting materials. This work is being done at the University of Florida.

An SSC calorimeter detector will require approximately 10^8 meters of fiber in one design, and 10^6 plates in another. A third design requires a mixture of plates and fibers. In each case, the quantity of fiber and/or plate is so great that it demands extrusion processing technology for the plastic scintillator production. We anticipate that siloxane scintillator for calorimeters will most economically be produced using thermoset siloxane. The purpose of this proposal is to support Nanoptics, Inc., to develop the production capacity for thermoset siloxane suitable for prototype subsystem calorimetry at the SSC. A synopsis of a description of Nanoptics, Inc., is given in Appendix I. To meet the time

scale which has been established for SSC detector prototype research, and detector proposal submission, it is essential for Nanoptics, Inc., to initiate development of the thermoset siloxane production technology at this time. There is a 6-8 month lead time for extrusion equipment delivery.

Nanoptics, Inc., is funded through a Small Business Innovation Research grant from the DOE to develop the first thermoplastic siloxane. This plastic will be particularly suited to the micro-fibers required for particle tracking. Coherent bundles of these micro-fibers will be produced for this purpose. This proposal does not address that processing technology. Nanoptics, Inc., received a second SBIR, from the National Science Foundation, to study deterioration of siloxane and fluors by UV radiation and high temperatures.

2. Properties of Siloxane Scintillator

a) Plastic Transmission and Radiation Hardness

Work at the University of Florida has resulted in the identification of the most radiation hard optically transparent polymers known to this date, polyorganosiloxanes. There is $<<$ 1% transmission loss in 1.5 cm samples at 450 nm after exposure to 18 Mrads in Argon (The radiation resistance is slightly better in Argon than in air). This is depicted in Figure I where polydimethyldiphenylsiloxane is compared to polyvinyltoluene, a widely used commercially available scintillator base. Polyvinyltoluene exhibits significant absorption at wavelengths greater than 600 nm after exposure to 1 Mrad. This is true whether samples are exposed in Argon or in air.

The development of color centers (or yellowing) in plastics with time is also a well known characteristic. This property is prevalent in polystyrene, polyvinyltoluene and platinum cured polydiorganosiloxanes. The High Energy Physics group at the University

of Florida has conducted extensive research in this area. In addition, Nanoptics, Inc., received an SBIR from the NSF to study UV and high temperature induced yellowing of polysiloxane. It now appears evident that polyorganosiloxane samples cured with peroxide rather than platinum exhibit an undetectable tendency to "yellow" with time and are very resistant to temperature induced yellowing. In these respects the material is at least as good as the conventional plastics.

The chemistry involved in the peroxide cure reaction is:

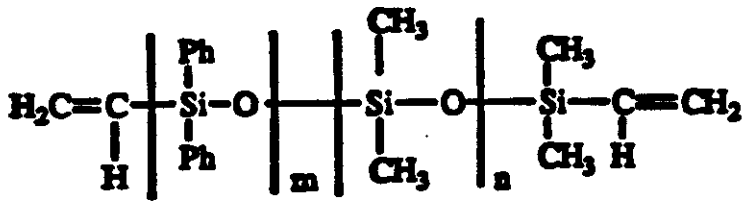

m/n = 1/5

A specific peroxide cure agent has been identified for use in this reaction:

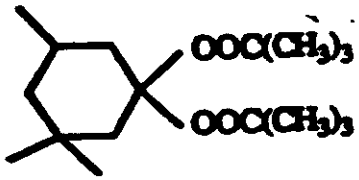

1,1-Bis-(t-butylperoxy)-3,3,5-trimethyl-cyclohexane

It appears that peroxide cured polydimethyldiphenysiloxanes will withstand high radiation doses and resist "yellowing" with time.

b) Plastic and Primary Fluor

In addition to plastic scintillator base research, the High Energy Physics group at the University of Florida has identified radiation hard primary fluors. They have demonstrated that appropriate quaterphenyls dissolved in polydiorganosiloxane have high quantum efficiencies, nsec decay times, and < 10% loss of light output after an irradiation of 10^7 Rads.

These "appropriate" quaterphenyls were identified by analyzing the mechanism of radiation induced decrease in light transmission in oligophenylene/siloxane based scintillator. The problem was to identify, fluor substituents which enhance solubility but are not labile to radiation. That is, some bulky, solubility enhancing substituents react under irradiation to produce color centers. Light output reduction is not the result of damage to the oligophenylene fluor but rather to the solubility enhancing substituents. (See Figure II). Thin samples showed no significant light output loss after 10 Mrad exposure, meaning that there is negligible loss due to chromophore degradation (Figure III). In thick samples light output decrease correlates with optical density increase at the emission maximum (Figure IV). In all cases, increasing the complexity of substituents leads to increasing color center formation which is the main source of optical damage to the scintillator.

The High Energy Physics group is currently testing oligophenylene dyes made soluble with t-butyl groups. These dyes have shown the greatest photostability to date in quaterphenyl laser dye operation. When pumped by a xenon chloride eximer laser these dyes were six times more stable than previously tested dyes (1). T-butyl groups

impede degradation reactions by sterically hindering the approach of adjacent molecules to the chromophore (2).

In the polysiloxane system, t-butyl fluor substituents are expected to

a) increase solubility

b) decrease reactivity

c) impede fluor migration

In reference to c) long term migration of fluors to the siloxane surface has been observed in some cases (3, 4). We have decided on the chemical route to covalently bond the fluors to the polymer if this turns out to be a problem. Accelerated aging studies are underway to quantify the effect.

c) Secondary Dye Work

In order to take full advantage of the polysiloxane-based scintillators one must shift the primary dye emission wavelength to greater than or equal to 450 nm, where polysiloxane does not experience any transmission loss after 18 Mrad irradiation dose in Argon. This has now been accomplished by using a secondary dye in combination with the primary fluor, as a wavelength shifter. Much work in the last year has gone into secondary dye synthesis, characterization and testing.

Three classes of wavelength shifter dyes have been investigated. The stability of the best combination of plastic and dyes is shown in Figure V. This new plastic scintillator has about one hundred times the resistance to degradation by nuclear radiation compared with the standard commercial product, Bicron 408 which does emit at a slightly shorter wavelength. As well as the usual properties of high quantum efficiency, radiation hardness, and short fluorescence time an additional property is highly desirable for a secondary fluor. This is the property of a low self reabsorption at a wavelength

corresponding to the peak emission of the dye. Since, the light attenuation of a plastic scintillator is usually determined by this parameter, considerable effort has been expended to achieve a low molar extinction coefficient at 450 nm for the secondary dye (which we identify as N.l.s.d.450c). Figure VII shows the molar extinction coefficient in this wavelength range. The ratio of the extinction coefficient at 450 nm to the extinction coefficient at peak absorption at 370 nm is 10^{-5}. This is a remarkably low ratio. It is about 100 times better than POPOP and is comparable to the value measured with a proton transfer dye such as 3HF which has very large Stokes shift. In the case of this secondary dye, the low ration comes not from an intrinsically large Stokes shift, but from the detailed dynamics of the molecular transitions undergone by the dye.

The extremely low reabsorption by the dye makes it's use in fibers particularly attractive. In fact, the reflection coefficient between the core and cladding will probably dominate the attenuation of the 450 nm light in fibers. A preliminary measurement of attenuation of scintillation light in a 25 cm long strip with 10 mm X 2 mm cross section gave an attenuation length ≥ 75 cms. It is now of great importance to address the processing of the scintillator material into fibers and plates (possibly clad as well) to achieve the optimum processing conditions for maximum internal reflection coefficient.

d) Siloxane Physical Properties

Nanoptics will use vinyl terminated high molecular weight polydimethyldiphenylsiloxane gel for spinning 1 mm clad fibers and for scintillator plates. The structure of this peroxide cure, gel siloxane (depicted earlier) has advantages over platinum cure systems. These are:

1) "Yellowing" with time is not observed.

2) Platinum cure systems react with proton transfer dyes (3-HF) and eliminate fluorescence. Peroxide cure systems do not interfere with tautomeric fluorescence.

3) The peroxide cure gels cure to a shore A hardness of ≈ 70. The surface is not tacky, whereas platinum cure systems cure to a hardness of 8-20 and are tacky (5).

4) In order to reaction spin coextruded fibers, a high viscosity core material is needed. The high molecular weight gel selected has a viscosity of 200,000 cps at room temperature. This is discussed more completely in the next section.

5) Commercially available methyl/phenyl siloxane gels are used widely as high performance elastomers. These materials are optically transparent. Because of their wide use, the cost is significantly less than for platinum cured gels.

3) Processing of Polysiloxane Gel Scintillator Material

The siloxane gel cures (is transformed into a material which does not flow) by crosslinking. After crosslinking the material is not thermally processible. To meet the needs of SSC detectors we propose to reaction spin clad fibers and to reaction extrude clad plates. We make note of three significant facts:

a) Reaction spinning of other polymers (including crosslinked polyurethane) has been developed (6,7).

b) The literature cites a patent on the production of clad, cured, cross-linked siloxane fibers (8).

c) Armet Industries Inc. produces extruded, crosslinked siloxane tubes.

In addition, every expert we have consulted is confident the process will work. The peroxide catalyst and siloxane will be mixed in a roll mill. The extruder will convey this material to a spinnerette head (for fibers) or to a film/sheet die. The material must solidify or cure after exit from the head or die. In the spinnerette head or plate die, the material will be encased in a thermoplastic (meltable) fluorocarbon. These fluorocarbons solidify rapidly upon exit from the extruder. They act as bottles encasing the catalyzed siloxane which will be cured after the encasement process. Cure will take place at a temperature below the melting point of the cladding. We have already shown that the siloxane completely cures at temperatures as low as 100°C. This is below the melting point of the cladding materials. (See next section).

4. Cladding Materials

The High Energy Physics Group at U of F has identified optimum fluorocarbon cladding materials. These are: Kynar 7201, Kynar 9301 and Kynar 2801. Two properties are of utmost importance in reaction processing:

a) Thermal properties - processing temperature

b) Optical properties - refractive index.

The following table summarizes these properties and is discussed below. PVDF, a commonly used fluoropolymer for cladding glass fibers is included for comparison:

	Processing Temperature	n	θ_c
KYNAR 7201	120°C	1.41	16.4
KYNAR 9301	110°C	1.40	17.8
KYNAR 2811	140°C	1.41	16.4
PVDF	> 170°C	1.42	15.0
SILOXANE GEL	≥ 100°C(Reaction (Temperature)	1.47	

Thermal properties of the siloxane dictate the choice of cladding materials. The peroxide catalyzed system reacts at temperatures ≥ 100°C. However, it must react after exit from the extruder. The extruder throughout is 12 lbs./hour. The average residence time of the material in the heated extruder is 3 minutes. At temperatures below 160°C the siloxane cure time is much longer than 3 minutes. The three Kynars listed have ideal thermal properties for reaction extrusion. In addition, the fluors are not thermally degraded at these temperatures. Fluoropolymers commonly used to clad glass fibers are processed at temperatures from 180-260°C. At these temperatures the fluors would degrade and the siloxane would crosslink in the extruder.

In order to ensure good light pipe trapping, the refractive index of the cladding material must be lower than that of the core. Optimum efficiency of light pipe trapping is obtained at confinement angles of 8° or higher (9). The confinement angle is defined as:

$$\Theta_c = 90° - \text{Arc Sin } (\Theta \text{ cladding}/\Theta \text{ core})$$

The above table illustrates that the selected cladding materials have ideal optical and thermal properties for processing our scintillator material.

5. Proposed Equipment

We propose to purchase equipment to produce clad fibers and clad scintillator plates. The same up stream compounding, feeding and extrusion conveying equipment will be used for both plates and fibers.

The equipment consists of 5 subsystems:

a) A Two Roll Mill compounder for mixing dye and peroxide with the gel, $10,000.

b) A Ram feeder to feed the gel into the gel extruder. A conventional chip to hopper to feed the cladding pellets into the cladding extruder, $2,000.

c) Two one inch diameter single screw extruders with three heating zones and 3HP Wertic brushless DC motors.

d) Fiber spinning attachment and down stream take up equipment:

Pump heads and Drive

Polymer transfer lines

Spin head

Spin pack

Water quench bath

Denier strand control roll

Spool winder

Spinnerette frame

Items under c and d are priced as a unit. The total cost of c and d is $159,000. c and d will be purchased from Hills R & D Inc., their price quote and detailed equipment description is in Appendix II of this proposal.

e) Film plate coextrusion attachment and down stream take up device;

ABA design extrusion adaptor	$ 8,340
6 inch wide coextrusion dye	$ 3,075
Adapter Flanges	$ 560
Film chill roller	$11,300
Film winder	$ 2,700

The items under e will be purchased from Killion. Their price quote and equipment description is enclosed in Appendix III.

The initial step in polysiloxane scintillator processing involves addition of the dye and peroxide to the siloxane. We have selected a Thropp Two Roll Lab Mill, 2" diameter X 6" long for this purpose. Small quantities of fluors and peroxide (< .1% by weight) must be added to the polymer. This is best undertaken in a batch process on a two roll mill.

The cladding material is available in pellet form is easily transferred to the extruder via a conventional hopper. The siloxane extruder will be equipped with a Ram feeder. Here, the gel is placed in a rectangular shaft leading to the extruder. A piston attached to a plate (at a 45° angle to the shaft) forces the gel into the extruder. This is a conventional technique for feeding rubber into an extruder.

The fiber spinning assembly is mounted directly on the two extruders. Pump heads are used to meter and feed the material from the extruder to the spin head via polymer transfer lines. These lines are electrically heated to protect against freezing. In the spin head the two melt streams are brought together into the spin pack. The spin pack is especially designed for optical fiber spinning. It contains a filtration unit and the proper channeling to bring the polymers together in a sheath/core format. The spin pack will make one strand at a time.

The molten core/sheath strand is extruded into a water bath beneath the spinnerette. The diameter of the fiber (1 mm) is controlled by changing the speed of a polished denier control roll. The fiber is then wound on a spool type winder.

At this stage, the siloxane gum, fluor and catalyst are encased in a "bottle" of fluorocarbon polymer. The peroxide has not yet catalyzed the reaction. The average residence time in the spinning system is three minutes. At 100-150°C the cure time is over 1 hour. The fiber can be easily cured after spinning by placing the spool in a hot zone or oven.

This equipment is interchangeable so that parts including the extruder and up stream to the extruder (feed assemblies) can be attached to the coextrusion film plate unit. Again, our requirement is that the unreacted siloxane be encased in a "bottle" of fluorocarbon. The coextruded film plate will consist of fluorocarbon, siloxane, fluorocarbon layers. The sides will also be encased in fluorocarbon. This is known as a "coat hanger" geometry.

An ABA combination adapter transfers polymers from the extruders to the die. A 6 inch wide dye is equipped with the proper channels to produce 1 mm thick clad film plate. The dye is heated and equipped with adapter flanges. In film formation, the film is "solidified" by a chill roller rather than a water bath. The roller can accommodate plate up to several mm thickness. The film is then transferred to a winder and cured as discussed above for fibers. It may be noted that several years ago Saclay extruded one to five mm thick scintillator plate and achieved a thickness uniformity of ± 3% which is adequate for our purposes.

Note: This equipment has been specifically designed for Nanoptics to produce optical fibers and plates. Special attention has been paid to adequate space for efficient filtering of materials. The equipment manufacturers will, work with us on production start up.

6. Objectives of the Proposed Research

The objective is to produce radiation hard plastic scintillator and wavelength shifter suitable for use in prototype subsystems for the SSC. Nanoptics will produce radiation hard scintillator with the following characteristics:

a) Fluorescence decay times less than three to four nanoseconds.

b) Light output greater than 50% of standard commercial scintillator.

c) Attenuation length for light transmission in the plastic scintillator or wavelength shifter comparable to existing commercially available material.

d) The plastic scintillator will have controllable flexibility for rapid manipulation of fibers and plates.

e) Minimum change in light output and attenuation length at exposures up to 10^7 rads.

Three calorimeters have been proposed for SSC use:

FITCAL	Calorimeter
ZEUS	Calorimeter
SPAGETTI	Calorimeter

Both FITCAL and ZEUS require scintillator plates with a primary dye which absorbs at 300 and emits at 370 nm and a secondary dye which absorbs at 370 and emits at 450 nm. Both systems require wavelength shifter material which absorbs at 450 and emits at ≥ 500 nm. The SPAGETTI calorimeter requires scintillating fiber with a dye that absorbs at 300 and emits at > 500 nm. A large Stokes shift is needed to minimize self absorption in these two meter long fibers.

The High Energy Physics Group at the University of Florida is developing fluor/siloxane formulas to meet these needs.

Nanoptics will process plates and fibers using the appropriate formulations. The specific objective's of this proposal are to:

a) Develop and optimize processing techniques for producing clad fibers and clad scintillator plates.

b) To produce the above materials in sufficient quantities to supply to sub-system prototype groups for study and evaluation.

c) To complete all background evaluations work necessary to allow scale up on the production level with multiple machinery to produce all plates and/or fiber used in the SSC.

7. Work Plan and Milestones

Year I:

To = approval time

a) To: Order equipment

b) To + 6 months: optimum materials processing characteristics determined by U of F funded proposal under SSC generic research.

c) To + 6-8 months: Equipment delivery and set up. Begin machinery optimization.

d) To + 10 months: Prototype production runs begin for approved scintillator subsystem groups for SSC. Scintillator plates will be optimized at this time.

e) To + 12 months: Delivery of prototype plates to approved groups.

Year II:

f) To + 12 months: Step d above repeated for fibers.

g) To + 14 months: Step e above repeated for fibers.

h) To + 15 months: Begin plate production for complete plate subsystem proposal.

i) To + 18 months: Deliver plates.

j) To + 18 months: Begin fiber production for complete fiber subsystem proposal.

k) To + 21 months: Deliver fibers.

8. Budget

Budget for Year I

A.	Salaries		
	1. Materials Scientist	$ 40,000	
	2. Technician	22,000	
		$ 62,000	
	Benefits at 25%	$ 15,500	
	TOTAL SALARIES		$ 77,500
B.	Equipment		
	1. Compounding equipment	$ 10,000	
	2. Extrusion equipment	186,975	
	3. Test equipment and parts	20,000	
	TOTAL EQUIPMENT		$216,975
C.	Material		
	1. Plastic	$ 12,000	
	2. Fluorescent dyes	10,000	
	3. Miscellaneous	5,000	
	TOTAL MATERIALS		$ 27,000
D.	Travel		$ 5,000
E.	Consultants		$ 4,000
F.	Indirect Costs (at 40% of non-equipment cost)		$ 45,400
	TOTAL COST		$375,875

Budget for Year II

A.	Salaries		
	1. Materials Scientist	$ 40,000	
	2. Technician	22,000	
		$ 62,000	
	Benefits at 25%	$ 15,500	
	TOTAL SALARIES		$ 77,500
B.	Equipment		
	1. Extrusion equipment	$ 25,000	
	2. Miscellaneous	10,000	
	TOTAL EQUIPMENT		$ 35,000
C.	Material		
	1. Plastic	$ 10,000	
	2. Fluorescent dyes	20,000	
	3. Miscellaneous	5,000	
	TOTAL MATERIALS		$ 35,000
D.	Travel		$ 5,000
E.	Consultants		$ 4,000
F.	Indirect Costs (at 40% of non equipment cost)		$ 48,600
	TOTAL COST		$205,100

Estimated Budget for Year III

The budget is estimated at $50,000 for Year III.

9. Budget Justification

The equipment which Nanoptics proposes to purchase will result in the capability to produce all types of scintillator and wavelength shifter needed for all of the subsystem plastic scintillator calorimeters that have been proposed for the SSC.

The bulk of the equipment, the coextrusion equipment, is multifaceted. That is, interchangeable parts allow for coextrusion of clad sheets or clad fibers. Two equipment designers worked with us in the equipment design. Mr. W. Baker of Hills R & D Inc., designed the coextrusion fiber spinning equipment. Hills R & D Inc. is a company whose efforts are directed specifically toward the design of research level fiber spinning equipment. They have developed an area of expertise in the spinning of bicomponent fibers. Killion extruders designed the "coat hanger" film plate coextrusion block for scintillator plate production. This plate design has been used by Killion in prior successful attempts to produce encased films/plates.

APC designed a special ram feeder to convey the gel to the extruder.

This equipment contains a combination of features not available in any commercially available systems. Therefore, the manufacturers will trial test the equipment prior to shipping in order to make necessary adjustments in the processing techniques.

The budget also allows for consultant fees. Three fiber specialists (described under the personnel section) will assist us in equipment start up. A Materials Scientist and Technician from Nanoptics will work on this project. Their salaries are included.

We have included in the budget the necessary materials allotment for polymer and fluors.

The budget for Year II is mainly for salaries and materials. Equipment allotments are for maintenance, spare parts, test equipment and possible coextrusion dye configurational changes.

10. Personnel

Dr. J. K. Walker, President of Nanoptics has 30 years experience working with scintillators. He was a consultant to Pilot Chemical Company, the largest producer of scintillator in the US. He has had two SBIR's funded for Nanoptics. He is also the Head of High Energy Physics at the University of Florida.

Dr. J. Harmon, is an Associate Research Scientist in the Physics Department at the University of Florida and Chief Materials Scientist at Nanoptics, Inc. She has previously worked as a Research Scientists with Eastman Kodak Company. She has extensive research experience in polymer processing and polymer synthesis. She holds patents in the area of dye polymer interactions.

Dr. K. Wagener, Chief Chemist in Nanoptics, Inc., has eleven years of industrial fiber spinning experience and is a leading polymer chemist now in the Department of Chemistry at the University of Florida. Dr. Wagener's group at the University of Florida consists of 13 people and he is the project leader of a 2.5 million dollar DARPA project on polymers. He also supervises a graduate student and a postdoctoral associate on the synthesis of polysiloxane thermoplastic elastomers which is of direct relevance to this project. This has recently been successful and a patent has been filed for this process.

Dr. A. S. Abhiraman is a consultant to Nanoptics to the project on fiber spinning. He is a Professor and Director of Polymer Programs in the School of Chemical Engineering at Georgia Institute of Technology. Previous to that, he had several years of industrial fiber spinning experience. He is internationally recognized as having made pioneering contributions in fundamental aspects of fiber spinning. In 1987 he received the Fiber Society Award for Distinguished Achievement.

Dr. W. Baker is the Technical Director in charge of designing fiber spinning equipment at Hills Research and Development, Inc. of Melbourne, Florida. He has extensive experience in the area of coextruding clad fibers. He is a consultant on this project.

Dr. J. M. Kauffman is an expert in the area of fluor synthesis. He is a consultant to Nanoptics, Inc., and has actively contributed to this project by designing the molecular structures for primary and secondary fluors. He is an Associate Professor at the Philadelphia College of Pharmacy and Science.

Born: Greenock, Scotland, October 9, 1935; married 1960, 2 children
Social Security Number: 029-34-1833

Education:

B.Sc. (First Class Honors) Physics, 1957; Glasgow University
Ph.D. Physics, 1960; Glasgow University

Professional Record:

Assistant Scientist, Royal Navy Underwater Experimental Laboratory, Greenock, Scotland, 1954-55
Research Scientist, Ecole Normale Superieure, Orsay, France, 1960-62
Research Associate, Harvard University, 1962-64
Assistant Professor, Harvard University, 1964-67
Consultant to the Pilot Chemical Co., Watertown, Massachusetts, 1964-70
Associate Professor, Harvard University, 1967-68
Fellowship at the European Center for Nuclear Research in Geneva, Switzerland, 1968
Department Head, Neutrino Laboratory, Fermilab, 1969-71
Chairman, Physics Department, Fermilab, 1972-74
Department Head, Internal Target Laboratory, Fermilab, 1975-77
Deputy Head, Colliding Beams Department, Fermilab, 1978-1980
Project Leader, Prompt Neutrino Facility, 1980-1983
Fellowship at the Rutherford Laboratory, Oxfordshire, England, 1983
Fellowship at the Weizmann Institute, Israel, 1983
Fellowship at the European Center for Nuclear Research in Geneva, Switzerland, 1983-84
Research Scientist, Fermilab, 1969-1984
Adjunct Professor, University of Northern Illinois, 1973-83
Professor, University of Florida, 1984-present

National Service Awards

Lord Kelvin Award for Experimental Physics, 1960
Fellow of the British Physical Society 1960-62
John Simon Guggenheim Foundation Fellow, 1968
Member of the U.S. Organizing Committee for the 1979 International Symposium on Lepton and Photon Interactions at High Energies
Counselor and Member of the American Humanist Association
Member, Fermilab National Laboratory Users Executive Committee 1981-present
American Men and Women of Science

Publications: A total of 82 publications in various high energy physics and detector instrumentation.

Patent: Polysiloxane Composition Scintillator (1988).

Relevant Publications

1. J. K. Walker, et al. "A New Radiation-Resistant Plastic Scintillator" accepted for publication in IEEE Transactions on Nuclear Science.
2. J. K. Walker, et al. "A Pilot Study of the Radiation Resistance of Selected Plastic Scintillators" accepted for publication in IEEE Transactions on Nuclear Science.
3. J. K. Walker, et al. "A New Radiation-Hard Plastic Scintillator" accepted for publication in Nuclear Instruments and Methods.
4. J. K. Walker, et al. "A Pilot Study of the Radiation Resistance of Selected Plastic Scintillators" accepted for publication in Nuclear Instruments and Methods.

J. K. Walker, et al. "Fast, Radiation Hard Scintillating Detector, A Potential Application for Sol-Gel Glass" accepted for publication in Bull. of the American Ceramic Society.

Professional Activity

Presentation at the Workshop on Scintillating Fiber Detector Development at SSC, Fermi Laboratory, Chicago, IL November 1988.

CURRICULUM VITA
JULIE P. HARMON

PERSONAL Birthdate: March 28, 1949

Education

B.S. Chemistry, Mercyhurst College, Erie, PA, Cum Laude (1971).
M.S. Chemistry, Duquesne University, Pittsburgh, PA (1973).
Ph.D. Materials Science, Univ.of Rochester, Rochester, NY (1983)

Specialization

Solid state properties of polymers - mechanical properties, transport properties and structure-property relations. Photochemistry - Polymer, dye light stability.

Employment

1988-Present, Nanoptics Inc., Progress Center, Alachua, Florida, 32615. Chief Materials Scientist, studying mechanical properties of polymers, polymer processing, and dye polymer interactions.

1989-Present, Dept. of Physics, Univ. of FL, Gainesville, Florida, Associate Research Scientist. High Energy Physics, Researching Mechanical Properties of polymers, polymer processing, and dye polymer interactions.

1983-88, Eastman Kodak Research Laboratories, Rochester, NY, Research Scientist. Research activities included mechanical properties of polymers-impact modifications; dye diffusion, solubility and immobilization in polymers; polymer processing of composites - extrusion, compounding, filler dispersion.

1976-77 UCO Optics, Scottsville, NY, Polymer Research Chemist. Research activities included biomedical polymers; diffusion induced deformation and swelling in hydrophilic polymers; polymer synthesis; the effect of structure on swelling and tear strength.

1973-75, PPG Industries, Pittsburgh, PA, Technical Service Representative. Technical activities included polymer composites; mechanical properties of composites; polymer processing - coating, laminating rotational molding.

TEACHING

"Mechanical Properties of Polymers," graduate level course, University of Rochester, Rochester, New York.

"Polymer Chemistry," St. John Fischer College, Rochester, NY.

PUBLICATIONS AND PATENTS

1. "Transport of Alcohols in Deformed PMMA," J. P. Harmon and J. C. M. Li, Annuals New York Academy of Science Conference on "Structure and Mobility in Molecular and Atomic Glasses," 371, 310, 1979.

2. "Methanol Transport in PMMA: The Effect of Mechanical Deformation," J. P. Harmon, S. Lee and J. C. M. Li, J. of Polym. Sci: Part A: Polym. Chem., Vol. 25, 3215-3229 (1987).

3. "Anisotropic Methanol Transport in PMMA After Mechanical Deformation," J. Harmon, S. Lee and J. C. M. Li, Polymer, Vol. 29, 1221-1226 (1988).

4. "Internal Stresses and Physical Aging," J. P. Harmon and C. L. Beatty, Engineering Materials Handbook, Vol. 2, Engineering Plastics, Cyral A. Dostal, Ed. 1988.

5. "Colored Electroscopic Toners Containing Quenched Esterified Rhodamine Dyes," W. T. Gruenbaum, J. P. Harmon and L. C. Roberts, Eastman Kodak Company, Rochester, NY, U. S. Patent No. 4,711,832.

6. "Toners and Yellow Dye Compounds Used Therein," D. D. Chapman and J. P. Harmon, Eastman Kodak Company, Rochester, NY, U. S. Patent No. 4,734,349.

7. Two patents pending (Eastman Kodak).

PRESENTATIONS

1. Syracuse University, Syracuse, New York (1982), "Penetrant Transport in Deformed Polymers," J. Harmon, New York Academy of Sciences, New York, New York (1980).

2. "Enthalpy Recovery in Polystyrene," J. Harmon, New York Academy of Science, New York, New York (1980).

3. "Alcohol Transport in Deformed PMMA," J. Harmon, Florida Advanced MAterials Society, Palm Coast, Florida (1987).

4. "Microhardness of Polymer Composites," J. Harmon, R. Crawford and C.L. Beatty, Florida Advanced Materials Society, Palm Coast, Florida (1987).

5. "Diffusion in Deformed Polymer Matrices," J. Harmon, Southeastern Section, American Chemical Society, Orlando, Florida (1987).

6. "Study of Anti-Corrosion Coatings for Stainless Steel," J. Harmon and C.L. Beatty, Southeastern Section, American Chemical Society, Orlando, Florida (1987).

7. "The Effect of Sorbed Hydrocarbons on Polymeric Foam PRoperties," J. Harmon, W. Williams, J. Dixon and C. L. Beatty, American Chemical Society, Orlando, Florida (1987).

8. "Use of Deformation in Different States of Stress to Bias the Glass Transition Temperature and Relaxation Behavior," Y. Katz, J. Harmon and C. L. Beatty, The Society of Rheology, Atlanta, Georgia (1987).

9. "Liquid Transport in Anelastically Deformed Glassy Polymer," J. P. Harmon, S. Lee and J.C.M. Li, Polymer Processing Society, Fourth Annual Meeting, Orlando, Florida (1988)

10. "Fatigue Resistant Anti-Corrosion Coatings," J. Harmon, S. Singleton, and C. L. Beatty, Polymer Processing Society, Fourth Annual Meeting, Orlando, Florida (1988)

11. "Dynamic Mechanical Properties of PVC Plastisols: The Effects of Cure Conditions and Plasticizer Migration," W. Daher, C. Garrett, J. Harmon, and C. L. Beatty, Polymer Processing Society, Fourth Annual Meeting, Orlando, Florida (1988)

12. "Sorption of Liquids into Foams and Subsequent Changes in Mechanical Properties of the Foams," J. Harmon, D. Wingard, D. Bennett, J. Dixon, W. Williams, and C. L. Beatty, Polymer Processing Society, Fourth Annual Meeting, Orlando, Florida (1988)

13. "Nuclear Magnetic Resonance Imaging of Flow During Polymer Extrusion," T.H. Mareci, J. Harmon, and C. L. Beatty, Polymer Processing Society, Fourth Annual Meeting, Orlando, Florida (1988)

KENNETH B. WAGENER
CURRICULUM VITA

PROFESSIONAL EXPERIENCE

Associate Professor of Chemistry (August 1984 to date) and Director, Center for Macromolecular Science and Engineering, University of Florida, Gainesville. Teaching, research, and administration related to organic and polymer chemistry - current research group of 12 people (postdoctoral associates, graduates and undergraduates) engaged in research related to new synthetic methods to create well phase separated multiphase polymers, conductive polymers, and donor acceptor polymers.

Research Department Head, AKZO nv, American Enka Research, Asheville, NC (1973 to August 1984). Directed activities of 25 people engaged in bulk polymerizations and structure/property determinations - research in membranes, fibers, biopolymers, polymerization catalysis, conductive polymers, and polymer decomposition.

Promoted four times during this eleven year period (Research Department Head 1983-84; Membrane Research Section Head 1982-83; Research Scientist, Polymers 1976-83; Senior Research Chemist 1975-76) - offered position as Technical Director of Membrana, Inc. (an AKZO new venture in California) in 1983, a position I declined in order to enter academics.

From 1975 until 1984 I did collaborative research with professors at MIT, Technische Universitat Twente (Netherlands), Clemson, Virginia Tech and Georgia Tech.

Adjunct Professor of Chemistry, University of North Carolina at Asheville (1975 to August 1984). Evening teaching of organic and polymer courses (two courses each year) - three of the chemistry department's students awarded Fulbright Scholarships during my tenure there.

Publications

A. S. Abhiraman and K. B. Wagener, JOURNAL OF POLYMER SCIENCE, POLYMER PHYSICS EDITION, 25, 205 (1987).	**	"Evolution of Structure and Properties in a Fiber Formation from a Thermoplastic Polyester-Polyether Segmented Copolymer"
D. A. Johnson, K. B. Wagener and R. C. Lilly, U.S. Patent 4,322,522 (1982).	P	"Polyester Polyether Segmented Copolymers Stabilized Against Degradation by Ultraviolet Light via Copolymerization with Analogs of 2,2,6,6-Tetramethylpiperidine Derivatives"
K. B. Wagener, B. W. Spivey, Jr. and J. M. Chapman, Jr., Canadian Patent 1,102,035 (1981).	P	"Hydantoin Polyamide Polyoxyethylene Block Copolymers"
D. A. Johnson and K. B. Wagener, U.S. Patent 4,262,114 (1980).	P	"Segmented Thermoplastic Copolyesters"
P. R. Cheung, C. W. Roberts and K. B. Wagener, J. APPL. POLYM. SCI. 24, 1809 (1979).	**	"Synthesis, Photodegradation and Energy Transfer in a Series of Polyethylene Terephthalate-co-2,6-Napthalenedicarboxylate Copolymers"

PROFESSIONAL RECOGNITION

Forty national and international presentations, nineteen abstracted publications since joining faculty August 1984 - forty-five publications/patents total - among top 50 University of Florida researchers recognized by President Marshall Criser, 1988 - a Chemistry Teacher of the Year, 1986 - College of Liberal Arts & Sciences Teacher of the Year Finalist, 1987.

Primary force in establishing Chemistry Department Industrial Affiliates Program, 1987 - established the Polymer Chemistry Curriculum Development Award (a National award with Polymer Division of American Chemical Society), 1985 - winner of Enka President's Award, 1980 - only chemist and youngest person ever to receive Enka Incentive Stock Award (1150 shares), 1979.

PERSONAL

B.S. Chemistry/Math Minor, Clemson University, 1968 - Ph.D. Organic and Polymer Chemistry, University of Florida, 1973 - married, two sons - Margaret, Part-Time Faculty, Department of English, Santa Fe Community College, teaching literature and composition - David, age 15, 10th grade Buchholz High School - Peter, age 12, 7th grade Fort Clarke Middle School - two brothers, one a Ph.D. chemist, the other a minister - mother a retired high school teacher.

BIOGRAPHICAL SKETCH OF Dr. A. S. ABHIRAMAN

Professor
School of Chemical Engineering
Georgia Institute of Technology
Atlanta, GA 30332

EDUCATIONAL BACKGROUND

Degree	Year	University
Ph.D.	1975	N.C. State University
M.S.	1972	N.C. State University
B.Tech.	1969	University of Madras

EMPLOYMENT HISTORY

Title	Organization	Years
Professor	Georgia Tech	1986-
Associate Professor	Georgia Tech	1981-85
Assistant Professor	Georgia Tech	1979-80
Rheology Group Leader & Internal Consultant	American Enka Research Center	1977-79
Senior Research Engr. & Internal Consultant	American Enka Research Center	1974-76
Basic Research Assistant	N.C. State University	1969-74
Research Fellow	Textile Research Inst.	Summer '72

CURRENT FIELDS OF INTEREST

1. High Performance Fibers, especially Carbon/Graphite and Ceramic Fibers.
2. Thermodynamics and Kinetics of Crystallization in Polymers.
3. Principles of Fiber Formation (Rheology, Phase Transitions).
4. Porous Polymer Structures.
5. Polymer Morphology.
6. Stochastic Aspects in Polymer Science (Relaxation, Polymerization).

PROFESSIONAL ACTIVITIES

Member, The Fiber Society, 1981 to present.

Member, ACS, 1978 to present.

Student Member, Phi Kappa Phi.

Student Member, Chemistry Honorary Society.

Session Chairman, Gordon Research Conference on Fiber Science, 1984 and 1986.

AWARDS

- The Fiber Society Award for Distinguished Achievement (1987).
- The following awards have been earned by graduate students in Dr. Abhiraman's group.
    1. Sigma Xi Awards for Outstanding Thesis Research at Georgia Tech (3 awards in the last 4 years).
    2. Fiber Society Student Paper Award (1987).
    3. SPE-Southern Section-Student Paper Award (1987).

CONSULTING

1. American Enka Company (Fiber Formation).
2. Exxon Enterprises (Pitch-based Carbon Fibers).
3. Owens-Corning Fiberglass (High Performance Fibers).
4. Union Carbide (Carbon Fibers).
5. Coats and Clark (Synthetic Sewing Thread).
6. Rhone-Poulenc, France (Fiber Formation)

Biographical Sketch

Name: Joel M. Kauffman

Education:

Philadelphia College of Pharmacy & Science, B.S., Chemistry, 1958
Massachusetts Institute of Technology, Ph.D., Organic Chemistry, 1963

Honors:

Merck Chemistry Award
Griffes Scholarships (3) for highest GPA at PCPS
American Institute of Chemists Medal
American Chemical Society Award
PCPS Alumni Medal
National Science Foundation Regular Fellowships (4)

Experience:

Philadelphia College of Pharmacy & Science – 1979 to present
Associate Professor of Chemistry – 1985 to present
Assistant Professor of Chemistry – 1979–1985
Taught General, Organic, and Medicinal Chemistry; research on medicinals and fluorescent and/or laser dyes

Massachusetts College of Pharmacy, Boston, MA – 1977–1979
Research Associate; synthesized potential anticancer drugs

New England Nuclear Corp., Pilot Chemicals Div., Watertown, MA
Research & Development Director – 1972–1976
Senior Development Chemist – 1969–1972
Synthesized oligophenylenes as fast-response fluors for plastic scintillators. Improved production methods for fluors such as PPO, POPOP, Bis-MSB, DPS, TPBD. Formulated the liquid scintillator products Aquasol-2, Oxifluor-H2O, Oxifluor-CO2, Biofluor, Riafluor, Econofluor, Aquafluor, and Bray's Solution. Initiated commercial development of laser dyes.

I.C.I./Organics/Inc., Dighton, MA – 1967–1969
Research Chemist; developed syntheses and processes for plastics additives for PVC and PP.

Massachusetts College of Pharmacy, Boston, MA – 1964–1967
Post-Doctoral Fellow; synthesized potential antiradiation and antimalaria drugs under contract to the U. S. Army Medical Corps.

Thiokol Chemical Co., Reaction Motors Div., Denville, NJ – 1963–1964
Research Chemist; synthesized nitrosocarborane monomers for nitroso rubber for low-temperature use under DOD contract.

Publications (last five years):

A. N. Fletcher, D. E. Bliss, J. M. Kauffman, "Lasing and Fluorescent Characteristics of Nine New Flashlamp-Pumpable Coumarin Dyes in Ethanol and Ethanol:Water", Optics Commun. 47, 57 (1983).

W. O. Foye, Y. H. Kim, J. M. Kauffman, "Synthesis and Antileukemic Activity of 2-(2-Methylthio-2-aminovinyl)-1-methylquinolinium Iodides", J. Pharm. Sci. 72, 1356 (1983).

Lena A. Delisser-Matthews and Joel M. Kauffman, "3-Arylcoumarins as Fluorescent Indicators", Analyst 109, 1009-11 (1984).

Joel M. Kauffman and Joyce D. Zogott, "Drawing Chemical Structures with the Apple Macintosh", The Journal of Computers in Mathematics and Science Teaching", Fall, 1985, 32.

Joel M. Kauffman, Charles J. Kelley, and Richard N. Steppel, "o,o'-Bridged Oligophenylene Laser Dyes, and Dyestuff Lasers and Methods of Lasing Therewith", *U. S. Appl. filed 18 Feb 86.*

Joel M. Kauffman, "A Simple Method for the Determination of the Oxidation States of Atoms", J. Chem. Ed. 63, 474 (1986).

Joel M. Kauffman, "Chemistry Calculations Using a Commercial Spreadsheet Program on a Microcomputer", The Journal of Computers in Mathematics and Science Teaching", Spring, 1987, 38.

Joel M. Kauffman, C. J. Kelley, A. Ghiorghis, E. Neister, P. Prause, L. Armstrong, "Bridged Quaterphenyls as Flashlamp-Pumpable Laser Dyes", Laser Chemistry 7, 343 (1987).

J M. Kauffman, C. J. Kelley, A. Ghiorghis, "Potential High Pulse-Energy Laser Dyes Related to 4PyMPO-MePTs" Proceedings: Dye Laser/Laser Dye Technical Exchange Meeting, University of New Orleans, LA, 20 Apr 87, U. S. Army Missile Command Special Report RD-DE-87-1, 25.

C. J. Kelley, A. Ghiorghis, J M. Kauffman, "Ultraviolet Laser Dyes Invade the Visible", Proceedings: Dye Laser/Laser Dye Technical Exchange Meeting, University of New Orleans, LA, 20 Apr 87, U. S. Army Missile Command Special Report RD-DE-87-1, 55.

Joel M. Kauffman and James H. Bentley, "Effect of Various Anions and Zwitterions on the Lasing Properties of a Photostable Cationic Laser Dye", Laser Chemistry, *in press.*

Joel M. Kauffman, C. J. Kelley, A. Ghiorghis, E. Neister, L. Armstrong, "Cyclic Ether Auxofluors on Oligophenylene Laser Dyes", Laser Chem., *in press.*

J. M. Kauffman, C. J. Kelley, A. Ghiorghis, E. Neister, P. Prause, L. Armstrong, "Ultraviolet-Emitting Flashlamp-Pumpable Laser Dyes Derived from Bridged Quaterphenyls", Proc. Intl. Conf. *LASERS '87*, Society for Optical and Quantum Electronics, Lake Tahoe, NV, 11 Dec 87, *in press.*

BIBLIOGRAPHY

1. R.N. Stepped Private Communication

2. T.G. Pavlopoulos et al., J. A. Chem. Soc. 96, 6568 (1974).

3. M.K. Bowen, Study of New Polysiloxane-based Scintillators, M.S. Thesis, University of Florida, 1988.

4. M.K. Bowen, et al., IEEE. Nucl-Sci. Symp., 1988, pre-publication manuscript.

5. GE Silicones, "High Performance Elastomers" Technical Information. 1987. GE Company, Waterford, NY 12188.

6. H.A. Pohl, Textile Research Journal, June 1958, p. 473.

7. S.Y. Fok et al., Textile Research Journal, Feb. 1966, p. 131.

8. Patent(Japanese) Simito Elec. Ind. JP 63121004.

9. G. Keiser, Optical Fiber Communication, McGraw Hill, 1983, p.18.

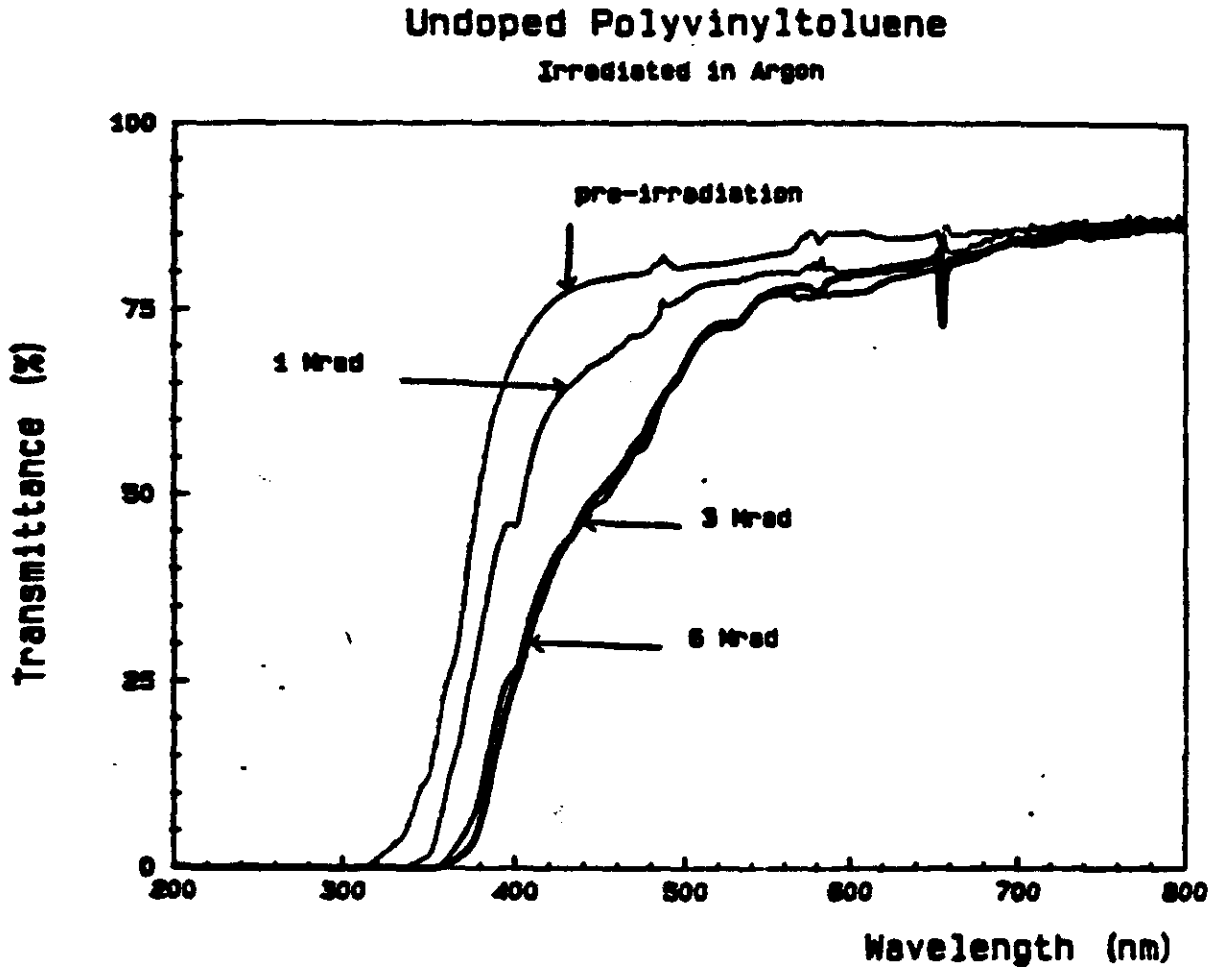
Undoped Polyvinyltoluene
Irradiated in Argon
pre-irradiation
1 Mrad
3 Mrad
6 Mrad
Transmittance (%)
Wavelength (nm)
100
75
50
25
0
200
300
400
500
600
700
800

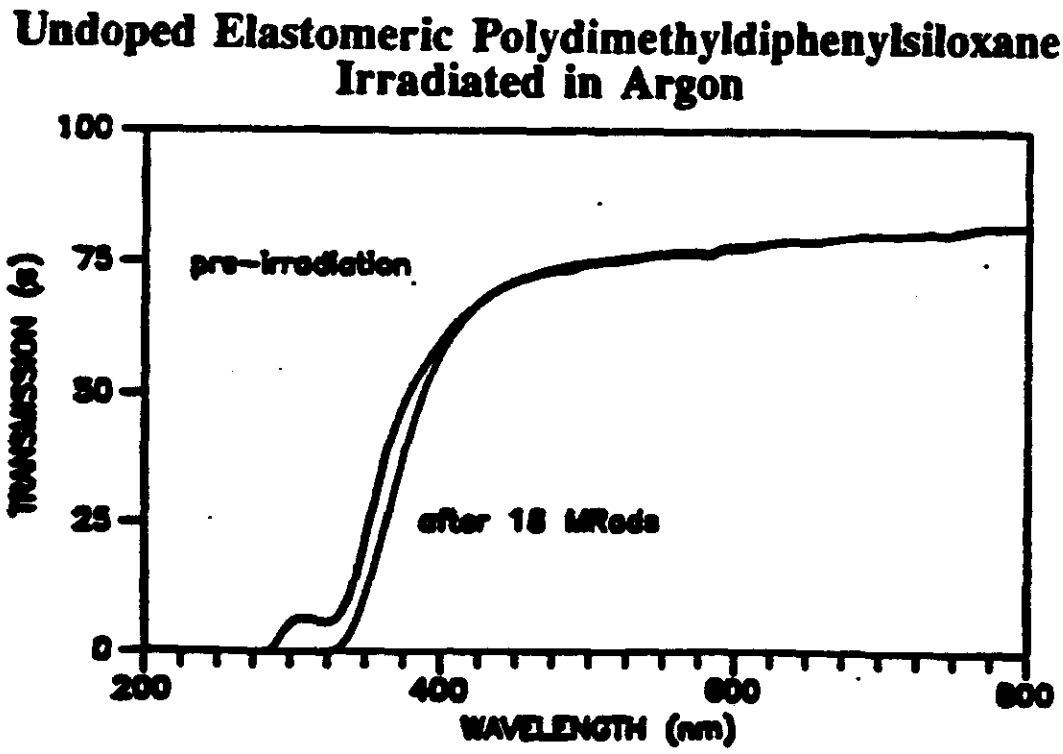
Undoped Elastomeric Polydimethyldiphenylsiloxane
Irradiated in Argon
pre-irradiation
after 18 MRads
TRANSMISSION (%)
WAVELENGTH (nm)
100
75
50
25
0
200
400
600
800

FIGURE I

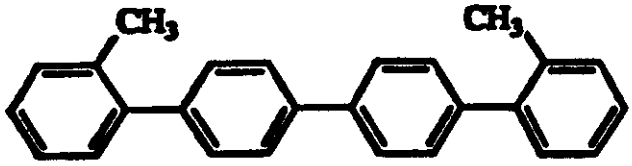

Dimethylquaterphenyl (1)

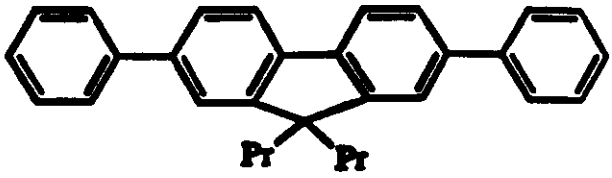

OLIGO 374 A (2)

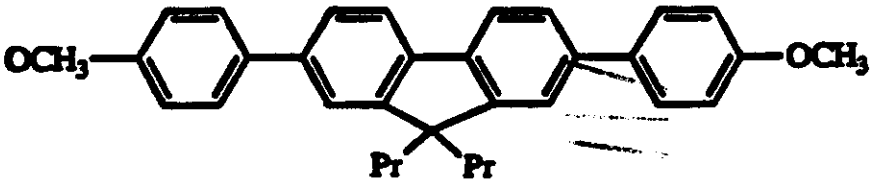

OLIGO 386 (3)

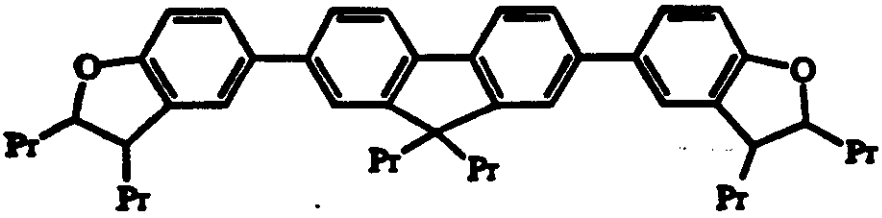

OLIGO 395 (4)

Structures of Oligophenylene Dyes

FIGURE II

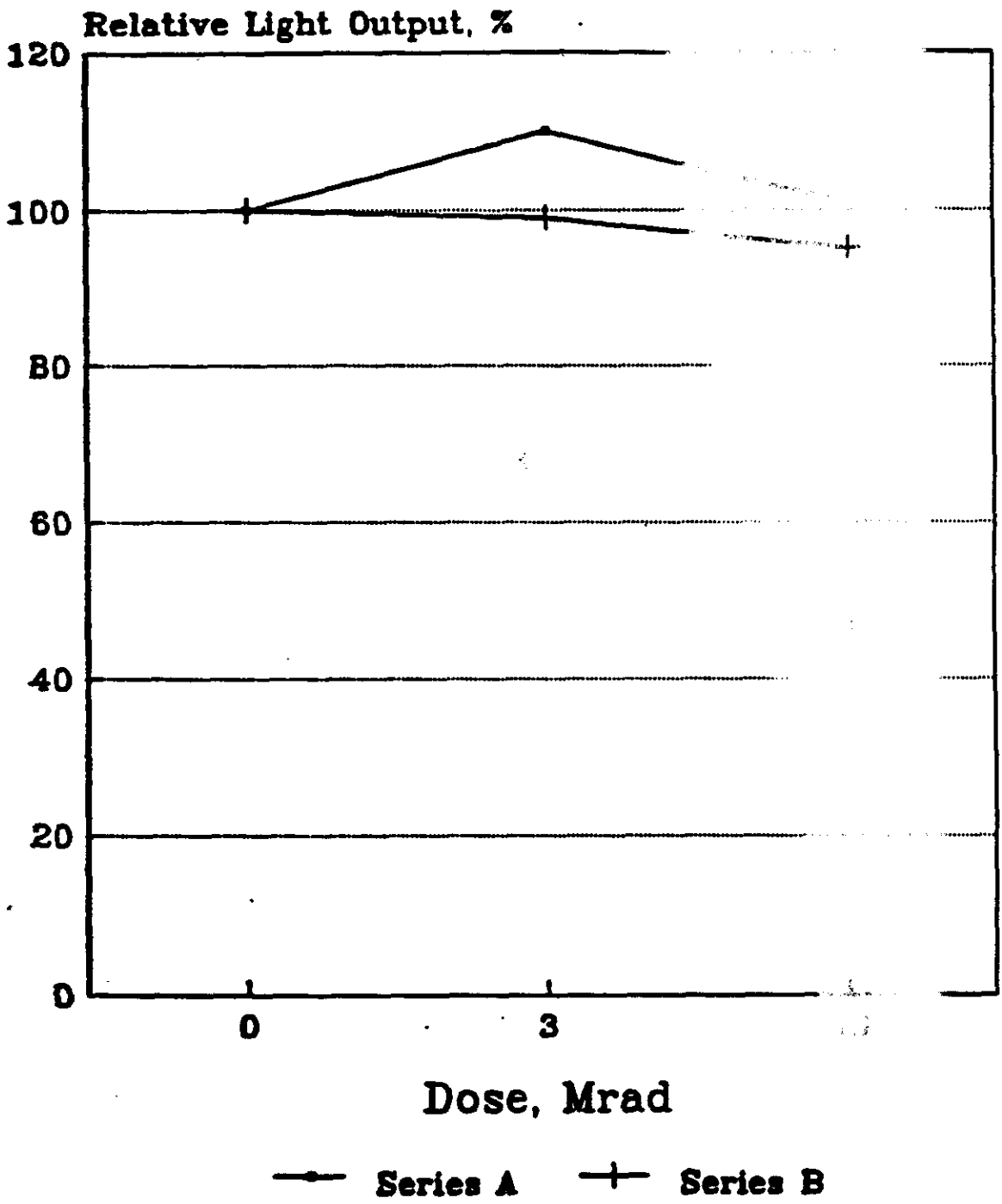

Irradiation of the 1 mm Samples of OLIGO 374A (A) and OLIGO [illegible] (B) in Polysiloxane in Argon

FIGURE III

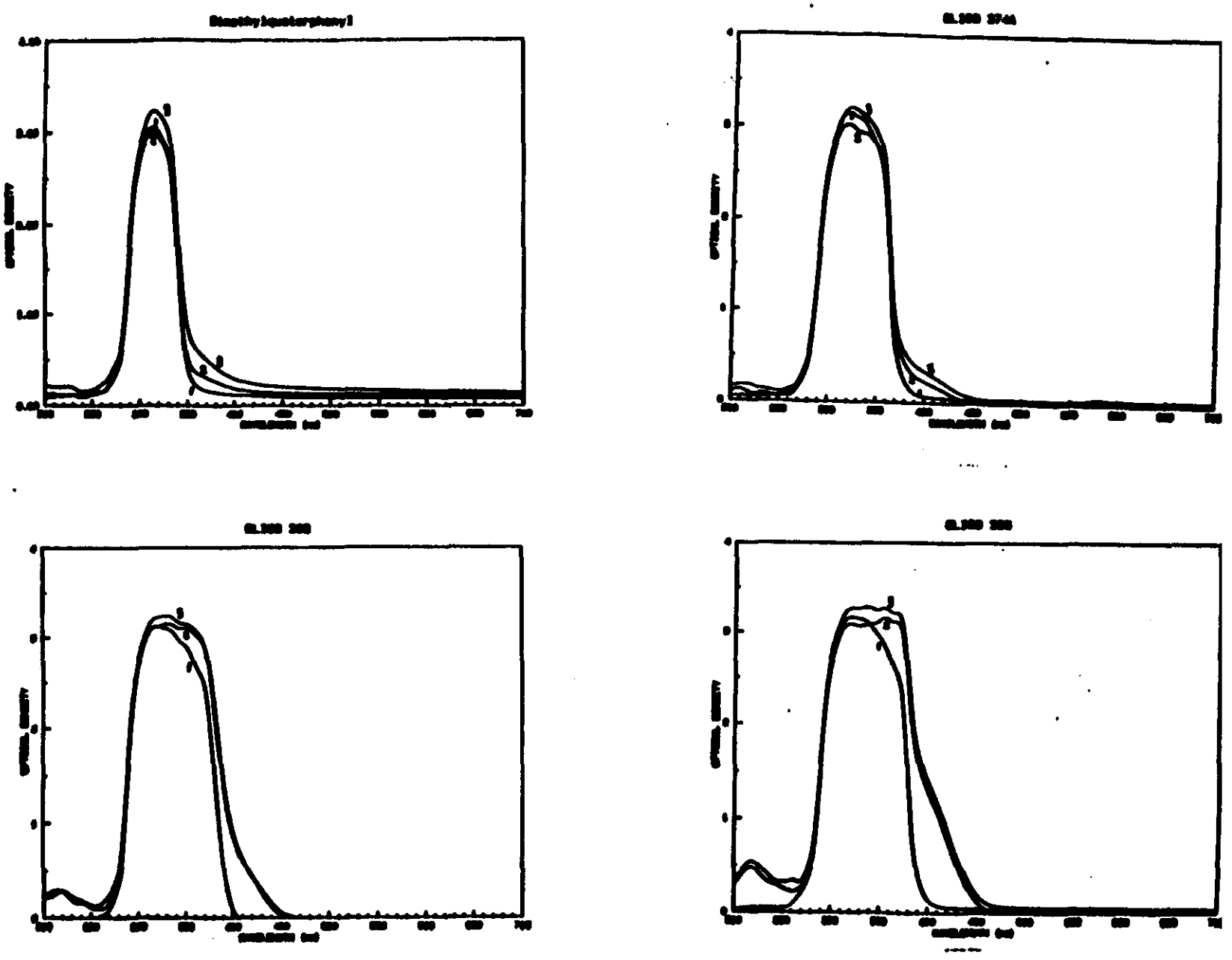

Irradiation in Argon. 1,2,3-0,3,10 Mrad respectively

FIGURE IV

RELATIVE LIGHT OUTPUT
Irradiation in Argon

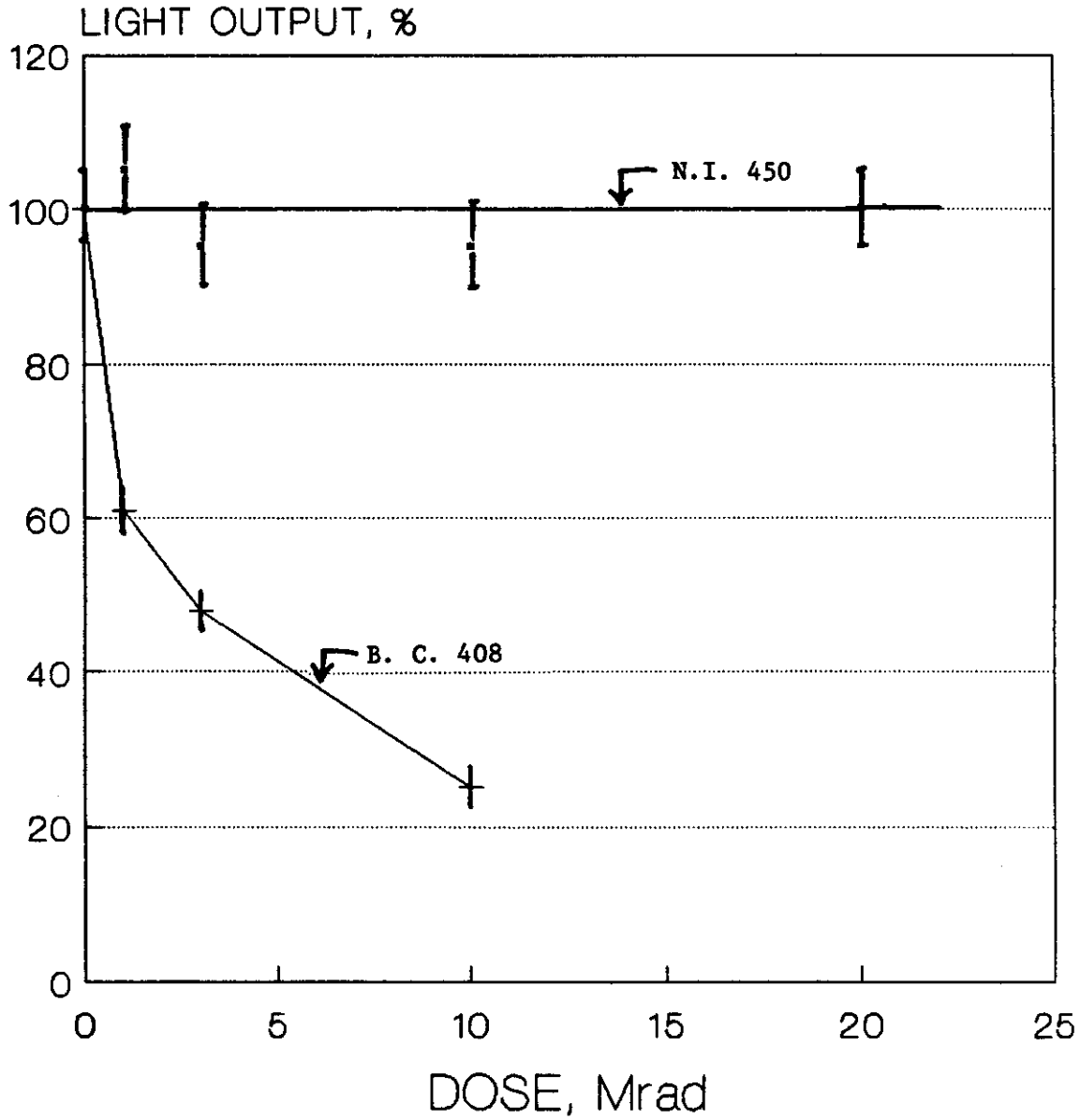

N.I. 450 - Nanoptics, Inc. scintillator emitting at 450 n.m. ; 1.5 cm^3

B.C. 408 - Bicron Corp. scintillator emitting at 408 n.m. ; 1.5 cm^3

Fig. V

ABSORPTION OF THE SECONDARY DYE AT THE EMISSION WAVELENGTH

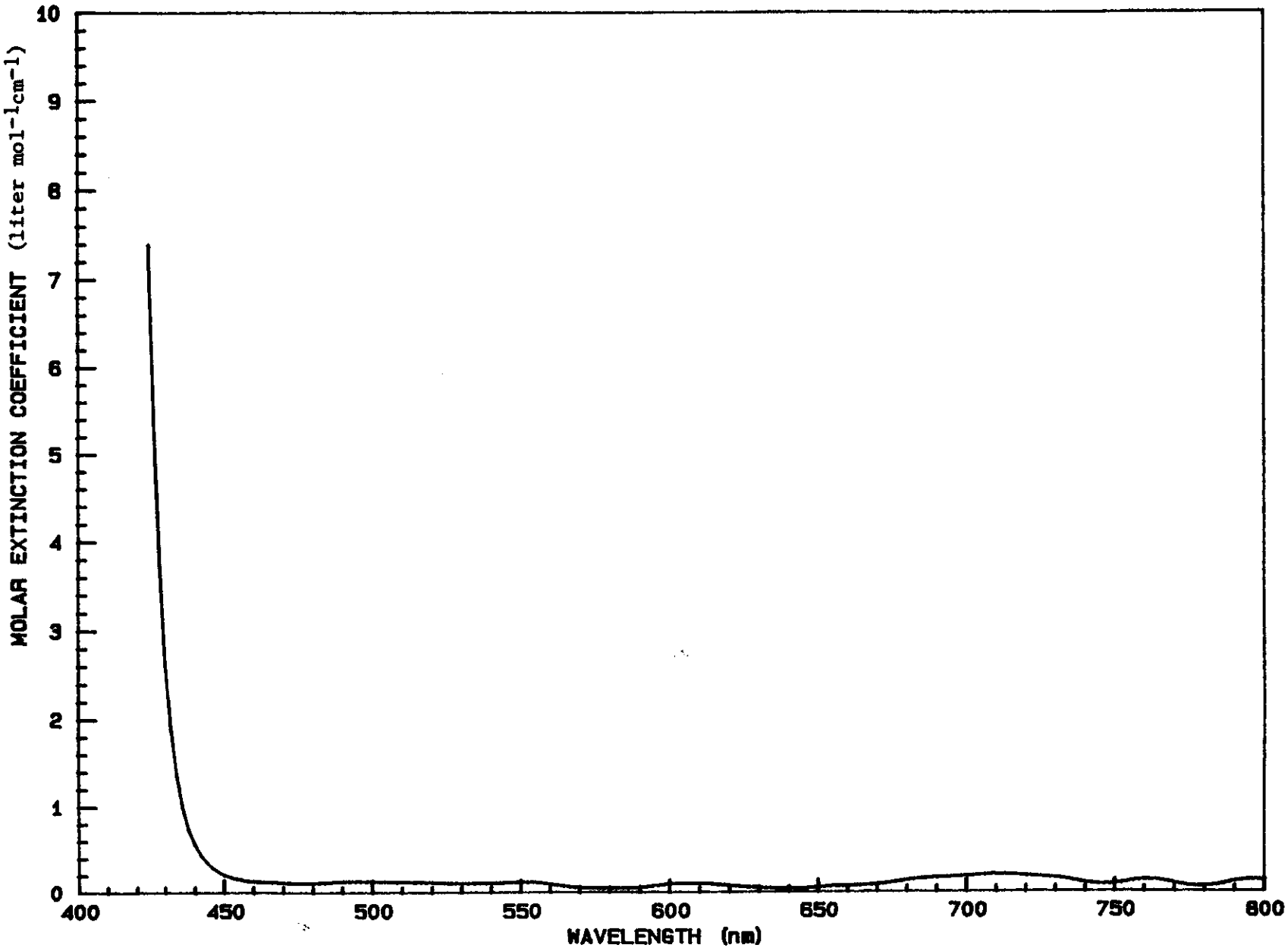

FIGURE VI

APPENDIX I

NANOPTICS INCORPORATED

UNIVERSITY OF FLORIDA
Research & Technology Park
One Progress Boulevard, Box 37
Alachua, Florida. 32615
Phone: 904 - 462 - 2094
Fax: 904 - 462 - 3932

Nanoptics, Inc., is a Florida corporation created in 1987 for the purpose of commercialization of advanced nuclear radiation detector technology developed at the University of Florida. This work at the University is supported by the Department of Energy at over $300,000 per year. The technology has application in a broad range of advanced nuclear detectors used in the five billion dollar Superconducting Super Collider to be built in Texas, and other atom smashers around the world. There is also a growing need for these detectors in other applications such as health physics, waste monitoring, nuclear safeguards, environmental protection and process control. The three principal unique attributes of the plastic scintillator technology of Nanoptics, Inc., are:

1. the extreme resistance to degradation of the plastic from massive amounts of radiation. In this regard, the product is about one hundred times better than previous material.
2. the plastic can be formulated to be flexible and easily formed to any shape thereby eliminating expensive machining costs.
3. extreme resistance to environmental hazards such as vapors of aromatic compounds, acids or mechanical stress.

The technology is protected worldwide by a patent. The U.S. government has given ownership of the patent, know how, and practice thereof to the University of Florida under a provision of U.S. law. The University of Florida has negotiated an exclusive worldwide license with Nanoptics, Inc., to practice the patent associated with this technology. In return, for the exclusive licensing rights, Nanoptics, Inc., has provided the University of Florida with a licensing fee, partial payment of patent fees and maintenance fees, part ownership in Nanoptics, Inc., and a royalty payment on all net sales.

Nanoptics, Inc., is financed by private funds of the founders and by the receipt of two Small Business Innovation Research grants received from the National Science Foundation and the Department of Energy. In addition, negotiations are proceeding to receive venture capital funds. Nanoptics, Inc., is located at the Progress Center, One Progress Boulevard, Alachua, Florida in the heart of the rapidly expanding University of Florida Research and Technology Park. The same building houses the University's Advanced Materials Research Center (AMRC) laboratory, thereby assuring ready access to AMRC equipment and staff. The Material Science Department has an inventory of $5,000,000 of advanced materials analysis and characterization equipment and a fully trained technical staff.

Nanoptics, Inc., has a management, technical staff, and consultants with many years of experience in high technology materials development, polymer chemistry and fluorescent compounds. Dr. James K. Walker serves as the corporation's President and Principal Scientist. Dr. Ken Wagener serves as Chief Chemist and Dr. Julie Harmon as Chief Materials Scientist. The corporation has a consulting committee of distinguished scientists from industry and several Universities. A Board of Directors is being formed at this time. The composition of this Board will include representation from the sources of venture capital.

APPENDIX II

HRD
Hills Research & Development
Fiber Extrusion Systems

7785 Ellis Rd.
West Melbourne, Florida, USA 32904
Phone: (407) 724-2370
Fax: (407) 676-7635
Telex: 469353

September 13, 1989

Drs. Julie Harmon & Jamie Walker
University of Florida
Department of Physics
210 Williamson Hall
Gainesville, FL 32611

Subject: Bi-Component Monofil
Quote 1511A

Dear Drs. Harmon & Walker:

We enjoyed your recent visit and were impressed by your novel approach to the production of optical fibers.

We have given considerable thought to the design of your bi-component spinning machine.

Appended you will find a detailed Equipment Description for the equipment that we envision. Please be aware that this design is in an evolutionary stage and could change as more of these concepts go through the design process. However, we are comfortable with this as a good first step on which we can base a reasonable cost estimate. Please read the Equipment Description carefully to ensure that we have properly understood your needs.

PRICE

Our price for a machine exactly as described in ED 1511A is $159,000.
This price is FOB Melbourne and is good for 90 days.

We recommend the purchase of some spare parts with this machine. In your case, you are fairly accessible to HRD and we can support you rather easily with commonly available parts. We suggest that you purchase only spare parts having long delivery or inexpensive so that you will be able to minimize downtime to have them on hand for immediate replacement. We have not developed a specific list of these parts but past experience suggests that 5% of the machine purchase price would be a reasonable allowance.

SCHEDULE OF PAYMENTS

15% with Purchase Order
25% midpoint between P.O. and shipment
35% two months before shipment
25% at shipment Net 30 days after the customer has verified acceptable mechanical and electrical operation of the machine.

DELIVERY

Normal delivery for this kind of equipment is six to eight months. However, this is very dependent upon the workload within HRD. Delivery dates should be confirmed at the time of order placement.

We hope that you find this information clear and acceptable. If you have any questions, please do not hesitate to call me.

We look forward to working with you on this very interesting and exciting project.

Yours faithfully,

William R. Baker

William R. Baker

Enclosure

EQUIPMENT DESCRIPTION

Research Bi-Component Monofilament Spinning Machine

ED 1511A

September 1989

* * * *

GENERAL

This document describes a synthetic fiber spinning machine designed to carry out research into large diameter bi-component monofilaments.

This machine uses two one-inch diameter extruders and will produce one strand of water quenched monofilament bi-component material. Because of the research nature of this product, we can not say what the basic throughput limitation will be. However, each extruder will be capable of 12 pounds per hour (based on polypropylene). Extrusion temperatures are controllable over the range ambient up to 300 degrees C. The water quench bath is capable of handling at least two filaments and the take-up, one filament at speeds up to 150 meters per minute. This speed is equivalent to 15.5 pounds per hour for a 1mm diameter filament of density of 1 gm/cc. While the winder and spin pack is designed for one single strand, this could easily be expanded to at least two by future changes or additions to the spin packs, guides, and winders at nominal cost.

DETAIL

This machine will consist of:

One conventional chip hopper 0.7 cu. ft. with window, slide gate valve, and nitrogen injection nozzle.

The hopper for the second extruder will require a crammer feeder arrangement. While this is not yet defined, $1,000 direct cost to HRD is allowed in the estimate.

EXTRUDERS, Qty. (2) - 1" 24.1 with 3 HP Wertec brushless DC motors, three heat zones but no cooling blowers. Screw design will be finalized later to be appropriate for the high viscosity liquid and flouropolymer feeds.

PUMP HEADS, Qty. (2) - This unit is mounted directly on the extruder. It carries a meter pump on its upper surface and connects the metered feed materials to a transfer line to the spin heads.

EQUIPMENT DESCRIPTION
Research Bi-Component Monofilament Spinning Machine

METER PUMPS & DRIVES, Qty. (2) - Meter pump will be 2.92 cc/rev. polymer pump. This will pump 3-15.4 pounds per hour corresponding to 8-40 RPM and assuming a melt density of 1. Drive system will use a 1/2 HP variable speed motor with inverter and a 40:1 gearbox.

POLYMER TRANSFER LINE carries the molten material from the pump to the spin head. It will be electrically heated to maintain liquid temperature and to protect against freezing when the polymer flow is stopped.

SPIN HEAD - This unit carries one bottom loaded spin pack and brings the two melt streams together into the spin pack. It is electrically heated and is arranged to permit easy installation and removal of the spin pack.

SPIN PACKS, Qty. (3) - These will provide filtration and proper channeling to bring the polymers together in a sheath/core format. Melt filtration media will be sintered metal needles of a filtration pore size yet to be determined. The needles can be changed either for cleaning or to change the filtration level.

Each pack will make one strand.

WATER QUENCH - The molten strand will be extruded into a water bath placed beneath the spinneret. This bath can be rolled away for pack changing and maintenance. It will be placed as close as practicable beneath the spinneret. For string-up, the water level will be lowered but can be raised to the highest level practicable within the tank for normal operation. Appropriate guides will be placed in the bath and the whole tank can be raised or lowered as needed. Provisions will be made for water heating, cooling, and recirculation.

DENIER CONTROL - Strand speed, thus, diameter, will be varied by changing the speed of a polished denier control roll. The speed of this roll will be adjustable over the range 20-150 MPM. The monofilament will be held against the denier roll with a rubber coated cot roll. Surplus water can be removed with a sponge.

WINDER - This will be a spool-type unit which uses a flanged tube with about 11" maximum diameter, 5" diameter on the core and a traverse stroke of 8".

FRAME - The extrusion system will be supported on a floor mounted frame. This frame will be designed so that the spinneret face will be at about four feet above floor level.

This is a compromise to permit spin pack changes with some minor difficulty but places the upper water level at a reasonable height to manipulate the strand in the water bath.

Frame construction will be painted rectangular tubing with covers and faceplates as appropriate.

EQUIPMENT DESCRIPTION
Research Bi-Component Monofilament Spinning Machine

INSTRUMENTATION - Instruments and controls will be located in a freestanding metal cabinet located near the extrusion frame. Operator controlled instruments will be mounted on the front doors of the cabinet. Most of the power output devices are on the rear of a double sided panel and are accessible through rear opening doors.

Controls will be:

Raw Material Feed
- Crammer feeder on/off

Extruders (2)
- Three heat zones, temperature controllers
- Pressure controller

Pump Heads (2)
- Temperature controller
- Block temperature indicator
- Pump speed indicator
- Pump speed control
- Polymer outlet pressure

Transfer Lines (2)
- Temperature controller

Spin Head
- Temperature controller
- Block temperature indicator
- Polymer temperature indicator (2)

Water Tank (all controls on tank)
- Temperature controller
- Circulation pump on/off

Godet
- Speed controller
- Speed indicator

Winder (local to winder)
- Speed controller
- Speed indicator

EQUIPMENT DESCRIPTION
Research Bi-Component Monofilament Spinning Machine

CONTROLS

GENERAL

- Temperature controllers will be Barber Colman 580AT or equivalent.
- Heat zones are powered by solid state relays.
- Pressure controllers, indicators, and transducers will be Dynisco or equivalent.
- All rotating systems are equipped with illuminated start pushbuttons of industrial grade oil tight construction.
- Wires will be individually labeled with wraparound labels and connection terminals will be numbered using the HRD numbering system.
- Instruments will be calibrated in degrees centigrade, meters per minute, pounds per square inch and inches water gauge, unless specifically requested otherwise.
- The choice of other instrument types is acceptable at the customer's option. Some adjustment in price may be necessary for this.

MISCELLANEOUS

Includes a roll removal fixture for HRD manufactured roll.

Includes spin pack installation tool.

This system will operate properly with 230V, 60 Hz, 3 PH input power. Other voltages can be accommodated but may incur a price increase.

ASSEMBLY & INSTALLATION

The machine will be fully assembled and tested in Melbourne. The customer is invited to witness this. It will be dismantled the necessary amount for shipment. The only installation costs to be anticipated are moving the machine to work location, reassembly of parts removed for shipment, and connection to electrical and water services as needed. This is the responsibility of the customer.

INFORMATION

Included with this machine will be three sets of electrical, assembly and subassembly drawings, a Bill of Materials identifying all components, and one copy each of all vendor data provided with major instruments and purchased equipment.

APPENDIX III

KILLION

☐ KILLION EXTRUDERS, INC.
Main Headquarters:
200 Commerce Road
Cedar Grove, NJ 07009
Telephone: (201) 239-0200
Telex: 133560
Fax: 2012393061

☐ KILLION EXTRUDERS, INC.
Florida Plant:
3635 Fiscal Court
Riviera Beach, FL 33404
Telephone: (407) 845-8660
Telex: 803407
Fax: 4078484837

QUOTATION NUMBER: #9-092207-7

TO: Julie Harmon
University of Florida
210 Williamson Hall
Gainsville, FL 32611
904-392-8863

TERMS:

- Standard payment schedule for built-to-order equipment for customers with approved credit is:
  - 1/3 With Order
  - 1/3 Prior to Shipment
  - 1/3 Within 30 Days of Shipment
- Unpaid balances over 30 days will be charged interest at a rate of 1.5% per month (18% per annum)
- All first-time customers are required to establish their satisfactory credit with us prior to our beginning work on an order. Credit will be extended based on acceptable bank and trade references extending credit equal to or in excess of the initial order with our company. Letters of credit or sight drafts may be required

PRELIMINARY QUOTATION

PRICES ARE FIRM FOR 30 DAYS FROM THIS DATE: 09/22/89

---

(1) A-B-A Coextrusion Combining Adaptor per attached specifications and drawing $009-090

Price $ 8,340

(1) 6" wide adjustable lip film die per attached specifications and drawing #013-061, includes:

-Coat hanger design
-Alternate entry post
-Chrome plated

Price $ 3,075

(1) Adaptor and flange assemblies for Killion 1" extruder constructed of stainless steel per drawing #009-001

Price $ 280
Each

(1) Laboratory chill roll stand per attached specifications and drawing #002-097. Includes the following features:

A. 1 HP DC drive system

B. 7V/1000 RPM tach feedback on DC drive (+/- 1% speed regulation)

C. 8" dia. x 8" wide single shell chrome plated chill roll

D. 5" dia. x 8" wide pull rolls

-(1) chrome plated
-(1) rubber coated

KILLION

E. 20 to 1 ratio gear reducer with timing belt drive. Approximate speed range using 1 to 1 ratio belt and pulley set is 12 to 114 FPM

NOTE: Other speed ranges available

Price $11,300

NOTE: Killion offers a 10% discount off above list prices to all qualified educational institutions.

DELIVERY DATE: Approx. 8 weeks after receipt of written order and settlement of all pertinent details.

SHIP VIA: Best Way

F.O.B.: Cedar Grove, NJ or Riviera Beach, FL

SIGNED: _____
Paul Nardone
Senior Sales Engineer

This quotation is offered subject to all of the terms and conditions on the reverse side of page 1.

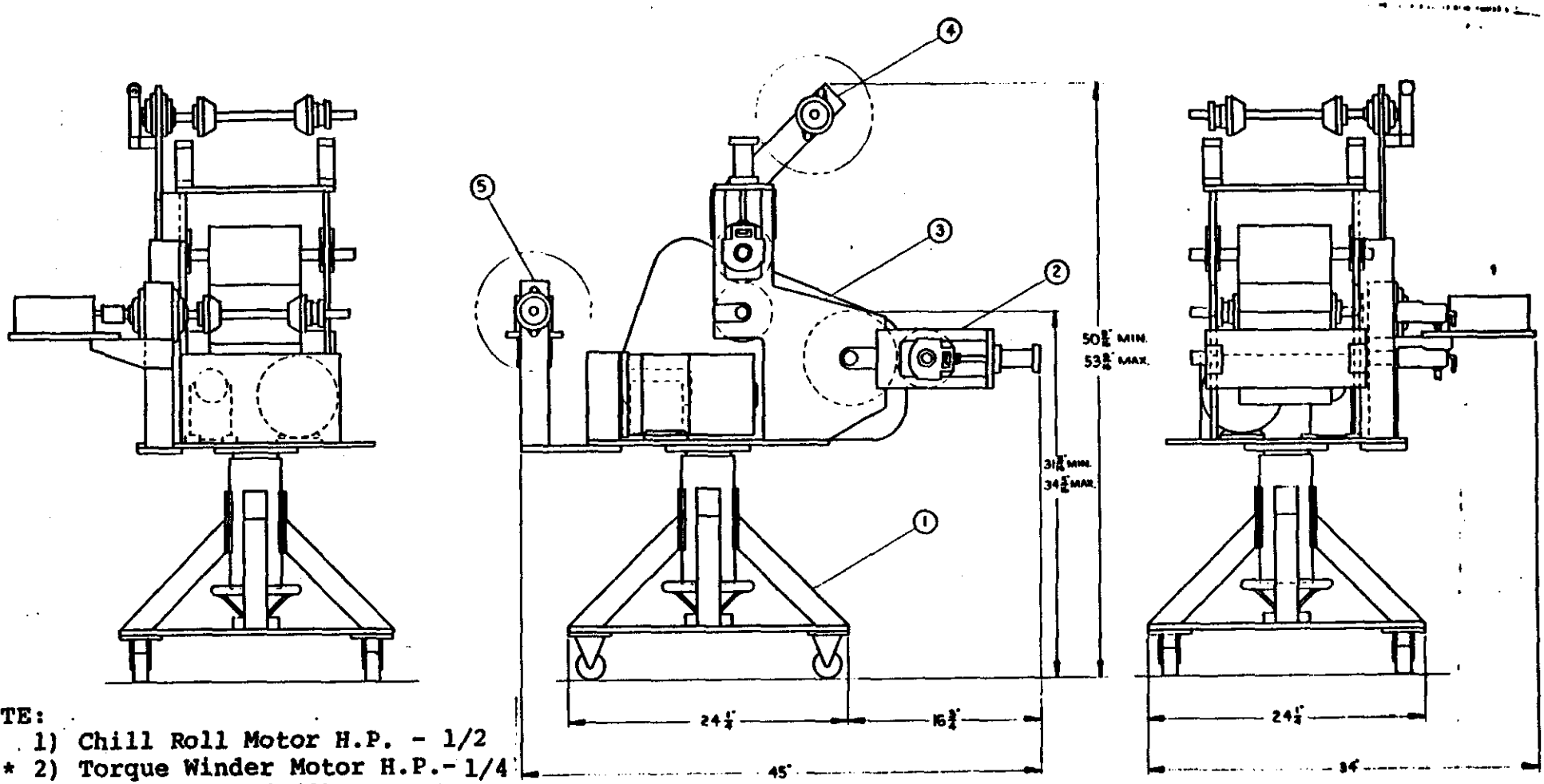

NOTE:

1) Chill Roll Motor H.P. - 1/2
* 2) Torque Winder Motor H.P.- 1/4
3) Max. speed of (3) Step-Cone Pulley, Ratios are:
   377 (F.P.M.)
   188 (F.P.M.)
   94 (F.P.M.)
4) Input Power 230/1/60
5) Chill Roll Size, 8" Dia. x 8" Face
6) Motor Controls, Air Controls, Winder Controls. Not shown for Clarity.

* EXTRA COST OPTIONS

DESCRIPTION	ITEM
* TORQUE WINDER SUB ASSY.	5
* PAY-OFF SUB ASSY.	4
BENCH TOP CHILL ROLL UNIT	3
* NIP ROLL SUB ASSY.	2
LIFT BASE	1

DO NOT SCALE DRAWING
CONFIDENTIAL NOT TO BE REPRODUCED OR USED IN ANY WAY WITHOUT WRITTEN KILLION, INC. APPROVAL

TOLERANCES UNLESS NOTED
FRACTIONAL ± 1/64
ANGLE ± 30'
DECIMAL .XX ± .010
.XXX ± .005
.XXXX ± .0005
THREADS CLASS 2A EXT 2B INT
ALL MACHINED SURFACES
SURFACE FINISH 63 UNLESS

MATERIAL
FINISH OR TREATMENT
NEXT ASSY

KILLION EXTRUDERS, INC.
VERONA N.J. — POMPANO BEACH FLA.

TITLE- CHILL ROLL WITH ACCESSORIES
APPLICATION-
CUSTOMER-
DR BY- [illegible]
CK BY-
SCALE- 1/4
DATE- 3-30-82
REV
DWG. NO. D-002-097
SHT 1 OF 1

REV.	DESCRIPTION	BY	DATE
A	ADDED ITEMS 15-18 ELECTR. CENTER PL. ; ADDED DWG. VALL. CONN.	[illegible]	2-6-85
B	REDRAWN & ADDED CENTER PLATE SCHEDULE, ITEM 12 MOVED TO SCHEDULE	[illegible]	4-24-85

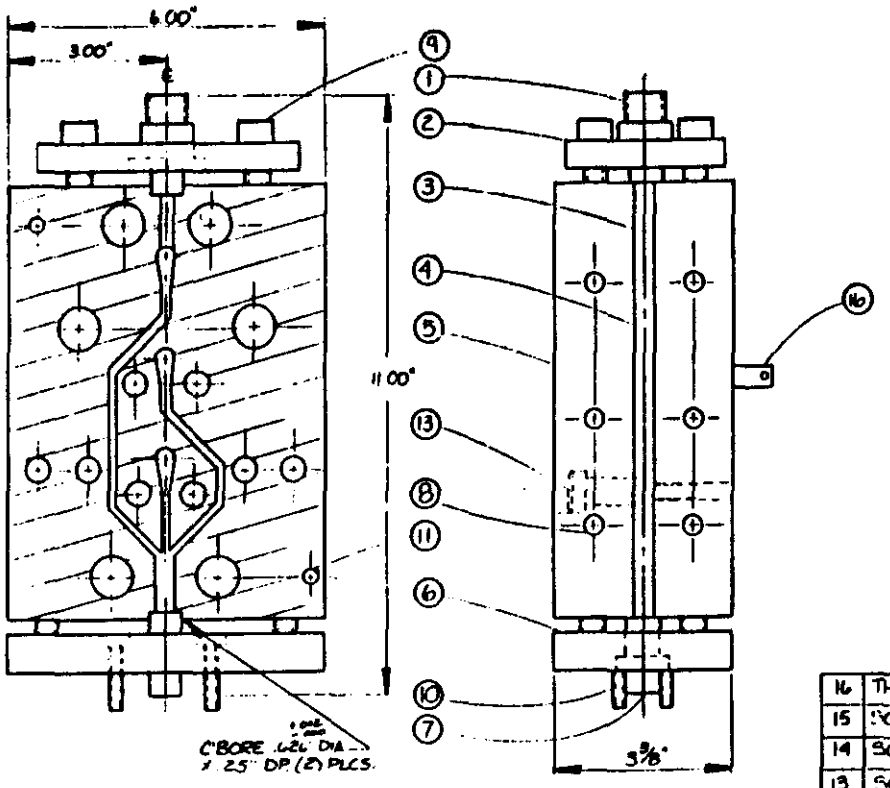

NOTE:

(1) C'BORES MACHINED WHEN PLATES ASSEMBLED.
(2) CARTRIDGE HEATERS MUST HAVE FLEX. ARMOR LEADS.

NO.	DESCRIPTION	DWG. NO.	QTY.
16	THERMOCOUPLE ADAPTER	1/8"-27 NPT x 1" LG	1
15	SOC HD CAP SCR 7/16"-14 x 3 5/8" LG.		6
14	SOC HD CAP SCR. 3/4"-16 x 2 3/8" LG		6
13	SOC HD SHLD SCR 1/2" x 1 1/4" LG.		2
12			
11	1/4" DIA DOWEL PIN x 1 1/2" LG		2
10	SOC HD CAP SCR. 1/4"-20 x 1 1/4" LG		4
9	SOC HD CAP SCR. 7/16"-14 x 1 3/4" LG		8
8	CARTRIDGE HEATERS 5/8" Φ x 6" LG	240V/500W	6
7	ADAPTER (SQ. HOLE)	B-009-087	1
6	PLATE	B-009-087	1
5	CLAMP PLATE (LEFT)	C-004-542	1
4	CENTER PLATE	SEE SCHEDULE	1
3	CLAMP PLATE (RIGHT)	C-004-543	1
2	ADAPTER PLATE	A-004-549	1
1	ADAPTER	A-009-089	1

CENTER PLATE SCHEDULE	DWG NO
A 1/2 B 8/8 A 1/2	D-004-566-003
A 2/5 B 1/5 C 2/5	D-004-566-002
A 2/5 B 2/5 C 2/5 A 2/5 B 2/5	D-004-566-001
A-90% B-10%	D-004-566
A-40% B-20% A-40%	D-004-546
A-33% B-33% C-33%	D-004-544

DO NOT SCALE DRAWING
CONFIDENTIAL: NOT TO BE REPRODUCED OR USED IN ANY WAY WITHOUT WRITTEN KILLION, INC. APPROVAL

TOLERANCES: UNLESS NOTED
FRACTIONAL: ± 1/64
ANGLE: ± 30'
DECIMAL: .XX ± .010
.XXX ± .005
.XXXX ± .0005
THREADS CLASS 2A EXT 2B INT
ALL MACHINED SURFACES
SURFACE FINISH 63 UNLESS OTHERWISE SPECIFIED

MATERIAL
FINISH OR TREATMENT
NEXT ASSY.

KILLION EXTRUDERS, INC.
VERONA, N.J. —— POMPANO BEACH, FLA

TITLE- COMBINING ADAPTER
APPLICATION-
CUSTOMER-
DR. BY- [illegible]
CK. BY-
REV. B
DWG. NO. C-009-090
SCALE- NTS
DATE- 12 26 84
SHT. 1 OF 1

REV.	DESCRIPTN	BY	DATE
A	SEE ECO 1117		
B	SEE ECO 1255		

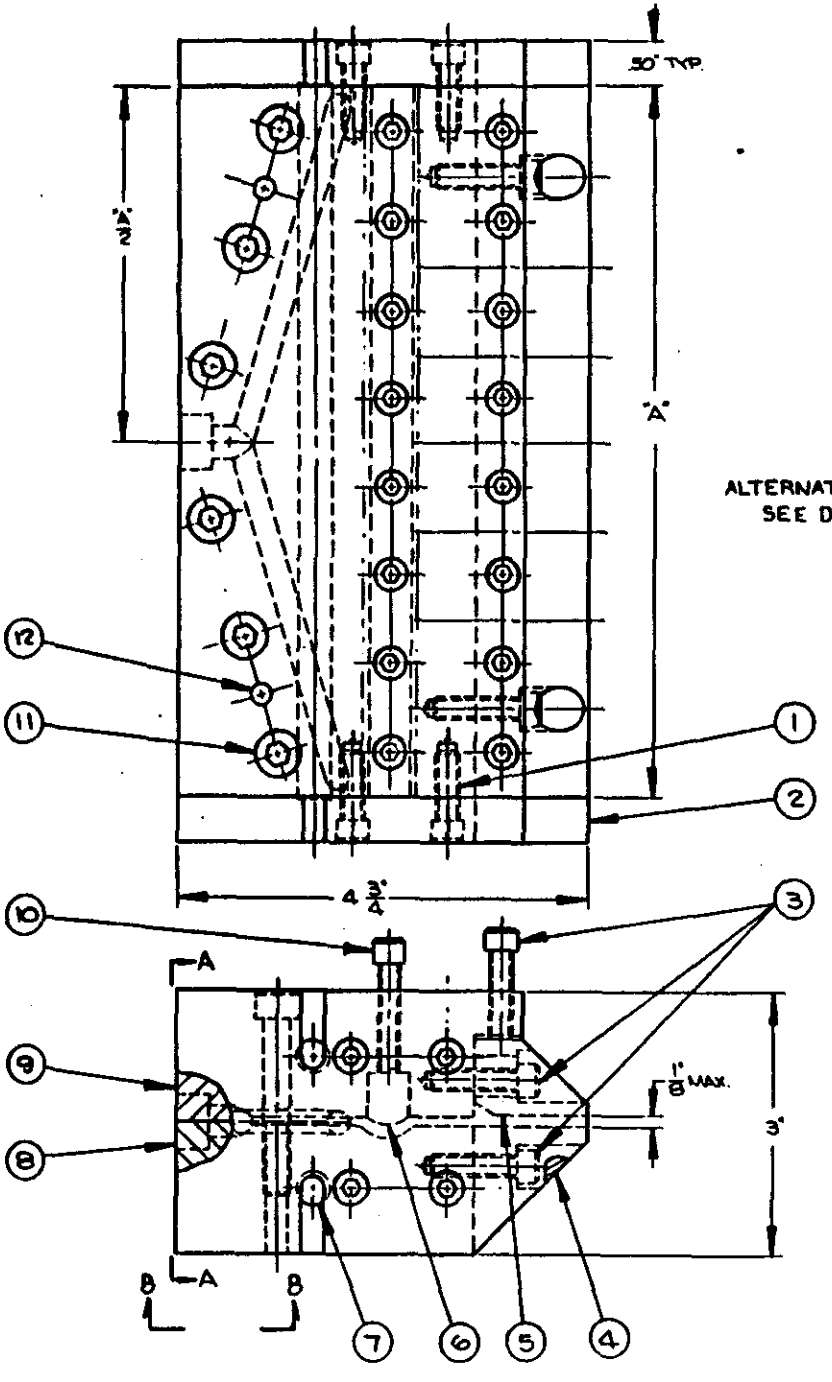

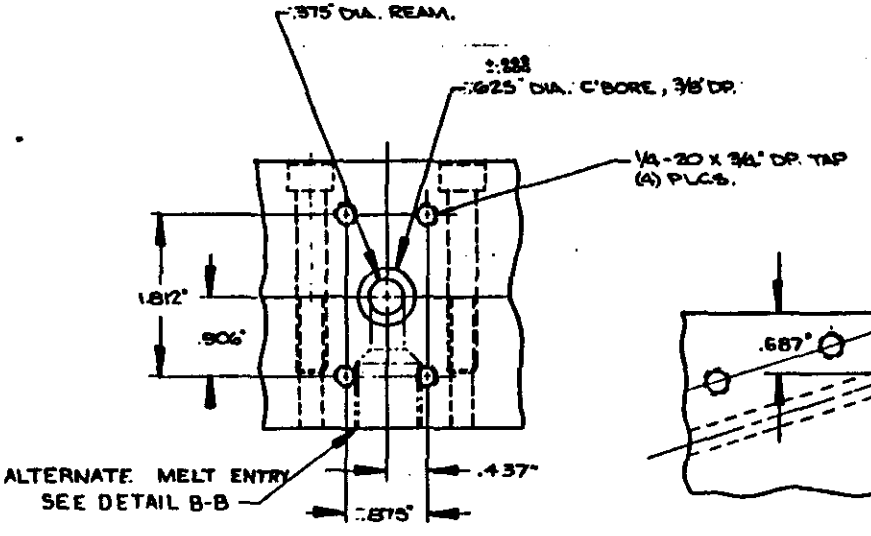

DET. A-A

DET. B-B
ALTERNATE MELT ENTRY

				A-110-190	8"
				A-110-191	6"
					4"
				B/M NUMBER	DIE SIZE
	2	2	2	DWL. PIN	12
	6	6	4	SOC. HD. CAP SCR.	11
	8	8	4	SOC. HD. CAP SCR.	10
	1	1	1	ADJUST. DIE BODY BLOCK	9
	1	1	1	FIXED DIE BODY BLOCK	8
	2	2	2	CARTRIDGE HEATER	7
	1	1	1	CHOKER BAR	6
	1	1	1	ADJUSTABLE LIP	5
	1	1	1	FIXED LIP	4
	22	20	11	SOC. HD. CAP SCR.	3
	2	2	2	END PLATE	2
	8	8	8	SOC. HD. CAP SCR.	1
QUANTITY				DESCRIPTION	ITEM
	8"	6"	4"		

DIE SIZE (DIM. "A")

FINISH OR TREATMENT

TOLERANCE UNLESS NOTED
FRACTIONAL - ± 1/64
DECIMAL - ± .005
ANGULAR - ± 1/2°

NEXT ASSY.

KILLION EXTRUDERS, INC.
VERONA, N. J. — POMPANO BEACH, FLA.

TITLE - SHEET DIE W/CHOKER BAR

APPLICATION -

CUSTOMER -

DR. BY - MOLINA, H.R.

CK. BY -

REV. B

DWG. NO. 013-061

SCALE - FULL | DATE - 10-6-77 | SHT. 1 OF 1

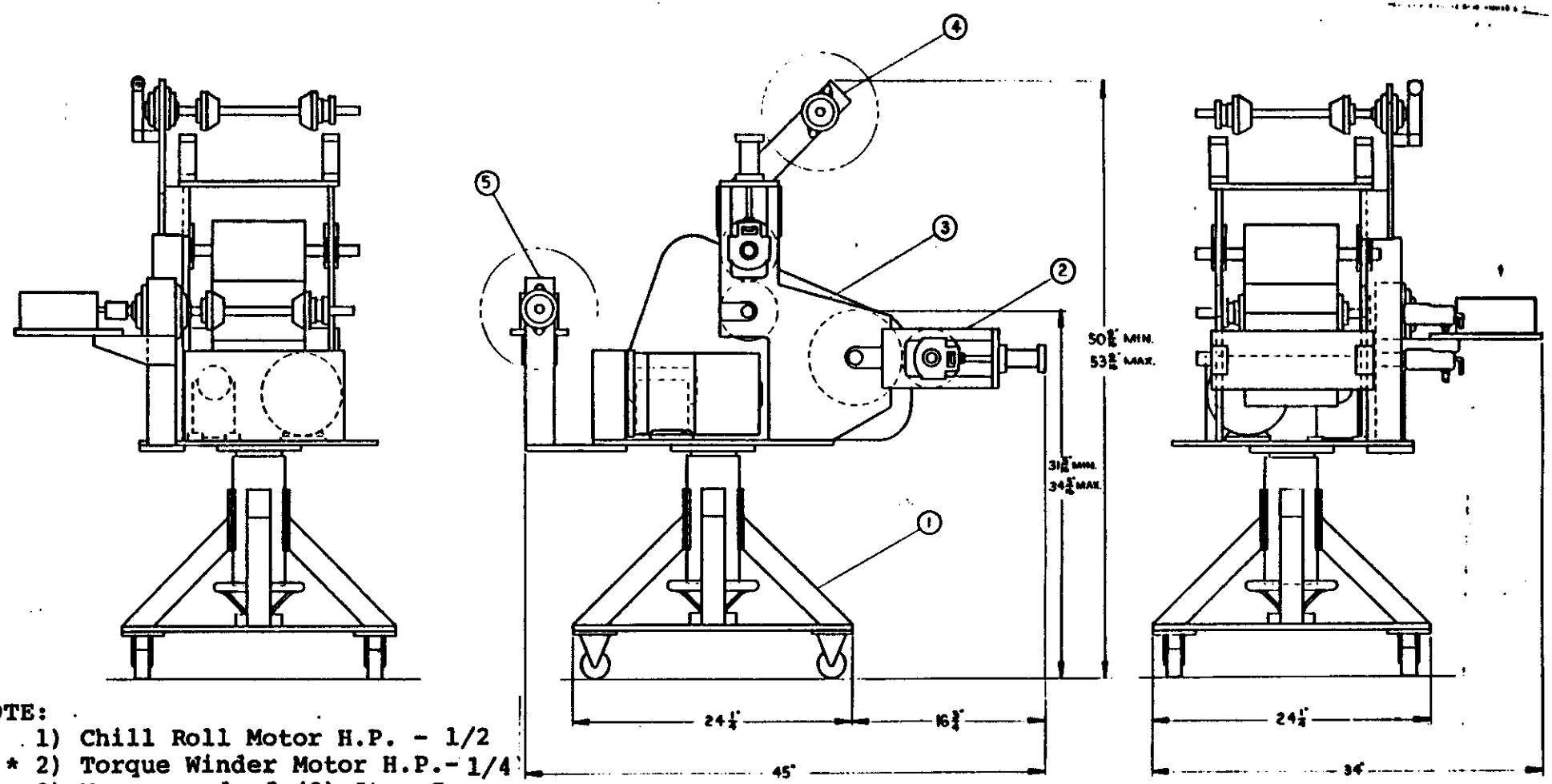

NOTE:

1) Chill Roll Motor H.P. - 1/2
* 2) Torque Winder Motor H.P.- 1/4
3) Max. speed of (3) Step-Cone Pulley, Ratios are:
   377 (F.P.M.)
   188 (F.P.M.)
   94 (F.P.M.)
4) Input Power 230/1/60
5) Chill Roll Size, 8" Dia. x 8" Face
6) Motor Controls, Air Controls, Winder Controls. Not shown for Clarity.

* EXTRA COST OPTIONS

DESCRIPTION	ITEM
* TORQUE WINDER SUB ASSY.	5
* PAY-OFF SUB ASSY.	4
BENCH TOP CHILL ROLL UNIT	3
* NIP ROLL SUB ASSY.	2
LIFT BASE	1

DO NOT SCALE DRAWING
CONFIDENTIAL NOT TO BE REPRODUCED OR USED IN ANY WAY WITHOUT WRITTEN KILLION, INC. APPROVAL

TOLERANCES UNLESS NOTED
FRACTIONAL ± 1/64
ANGLE ± 30'
DECIMAL .XX ± .010
.XXX ± .005
.XXXX ± .0005
THREADS CLASS 2A EXT 2B INT
ALL MACHINED SURFACES
SURFACE FINISH 63 UNLESS OTHERWISE SPECIFIED

MATERIAL
FINISH OR TREATMENT
NEXT ASSY.

KILLION EXTRUDERS, INC.
VERONA N.J. — POMPANO BEACH FLA.

TITLE- CHILL ROLL WITH ACCESSORIES
APPLICATION-
CUSTOMER-
DR. BY- [illegible]
CK. BY-
REV
DWG. NO. D-002-097
SCALE- 1/4
DATE- 3-30-82
SHT 1 OF 1

KILLION EXTRUDERS, INC.

Laboratory Chill Roll Stand

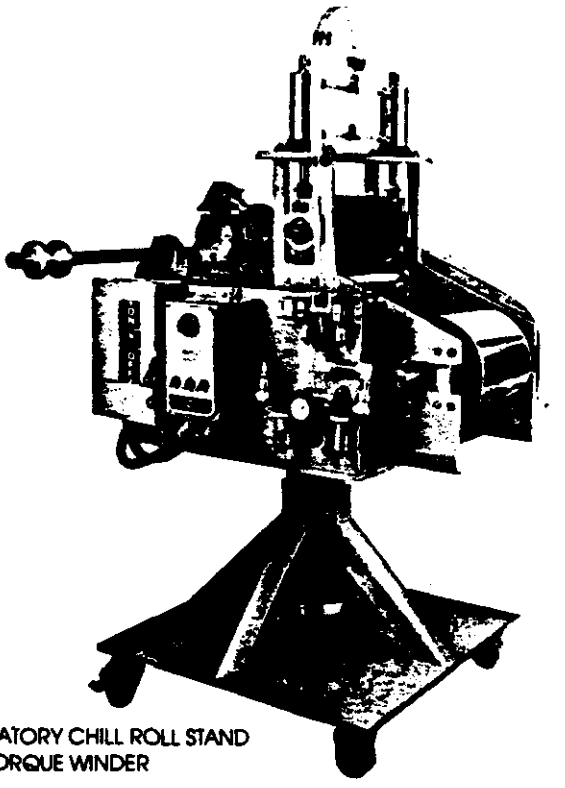

LABORATORY CHILL ROLL STAND
WITH TORQUE WINDER

Killion's laboratory chill roll stand will produce high quality cast film using up to an 8 inch film die mounted on an extruder up to 1-1/2 inches.

This laboratory chill roll stand has been designed to cast a wide range of materials in film thickness normally ranging from .0005 to .010 inches while maintaining tight tolerance control. Its unique design offers flexibility for a broad range of laboratory and quality control applications such as: inspection for gels or fish eyes, samples for physical properties testing, color matching and compound or additive development.

Larger chill roll stands featuring larger roll sizes and higher horsepower drives are available for use with extruders from 1-1/2 to 2-1/2 inches. Also, any of the units can be modified to include pay-off units and auxiliary nip roll assembly *for laminating; special roll configurations or platings and wind-up unit.*

SPECIFICATIONS

Pay-Off Assembly

- Chill roll with 8 inch diameter by 8 inch face width. This single shell roll is chrome plated, has a mirror finish, is cored for water cooling and is equipped with a rotary joint.
- Two pull rolls with 5 inch diameter by 8 inch face width:
  - One neoprene rubber roll (65-70 Durometer).
  - One chrome plated roll, cored for water cooling and equipped with rotary union.
  - Roll pressure is controlled by air cylinders. An air filter/regulator/lubricator unit is supplied.

Drive System

- 1/2 HP DC motor.
- 20:1 reducer.
- *Timing belt between the motor and reducer.*

Controls

- SCR motor speed control with ON/OFF and potentiometer.
- Air pressure regulating controls.
- 4 way valve.
- All controls are conveniently mounted on base.

Machine Construction

- Fabricated steel frame mounted on base plate.
- Bottom base assembly with height adjustment by means of hand crank (± 1-1/2 inches).
- Unit mounted on four casters with locks.
- Approximate weight 600 pounds.
- Approximate dimensions 28 inches wide by 29 inches long by 56 inches high.

Utilities

- Electrical hook up calls for 230 volts/1 phase/50 or 60 cycles and approximately 4 amps.
- 100 PSI air pressure for air controls.

Optional Features

Killion's laboratory chill roll stand can be modified in a number of ways including:

- Wider roll width up to 14 inches.
- Pay-off sub-assembly unit with manual tension control.
- Nip roll sub-assembly unit; air pressure loaded.
- Single shaft torque winder unit, driven by 1/4 HP torque motor with variable tension control.
- Other operating speed ranges.
- Double shell, spiral baffled rolls.
- Other roll platings.
- Digital FPM indicator.
- Tach feedback.

FOR MORE INFORMATION - CONTACT:

KILLION EXTRUDERS, INC.

- 56 Depot Street, Verona, New Jersey 07044 • (201) 239-0200, Telex: 133560
- 3635 Fiscal Court, Riviera Beach, Florida 33404 • (305) 845-8660, Telex: 803407