SSC PE-026
40 PAGES

WARM LIQUID CALORIMETRY LARGE SUBSYSTEM PROPOSAL

B. Aubert, J. Colas, P. Ghez, J. -C. Lacotte, J. -C. Lemarec, and P. Petitpas
Laboratoire d'Annecy-le-Vieux de Physique des Particules

J. Bensinger
Brandeis University

W. Edwards, R. Jared, P. Limon, M. Pripstein*, M. Strovink, T. Weber,
W. A. Wenzel, and R. Wolgast
University of California, Berkeley and Lawrence Berkeley Laboratory

L. Dobrzynski, D. Kryn, J.P. Mendiburu, and P. Salin
Laboratoire de Physique Corpusculaire du Collège de France

D. Theriot
Fermi National Accelerator Laboratory

J. Womersley
Florida State University

G. Brandenburg, S. Geer, J. Oliver, and E. Sadowski
Harvard University

R. Kikuchi
Kyoto University

K. Miyano
Niigata University

R. Hollebeek, R. VanBerg, M. Newcomer
University of Pennsylvania

Ph. Lavocat, B. Mansoulie, S. Palanque, and J. Teiger
CEN Saclay

K. Matsuda
Saitama College of Health

K. Abe, K. Hasegawa, F. Suekane, H. Yuta
Tohoku University

M. Higuchi, Y. Hoshi
Tohoku Gakuin University

October 2, 1989

* Contact person

Table of Contents

Summary
- Goals of Warm-Liquid Calorimetry Large Subsystem R&D
- Motivations for Pursuing Warm-Liquid Calorimetry

Critical Issues and Present Status of the R&D
- Purification, Cleanliness, and Long-Term Stability
- Radiation Resistance
- Material Compatibility
- Fast Signal Response and Signal-to-Noise
- Electron-Hadron Signal Compensation (e/h)
- Engineering Studies of a Large Hermetic Calorimeter

The Large Subsystem R&D Program
- Design and Fabrication of a Test Beam Module
- Engineering Studies of an Integrated Calorimeter
- Manpower, Level-of-Effort, and Schedule
- Cost Estimate of R&D for Fiscal Year 1990
- Comments on Fiscal Year 1991
- Beam Requirements for the TBM Test

Appendix
- The EG&G Report of a Large Hermetic Calorimeter

1. Summary

This proposal supports two goals intended to advance the the understanding of the systems-related issues of warm-liquid calorimetry and a detector based on that technology:

1. The design, fabrication, and beam test of a large warm-liquid calorimeter test beam module (TBM) in a "swimming-pool "configuration (i.e., absorbers inside a liquid volume), that meets safety, hermeticity, hadronic compensation, resolution, and time response requirements for an SSC detector.
2. A significant effort to design a realistic warm-liquid calorimeter integrated into an SSC detector, in order to understand the effect of the technology on the detector and the physics.

The warm-liquid calorimetry concept is very promising, but is unproven for use in a large calorimeter system. We propose a very aggressive time scale for constructing and testing the TBM, while at the same time using as many of the features that we envision being used in an actual calorimeter for an SSC detector, such as the "electrostatic transformer" readout, fine transverse segmentation in a tower configuration, and materials that lend themselves to efficient mass production techniques.

Because of the very short time-scale, a major technical and fiscal effort is needed. Even so, a realistic design and construction schedule requires about 14 months for TBM construction, and 16 months to be ready for operation in a test-beam — that is, in early 1991 if the design and fabrication starts at the beginning of fiscal year 1990. This schedule assumes that some critical assumptions are made early in the design phase of the TBM, before all of the R&D is complete, and requires that significant parallel efforts be pursued, so that unexpected results in the R&D program will not cause unacceptable delays.

It would be most convenient and efficient for us to perform these measurements in the same test beam (MT, at Fermilab) as we are using in experiment T-795 (the test of warm-liquid modules starting this winter). We expect that the first phase of the run, a "proof-of-principle" will require about three months. Improvements and further tests might take another three months, resulting in completion in the late summer of 1991.

The other important goal of this proposal, longer-term in scope (three years), is a detailed and comprehensive engineering design study of a full-size warm-liquid calorimeter. This has already started with EG&G[1] under the auspices of the SSC Laboratory and the close guidance of this collaboration, and we are planning to continue in that effort. This work is necessary to understand many of the larger systems issues, the integration of the parts of a complex detector, and the influence of engineering details on the physics

effectiveness of a detector based on warm-liquid calorimetry. Because of the complexity of the task, coupled with the short time-scale for decisions, work on this goal must also begin in earnest in early FY90.

The advantages of liquid ionization calorimetry are well known — direct collection of charge, leading to a stable, well calibrated, and uniform response; flexibility and ease of segmentation in depth as well as surface area; relatively high resistance to radiation; and with the use of recent advances in tower-preamp capacitance matching, insensitivity to strong magnetic fields. A vigorous R&D program pursued worldwide in the past few years has shown that some organic liquids at ambient room temperature (so-called "warm liquids") can make an excellent calorimeter. The yield of electrons by dE/dx, the electron lifetime, and the drift velocity are all comparable in performance with liquid argon. Other features of the warm liquids allow the design of a potentially superior detector. Warm liquids require neither cryogenic equipment nor thermal insulation, resulting in a simpler, more flexible, and more hermetic detector. Furthermore, since warm liquids are hydrogenous materials they provide a compensated output, that is, a more nearly equal response to electromagnetic and hadronic showers, leading to better resolution and linearity over a large energy range, without having to resort to expensive and exotic materials or techniques. All of these advantages strongly suggest that warm liquid calorimetry may result in a more effective and less expensive detector.

The R&D performed up to now has concentrated on the fundamental properties of warm liquids. It is the goal of the R&D described in this proposal to understand the system-related issues of warm-liquid calorimetry and how it fits into and influences a detector and its physics performance. This proposed work is a natural extension of the generic R&D, and is necessary to reach the goal of understanding a total detector based on warm liquid calorimetry.

In conclusion, the immediate goal of this proposal is to provide a major system test of warm-liquid calorimetry by designing, constructing, and testing a large swimming-pool type warm-liquid calorimeter. The design and construction will start in early fiscal year 1990 and be completed in mid-fiscal year 1991. The beam test will then follow and be completed by the end of fiscal year 1991. In parallel, we will continue the engineering design of a full-size detector based on a warm-liquid calorimeter with the help of EG&G, to be completed at the end of fiscal year 1992. This program requires funding of $2 M in fiscal year 1990 for the support of the U.S. groups' effort including EG&G.

2. Critical Issues and the Present Status of the R&D

Some of the challenges of bringing the warm liquid concept to fruition can be investigated with small-scale experiments and design studies. Much of this R&D has been carried out under the aegis of the SSC Generic Detector R&D and is expected to continue in that category. A summary of the work done to date is presented in this section.

2.1. Liquid Purity and Long-Term Stability

Much progress has been made in the production of high-purity warm-liquids, particularly TMP (C_9H_{20}) and TMS ($(CH_3)_4Si$). The ionization electron lifetime in the liquid is very sensitive to impurities. For signal collection to be insensitive to modest changes in the liquid purity, one would like purities corresponding to ionization electron drift lifetimes of better than roughly ten times the signal shaping time of 50 — 100 ns, that is, better than about 0.5 — 1 μs. In this collaboration, the LBL and Saclay groups have achieved lifetimes in TMP of better than 100 μs and 20 μs, respectively, and the College de France and the Penn groups are achieving lifetimes in TMS of about 100 μs and 0.5 μs, respectively. The latter group used very modest cleaning procedures deliberately, for R&D purposes. The Penn result can be easily improved upon. The LBL purification and filling system is designed to handle TMS as well as TMP, and the Saclay group system can be adapted for TMS, if necessary. Thus, liquid purification is tractable.

A related issue is the long-term stability of the liquid purity in a calorimeter container. UA-1 has shown[2] that their earlier TMP samples, with free electron lifetimes of about 15 μs, did not suffer any reduction in lifetime after three years in their sealed calorimeter boxes consisting of stainless steel and ceramic. This stability is much greater than is necessary in the case of a swimming-pool type calorimeter, since we plan to recirculate and repurify the liquid in the modules whenever necessary.

With regard to choice of liquid, most of the R&D effort has focussed on TMP rather than TMS, simply because of the safety issue, since TMP has a much higher boiling point. However, TMS has more desirable signal/noise properties because of its higher mobility. This issue, together with R&D on other possible warm liquids, will be discussed further in the section on fast signal response.

2.2. Radiation Resistance

The most comprehensive study in TMP and TMS to date has been performed by R.A. Holroyd of BNL,[3] in which he exposed the liquids to radiation from an intense Cobalt-60 source, up to doses of 10^5 Grays (i.e. 10^7 Rads). Even for this maximum dose, only about 1% of the liquid suffers from radiolysis decomposition. The conversion products are predominately other saturated and unsaturated hydrocarbons or silanes, which do not attach electrons, and, therefore, do not significantly decrease the free-electron lifetime. The drift velocity of ionization electrons is very nearly unchanged and the electron lifetime in his setup drops from about 60 μs to about one μs at 10^7 rads, which is still quite acceptable. The gas pressure builds up from radiolysis linearly with dose. Since there has to be expansion tanks to accomidate possible teperature changes, the gas build up should not be a problem. In any case, significant radiolisis occurs only at 10^7 Rads, or above, a radiation level that involves only a very small portion of the calorimeter in the very forward direction. It would take years to accumulate that amount of radiation in any parts of the detector except the most forward.

Holroyd estimates that the effect of radiation damage from neutrons to be equal to or less than gamma rays. This needs to be verified empirically and we will do so by exposing TMP to large doses of neutron radiation. If verified, warm liquids can perform very well even at the most intense radiation levels expected at the SSC.

2.3. Materials Compatibility

This is one of the most important issues, since it has a profound impact on the design and costs of large warm-liquid calorimeters. We know from the UA-1 experience[2,4] that stainless steel (properly cleaned) and ceramic can be in long-term contact with TMP without affecting the purity. Unlike UA-1 however, with its small sealed TMP containers isolated from the absorbers, we are proposing a much larger calorimeter, with a swimming-pool concept -- that is, with the absorber inside the liquid volume. This choice is dictated by the desire for significant reduction in the number of high voltage and signal feed-throughs, ease of construction, lower costs, and better hermeticity. Thus, much more needs to be known about the compatibility of various materials (and their surface treatment) in contact with warm liquids, that is, if the needed liquid purity can be maintained. The most important additional materials for which to verify compatibility are lead, aluminum, and some flexible electrical insulation material.

Beyond the UA-1 results, the work of S. Ochsenbein[5] indicates that Vespel, a polyimide from Dupont, is compatible with TMS. In addition, measurements done by the LBL and College de France groups of this

collaboration, suggest that copper is compatible with TMP and TMS. Perhaps most important thus far are the very preliminary first results from Hollebeek indicating that lead plates in contact with TMS have a small effect, if any, on the signal over more than a five-week period. If so, this means that bare lead may be used as the passive absorber in the large swimming-pool type warm-liquid calorimeter. If it turns out that lead is not a compatible material, we would use lead plates clad in aluminum, if possible, or stainless steel, which is known to be compatible. In either case, such a warm-liquid calorimeter would be significantly less expensive than one with uranium, and is expected to be compensating, according to Wigmans.[6,7] Because of the importance of lead and the shortage of time, these results need to be confirmed unequivocally by compatibility test programs being pursued in parallel by several groups in the collaboration.

If the calorimeter module walls and supports are made out of aluminum instead of stainless steel, it improves the energy resolution, since there are fewer radiation lengths of inert material. Insulation materials of various kinds, particularly flexible films and cable dielectrics and coverings require immediate study. The study is complicated by the necessity to understand the surface preparation, cleaning procedures, and manufacturing variations of the different materials.

2.3.1. A "Swimming Pool" Calorimeter Prototype

A small prototype calorimeter is currently being built as part of the generic R&D program which consists of a sealed vessel containing both the radiator plates and the readout pads. This geometry has been appropriately named the "swimming pool" design. The general mechanical starting point is similar to the SLAC SLD liquid argon calorimeters. The points we wish to address are the following:

1. Simple and reliable modular construction techniques,
2. Electrical connections with minimal geometric impact,
3. Isolation of radiator plates and liquid to maintain purity,
4. Materials that can be immersed without compromising the liquid purity.

The design and construction of the "swimming pool" electromagnetic calorimeter prototype is being carried out at the Harvard High Energy Physics Laboratory. This is one of the first attempts to build a full-scale prototype of such a design .

An electromagnetic calorimeter, because of its compactness and ease of testing, is the most appropriate starting place. The design features a sealed box containing 25 layers of radiator plates and ionization gaps. A cutaway view of this device is shown in figure 1. It is subdivided into 16 towers each with two depth segmentations. The radiator thickness is one radiation length and the

liquid gap size is 1.5 mm. The overall dimensions for this prototype are 20 cm by 20 cm transversely and 16 cm in depth. It is constructed using stainless steel and ceramics for the support and containment structure.

The prototype box holds approximately three liters of liquid, which initially will be TMP. If tests with TMP are successful we plan to try TMS in a future test. The radiator material is isolated from the liquid by either plating them or encasing them in a stainless steel shell. Our intention is to eventually use depleted uranium as the radiator, but for the first version we may use lead or tungsten.

The calorimeter stacks will be assembled under the cleanest conditions possible. We will bake out the completed assembly both before and after its insertion in the liquid confining box. After this it will be flushed first with ultra pure water and then finally with the purified TMP. Once we have observed signals from cosmic rays and sources and have measured a satisfactory lifetime for the liquid, we plan to transport the box to the Fermilab test beam. Here we will expose it to electrons in the energy range of 10-200 GeV and will measure its energy resolution and linearity. The signal characteristics, in particular the speed and integration time, will also be studied.

2.4. Fast Signal Response and Signal-to-Noise.

A critical issue for any liquid-ionization calorimeter used at the SSC, whether liquid argon or warm liquid, is to develop a fast signal response with good signal-to-noise. It is one of the most important parameters of a calorimeter, and one of the most difficult challenges for the warm-liquid R&D. A large fraction of the Generic R&D effort has been devoted to improving the response time of the warm-liquid designs. We have had considerable success in two methods of reducing the response time and increasing the signal-to-noise, using higher gap voltages, and reducing the effective capacitance by the use of the "electrostatic transformer."

2.4.1. Ionization current and high voltage

Although most liquid ionization calorimeters have been used with slow readout, the signal current has an intrinsically fast risetime, reflecting the collective drift of charge in each gap. The signal amplitude is proportional to the density of ionization, the free electron yield, and the drift velocity of the free electrons. In liquid argon the drift velocity saturates at about 5 kV/cm; in TMP and TMS, for which the drift velocity is nearly proportional to the field, the peak current is equal to that in liquid argon at 50 kV/cm and 20 kV/cm, respectively. Since the signal-to-noise ration for the fast signals required at the SSC depends on the peak current rather than the total charge, it will be

advantageous to operate the warm-liquid calorimeters at higher fields than liquid argon. An important development has been the operation, at LBL, of a highly segmented prototype TMP calorimeter, (16 towers of 64 one millimeter gaps), at 60 kV/cm. This work anticipates the operation of the test beam swimming-pool module, and the detector-calorimeter at high fields than has been the practice with liquid argon, approaching 25 to 30 kV/cm.

2.4.2. The Electrostatic Transformer

The charge transfer time depends on the tower impedance, as well as the length and impedance of the connecting cable. To minimize this, it is essential to reduce considerably the tower gap capacitance, C_d. We are developing and testing a novel approach of ganging tower electrodes in a combination of series and parallel connections to reduce the overall tower capacitance substantially. The arrangement would then act as an electrostatic transformer (EST),[8,9] so-called because it behaves from the preamplifier point of view very much the same as a ferrite core transformer. Unlike the ferrite transformer, the operation of the EST is unaffected in the presence of a strong magnetic field. Thus, liquid ionization calorimeters with EST matching of tower and preamp capacitances are especially advantageous in a strong magnetic field.

In most of the present liquid ionization chambers C_d is about five nanofarads with preamplifiers of 50 Ω input resistance, resulting in a charge transfer time of about 500 ns[10] — long compared to SSC beam crossing times of 16 ns. By using the EST concept we can reduce the tower capacitance to about 300 pF. The resulting charge transfer time is 30 ns, and the signal-to-noise is improved because of better capacitance matching and less pile-up.

In the warm-liquid design it appears that the cables from the towers to the preamplifiers can be kept sufficiently short that the preamplifiers could be placed outside the liquid. Because of material compatibility, accessibility, and reliability, this is preferable to almost any design in which the preamplifiers are in the liquid. However, silicon chips in ceramic packages could probably be mounted in the liquid to decrease the capacitance of the tower-cable combination and speed up the charge-transfer time. Since the warm-liquid has large heat capacity per unit volume, the power dissipation of the electronics is much less of a problem than in liquid argon.

The results of our initial study of the electrostatic transformer are very promising, and are described in an article to be submitted for publication.[11] We tested a nine-tower array, with each tower having 10 two millimeter gaps and a 15 cm x 15 cm cross-section. We varied the transformer ratio from n=5 to n=2 by varying the number of gaps in series, and measured the time evolution of the signal and the tower-to-tower cross-talk, as a function of the spacing between towers. For even the most extreme case, n=5 and 1/8" spacing between towers, the cross-talk was acceptable. Thus, we are greatly

encouraged. However, much more effort and study need to be made in order to apply the concept to the large swimming-pool prototype. As in the material studies, parallel efforts by several groups of the collaboration need to be pursued, to shorten the time required to obtain definitive answers.

Finally, to test the fast read-out issues it will be necessary to develop faster electronics than we are presently using, tailored for the swimming-pool prototype beam test. This work has considerable overlap with other calorimeter R&D, particularly with the liquid argon groups[12,13] and with large subsystem proposals on electronics[14], and we expect to avoid unnecessary duplication of effort by collaborating in the electronic development wherever possible.

2.4.3. Other Possible Liquids

Thus far, most studies have been done using TMP or TMS, with most of the emphasis on the former since it is easier to work with because of its significantly higher boiling point, 122° C, compared to 27° C for TMS. TMS provides a better signal-to-noise than TMP. Ideally, one would like to find a more suitable warm liquid having a higher boiling point than TMS but with a higher drift velocity than TMP, and a comparable high free ion yield, G_{fi}. A very recent study by Geer, et. al.[15] shows that tetramethyl germanium (TMGe) and tetramethyl tin (TMSn) are two new promising candidates. Their boiling points are 43° C and 78° C, respectively, and their signal-to-noise merit figure are each three times better than that of TMP and 15% better than TMS, even at the relatively low electric field of 10 kV/cm. Cost estimates as reported at Alabama by Pripstein,[16] for large quantities from the Wiley Organics Co.[17] show that the cost of TMGe would be about ten times greater than for TMSn, whose cost is similar to that of TMS and TMP. Thus TMSn looks more promising than TMP from a performance point of view, has a higher flash point than TMS, and is much less expensive than TMGe. It is, however, more toxic than TMP, and that has to be taken into consideration. These results on possible new liquids are preliminary. More research on these liquids is necessary to confirm the results in a time frame relevant for possible use in our calorimeter.

2.5. Electron/Hadron (e/h) Signal Compensation

Optimum energy resolution and signal linearity as a function of energy is achieved for a hadron calorimeter with an electron/hadron response of unity (e/h=1). In his comprehensive analysis of hadron calorimetry, Wigmans[18] has concluded that to achieve this, the properties of the readout material are important, in particular the free-proton content and the saturation or recombination properties of the ionization signal for few-MeV proton

detection. Since warm liquids are hydrogenous, as long as the saturation is relatively low, Wigmans[19] has calculated that one can achieve compensation with a reasonable combination of Pb absorbers and TMP (or any other warm liquid). We are testing his model as part of the generic detector R&D program, the results of which will determine the configuration of Pb and warm-liquid in our proposed swimming-pool prototype.

2.5.1 Signal Saturation

Figure 2 shows Wigmans'[20] predictions of e/h as a function of the ionization signal saturation in TMP, characterized by Birk's constant, k_b. It is clear that e/h is a very sensitive function of the saturation. Recent measurements by some members of our WALIC collaboration[21] show that the saturation is large for 25 MeV protons but depends strongly on the angle between the ionizing track and the electric field and somewhat on the strength of the electric field (Figs. 3a and 3b). Other measurements by Ochsenbein[22] (Fig. 4) suggest that the saturation decreases for very heavily ionizing particles compared with moderately ionizing particles; that is, k_b is smaller for 1 MeV protons than for 20 MeV protons. The two sets of results taken together indicate that the average saturation for hadron showers in TMP or TMS would correspond to a k_b value of about 0.02 gm/MeV-cm^2. This is supported by the very recent results of Duhm et. al.,[23] who obtained a value of $k_b = 0.0191$ gm/MeV-cm^2 in TMS, from measurements with protons in the 8 - 23 MeV region and integrating over all angles. For $k_b \approx 0.02$ gm/MeV-cm^2 Wigmans' calculations (Fig. 2) indicate that one can have a Pb-warm liquid compensating calorimeter with a Pb-warm liquid thickness ratio of 4/1, which is perfectly acceptable.

2.5.2. Beam Test in the Generic Detector R&D Program

The most direct measurement of compensation is made with a calorimeter exposed to beams of electrons and hadrons. As part of our active generic R&D program, we are now preparing a comprehensive test of hadron calorimetry for the SSC, in a major test beam run at Fermilab in 1990 (experiment T-795). The TMP calorimeter is highly modularized, to allow for systematic measurement of compensation (e/h) as a function of parameters which affect shower production, such as the ratio of passive-to-active absorber, and type of absorbers (Fig. 5). The results should provide significant constraints on any Monte Carlo shower model predictions and would therefore be relevant for any type of hadron calorimeter. Of more immediate relevance, the results would determine the choice of Pb and warm-liquid gap thicknesses for the compensating swimming-pool calorimeter being proposed here.

2.6. Engineering Studies of a Large Hermetic Calorimeter

In order to understand some of the larger systems issues of warm liquid calorimetry, and how such a calorimeter might interface with a realistic SSC detector, a program was begun in the past year to undertake some preliminary engineering designs and analyses of the warm-liquid concept in the context of the large solenoidal detector.

2.6.1. The Collaboration with EG&G

A working collaboration was formed with EG&G to design and analyze a warm-liquid calorimeter integrated into a realistic detector. The work concentrates on the calorimeter, concerning itself with the other aspects of the detector only where they impact the calorimeter. The working relationship is one in which a few people at EG&G perform design studies under the guidance of an engineer from LBL, who in turn takes his guidance from regular meetings with a number of people from the collaboration, often

EG&G began their preliminary engineering design study with a set of baseline parameters. These parameters evolved from those established by the participants in the Warm-liquid Working Group at the SSC Calorimeter Workshop held in Alabama in April, 1989. The important parameters given to EG&G were:

1. Geometry — The large solenoid detector calorimeter dimensions of the 1987 Berkeley Detector Workshop;[24]
2. Modularity — A 20 ton upper limit on individual module weight and the requirement for many separate liquid volumes;
3. Assembly and maintenance requirements;
4. Other relevant parameters, such as the properties of TMP, a list of materials known to be compatible with TMP/TMS, an active volume density of 9.2 g/cm^3 (representing Pb absorber : liquid gap : Pb tile in a 8:2:8 mm ratio), and material allowables from ASME pressure vessel code, section III, were given as well.

The statement of work included:

1. Create a 3-D CAD model of the WLC support structure and modules, including space for plumbing, signal cabling, and structural support;
2. Design and analyze, using the finite element method where appropriate, the overall calorimeter structure and the individual module structures;
3. During the design process interactively assess the hermeticity, with the qualitative aid of the collaborators, and modify the design as necessary;

4. Quantitatively assess the calorimeter resolution and depth using the code developed by Strovink, Womersley, and Forden;[25]
5. Participate in a preliminary review and evaluation of the WLC and prepare a status report of the design effort.

2.6.2. A description of the preliminary design

A plot of the 3-D solid model of the warm-liquid calorimeter is shown in Figure 6 . The plot shows the three separate bays of the central calorimeter (CC), each bay consisting of 64 modules, 32 combined EM/inner hadronic modules, and behind them 32 outer hadronic modules. Each endcap (EC) consists of a monolithic electromagnetic calorimeter and 44 hadronic modules, four to 12 in azimuth, depending on which of three depth layers is considered. In the central calorimeter, washers separate the bays and transfer the module weight to the calorimeter barrel; these washers extend radially inward only to the outer radius of the inner hadronic modules to minimize dead material where it would have the greatest effect on resolution. In this manner particles pass through about five interaction lengths of live material prior to entering the structural material of the washers, and so the shower is well past its peak energy deposition before it encounters any significant inactive material. Passing between these washer pairs are the liquid fill and drain lines, and the signal and hi-voltage cabling. One of the advantageous features of this washer structure is that the 64 modules can be assembled into bays external to the calorimeter support barrel, which maximizes both access and our ability to test an assembled module bay prior to final placement in the barrel. Figure 7 shows some of the details of the module and washer structure and the pertinent dimensions.

Because of the particular ground rules given to EG&G, the only metallic structural material allowed to come in contact with the ionizing liquid is stainless steel; therefore, the thinner module elements, side walls and end walls, are stainless. The thicker structural elements, or module strongbacks, consist of stainless skins, typically 1/16" to 1/8" thick, and structural aluminum to minimize mass. In many instances, this aluminum/stainless composite wall is only marginally thicker than it would be if it were 100% stainless because stress, not stiffness, is the limiting factor.

2.6.3. Hermeticity Study Results

One of the main goals of the design study undertaken in collaboration with EG&G is to estimate the hermeticity of the a warm liquid calorimeter system enclosed in a large solenoid. When the design had reached a point where all the structure had been given at least a preliminary sizing analysis, a program was set up to evaluate the hermeticity warm liquid calorimeter.

Although the results are preliminary, one can see the importance of carefully merging different sections of the detector, minimizing walls and cracks, and choosing the correct structural materials. Of particular interest is the striking differences in hermeticity between steel and aluminum structures. If we take the aluminum-wall model as an attainable design, we conclude that a high level of hermeticity can be obtained with a warm liquid calorimeter detector.

The particle rays were generated for a range of polar angles (pseudorapidities) at several fixed azimuthal angles. The pseudorapidity range is shown superimposed on the detector in Figure 8. The azimuthal angles were chosen to illustrate both the best and the worst possible cases. In the best case, the ray passes through the module without encountering any walls; in the worst case, the ray passes through the walls between modules at the peak of its energy deposition. An azimuthal slice of the 3-D CAD model is taken and the geometry formatted as input data for the hermeticity code.[26] At any azimuthal slice, particles or rays are stepped in polar angle in two degree increments through the calorimeter from pseudorapidity of zero through three, with 0.2 degree incremental rays used in the two washer areas of the central calorimeter and central calorimeter/end-cap boundary, for greater sensitivity. Rays were traced from the interaction point through the detector along these azimuthal slices, and the amount and type of material along the ray was recorded. Using this information it was then possible to estimate the calorimetric energy resolution for both electrons and pions.

In the following discussion two particular cases are considered: zero degrees, where the ray enters the center of the face of a given calorimeter wedge, and 4.1 degrees, where the ray enters the calorimeter at the interface between two modules. The design considered has the module boundaries angled so they do not project back to the beam axis (pinwheeled). This is illustrated in figure 9. In addition, two different assumptions about the composition of the calorimeter are considered: a design with stainless steel module walls and composite stainless-aluminum strongbacks and another design totally of aluminum.

In figures 10a through 10d the number of interaction lengths of material seen by each ray in each case described above is shown as a function of pseudorapidity. In each of the sub-figures the top curve shows the total number of interaction lengths, while the bottom curve (with crosses) shows the amount of this material which is active calorimeter. The sawtooth pattern of the curves corresponds to the transitions between the different segments of the detector. These occur at the outer edge of the detector and therefore do not greatly effect the performance of the device. The number of active interaction lengths averages in excess of ten and never falls below eight, which should be more than sufficient for hadron shower containment.

Figures 11a-11d and 12a-12d show the expected energy resolution for 10 GeV and 100 GeV incident particles respectively. Both of these figures are divided into four parts by azimuthal angle and calorimeter composition as in figure 10. They each contain two curves corresponding to incident electrons

and pions. In general the resolution curves improve gradually as the pseudorapidity increases and the amount of active material increases. In a more realistic calculation, however, this effect will be offset by the increase in the sampling thickness at larger pseudorapidities, due to the decrease in the incident angle. Therefore, we concentrate on the structures that are superimposed on top of the gradual improvement of resolution. For all cases the electron resolution shows peaks at pseudorapidities of 0.85 and 1.6. As can be seen from Figure 8, these are the locations where the electromagnetic layer of the calorimeter is broken by a wall. Not surprisingly, these peaks are much worse in the cases where this wall is stainless steel than when it is aluminum. In the aluminum wall case they are negligible. This leads us to the obvious conclusion that minimizing the thickness of the walls (in radiation lengths) between segments in the electromagnetic layer should be a high priority.

In the pion cases there is a broad peak in the resolution between pseudorapidities of 1.4 and 1.6. In this region the pions are no longer captured by the barrel module and have not yet entered the central endcap module. Thus, they are primarily measured in the outer endcap modules, and must pass through as many as three walls. This effect is enhanced at 4.1 degrees azimuth and extends down to a pseudorapidity of 0.8 in the stainless steel wall case at 4.1 degrees azimuth. In this case the pion is in the vicinity of a module wall for much of its path length. This transition region is a difficult one to improve, as the thickness of the module walls and support cylinders has already been minimized.

In conclusion, hermeticity studies have been done for the present design, and the 3-D CAD analysis code has been linked to the hermeticity code so that the effect of variations in the design can be followed. Initial studies indicate that the present mechanical design yields very good hermeticity performance compared to liquid argon designs.

3. The Large Subsystem R&D Program for Fiscal Year 1990

The Large Subsystem R&D program for the coming year concentrates on demonstrating that warm liquid calorimetry is an excellent choice for the calorimeter system of a large, 4π, SSC detector. In the summary of the Generic R&D program we have shown that the fundamental properties of warm liquids are very promising in this regard. To show that this technology is the right one for an SSC detector requires an extrapolation to large systems. We propose to demonstrate the systems effectiveness of warm-liquid calorimetry by carrying out two separate activities:

1. A beam test of a "swimming-pool" type module
2. An engineering design of a full-size warm-liquid calorimeter integrated into an SSC detector.

The emphasis in fiscal year 1990 is on the design and fabrication of the test beam module (TBM), with the integrated calorimeter design proceeding at a lower priority. All of the tasks in this proposal are related to the two goals stated above. In parallel, there are additional R&D tasks, necessary to the success of this proposal that are being carried forward under the aegis of the Warm Liquid Generic R&D proposal.

By adopting an aggressive approach to the work before us we intend to design, fabricate, assemble, and ship the TBM in 14 months from the start of the program, so almost all of the costs associated with the construction of the TBM appear in the first year. The beam test will take place in the second year of the program. This approach engenders some risks, but is preferred to a more conservative approach for three reasons:

1. Warm-liquid calorimetry is an unproven technology as far as large systems are concerned. In order to be considered as a viable possibility for the SSC the "proof-of-principle" that we propose must be accomplished soon.
2. A significant beam test requires a significant beam. The schedule of test beams in the U. S. is such that the TBM must be constructed quickly.
3. In a situation where money is tight, a fast schedule reduces costs.

Accomplishing the construction of the TBM in 14 months from the start of the program requires that design decisions must be made very early and not changed unless absolutely necessary. It is possible that some of these decisions will have to be made before the relevant R&D is completed, and, hence there is a risk that R&D results subsequent to the start of design will require changes that will delay the TBM test. Nevertheless, it is our considered opinion that the risks are worth taking, and that judicious

planning can minimize the effects of changes in the expected results. For example, although we will have only one large design effort for the TBM, there will be other, smaller efforts that can be considered reasonable "fall-back" positions. The most obvious one is to make and test small prototypes involving different types of radiator plates and cladding, and different designs of the fast-readout system. Small efforts in these areas could give us considerable insurance against major delays due to late changes.

3.1. Test Beam Module Development, Design, and Construction

The TBM will be a complete calorimeter module with both electromagnetic and hadronic sections. In order to completely contain the showers, it will be between 10 and 12 proton interaction lengths long, and at least 40 cm x 40 cm in cross-section. It will probably be built in three (perhaps two) separate modules, the front one being an electromagnetic section of 20 to 25 radiation lengths followed by two identical hadronic modules of five interaction lengths each. It might be convenient to include the electromagnetic module with the front hadronic module. The stack will be arranged in straight towers in order to investigate the effect of tower boundaries. The number of towers will be approximately 64 in the electromagnetic section and 16 in the hadronic sections; the final number will be such as to match the transverse tower size with the transverse shower spread.

As described above, the TBM is a simple and straightforward device, allowing the greatest probability of success. At this time, we intend to use the electrostatic transformer concept in its design, which complicates the internal structure somewhat. It is important to have realistic internal structure, since that will influence the performance of the TBM, so considerable design effort will go into the stack and towers, and the internal support and wiring. The external wiring is not so critical, however, and we do not expect at this time to perform exhaustive R&D on feed-throughs, plumbing, recirculating techniques, and so-forth, but to utilize already tested devices and techniques. It is our belief that these components will eventually have to be designed as an integral part of a total detector, but postponing this design work will not effect the results of the TBM test.

Whether the stack is made of plates and tiles or insulated plates covered by printed circuits is not yet decided. The second method appears to be easier to fabricate and assemble, and would have better mechanical integrity, but is more risky in terms of compatibility because more insulation is required. At the present time we are assuming that the type of lead we would use in a large calorimeter is compatible with warm liquids. The compatibility of these materials is being verified in a parallel research effort, both in the Generic program and in this proposed program. The design work (and some

prototyping, also) must proceed in parallel in order to avoid unacceptable delays if the materials must be changed.

One of the aspects of the TBM that must be attacked with vigor is a new design of the preamplifier and shaper circuits for the tower signals, because one of the most critical parameters of any liquid ionization calorimeter is its time response. In developing the preamplifiers and shapers, we will rely largely on the work being done by the liquid argon[27] and front-end electronic[28] large subsystem groups, to the extent that their developments are timely. It is not critical to have an inexpensive and fully developed integrated circuit for the TBM test, as it will be for the complete detector, so a preamplifier and shaper made of standard components can be used.

Although it is in the low energy part of a shower that the compensation of response is most important, the test of the module should be carried out with high-energy beams, where the resolution of the calorimeter is sufficiently good to be sensitive to the effect. It would be most convenient to use the Fermilab test beam MT, because this collaboration is using that same beam to perform a test on warm-liquid modules in early 1990, and hence will be familiar with it. It is possible that our schedule will not overlap with the Fermilab test-beam availability, however, and so we are planning to be able to test the TBM at CERN, if possible, or at BNL. A BNL 30 GeV test beam is may be high enough in energy to test the compensation and linearity of the module, but it is marginal. The availability of beams at Fermilab, CERN, or BNL is not yet known. In any case, the energy of the beam should be tuneable over a significant range, 10 GeV to a few hundred GeV at Fermilab or CERN, and should have a good tagging system for electrons.

We expect to use familiar software from the Fermilab E-795 test to run the experiment and do the analysis. The data collection and computer equipment will be supplied by the Laboratory. If the test is done at CERN or BNL, modifications will have to be made to accommodate different equipment. In addition, modifications to the existing software to account for the new module design will have to be written. For example, the calorimeter of E-795 is not segmented into transverse towers, but the planned swimming pool TBM is, requiring a different analysis. It is thought that this software effort is moderate.

3.2. Development of a Full-scale Integrated SSC Detector Calorimeter

In order to understand the performance of the calorimeter, it is necessary to design it as an integral part of a complete detector. We expect that the warm-liquid concept will be part of a large, 4π detector proposal to the SSC in the future. In the meantime, it is important to continue design studies of the calorimeter as it would be in various types of detectors.

The results of the work done so far with EG&G is described in summary in Section 2 of this proposal and in detail in Appendix A. It was based on the large solenoid design developed at the 1987 Detector Workshop at Berkeley.[29] We intend to continue that work and expand its scope in the coming year, and to that effect a preliminary program has been developed by the collaboration and EG&G, so that there is no pause in the work while waiting for action on this proposal. That program has not yet been finalized, nor has it been submitted to the SSC for approval. It is included in Appendix A as a draft statement of work (August 29, 1989).

To summarize, we propose that further efforts in the immediate future with EG&G concentrate on the impact of the large solenoid detector assembly schedule on the calorimeter design, and then to reassess any alternate support structure concepts stemming from this work. Additionally, it is proposed that EG&G re-evaluate the module structure and support as the design progresses on the volume interior to the module. Details of both the central and end-cap designs, including such items as electrical feed-throughs, plumbing connections, and manufacturing and assembly tolerances, will be developed in greater detail.

In the longer term, we are particularly interested in investigating how a warm-liquid calorimeter fits into a detector with a thin solenoid interior to the calorimeter. There are several concepts of detectors based on interior thin-coil magnets being discussed. It is likely that EG&G or some other firm will assist in the conceptual and engineering designs and evaluation of warm-liquid calorimetry in such a detector. As design options are eliminated for various reasons, the engineering work will probe into more and more detail in the surviving designs. Although it is thought that the design work done in fiscal year 1990 can be sufficiently independent of the details of a detector so that a number of detector options can be carried, this will not be the case forever. At some point, probably in 1991, the warm-liquid design work must be integrated into a particular detector configuration.

The mechanical design and engineering of the integrated calorimeter can be divided into the major categories of overall support structure, module enclosure and support, module interior, and assembly procedures. For each of these there are, of course, the tasks of integrating with the other systems of the detector, such as the tracking and magnet systems, and the integration of the calorimeter subsystems — electrical, plumbing, safety, and so forth.

One of the most important and challenging considerations relevant to the overall support structure is the assembly procedure, and it serves as a good example of a motivation for studying the full-size integrated calorimeter. In the large solenoid case, for example, the magnet design dictates that the calorimeter be assembled into the detector from the ends — slid into the breach. The uncertainty about whether the magnet or the calorimeter would be completed first further complicates the procedure. In trying to solve this problem, EG&G and the collaboration invented a scheme in which the modules were assembled into washer outside of the magnet, and then slid in

as a large assembly. This allowed the testing of fully assembled bays of calorimeter with electrical and plumbing in place, resulting in confidence that the device was working before assembly. The hermiticity studies showed that the washers should not protrude radially inward beyond the outside of the inner hadronic module, and the mechanical design had to take that into account. For the small interior coils, it appears that the calorimeter can be installed as clamshells around the magnet, as it is in the CDF experiment. This allows excellent access to the calorimeter and other systems, and also allows an arbitrary order of assembly. The calorimeter module bays with their attached muon steel is very heavy, however, and it will be an engineering challenge to to move them to obtain easy access to the calorimeter.

Similar considerations exist for the modules and the module interior assembly, and a large amount of interesting and difficult engineering work will have to be done to understand the details of the detector. As this information is generated, it must be fed into a number of physics assessment efforts, where the effect of designs on the physics capability of the detector will be evaluated.

Finally, EG&G will aid in the preparation of cost and schedule estimates for a Warm Liquid Calorimeter as part of an integrated 4π detector.

3.3 Manpower and Effort for the U.S. Part of the Collaboration

The precise commitments of the French and Japanese groups are still under negotiation. The peer review process of their funding agencies is on a different schedule.

3.3.1 Manpower Commitments

Institution	Scientist	Total FTEs (by institution)
Brandeis	J. Bensinger	0.5
Berkeley/LBL	W. Edwards R. Jared P. Limon M. Pripstein M. Strovink T. Weber W. Wenzel R. Wolgast	5.0
Florida State U.	J. Womersley	0.3
Fermilab	D. Theriot	0.1
Harvard	G. Brandenburg S. Geer J. Oliver E. Sadowski	2.0
U. of Pennsylvania	B. Hollebeek M. Newcomer R. VanBerg	1.0

3.3.2 Initial Division of U.S. Effort (tentative)

	Item	Prime Responsibility (by institution)
I.A.	Engineering design and construction of the large swimming-pool prototype calorimeter	LBL
I.B.	Design and test prototypes of stacks for swimming-pool module	Harvard, Brandeis, LBL
I.C.	Materials compatibility studies	LBL, U. of Pennsylvania
I.D.	Fast readout for TBM	Brandeis, Harvard U. of Pennsylvania
II.A.	Comprehensive engineering design of a full-size, hermetic detector calorimeter	Brandeis, Harvard, Fermilab, LBL
II.B.	Analytic hermeticity studies	Florida State U.
III.	R&D on other promising liquids	U. of Pennsylvania

3.4. R&D Cost Estimate Funding Requested from SSC for Fiscal Year 1990
(Support for U.S. groups only, including outside contractors.)

Item	Cost (U.S.K$) (Not including overhead)	Total Cost (U.S.K$)
I. Large Swimming-pool Calorimeter Module		
A. Engineering design and construction		
1. Mechanical engineers & designers (2.25 FTE)	200	
2. Electrical and electronics engineering (1.5 FTE)	150	
3. Contract mechanical engineering	250	
4. Construction and fabrication (raw materials, assembly, large-scale cleaning)	250	
Total Cost for Item I.A.		850
B. Design and Tests of Stacks for TBM. (Tower stacking and support, HV distribution, fast-readout studies)		
1. Engineering (1 FTE)	100	
2. Technical support (1 FTE)	70	
3. Raw materials and assembly	100	
Total Cost for Item I.B.		270
C. Material compatibility studies specific to the TBM		
1. Construction, assembly, and maintenance of test cells	70	
2. Test program (1.5 FTE tech.)	105	
Total Cost for Item I.C.		175
D. Readout for TBM		
1. Fast electronics (design & fabrication or purchase of fast analog and digital electronics)	100	
2. Other electronics and test equipment	50	
Total Cost for Item I.D.		150
E. Purchase of 200 liters of TMP/TMS	40	40
Total for design and fabrication of test module		1,485

3.4. Cost Estimate for Fiscal Year 1990 (continued)

Item	Cost (U.S.K$)	Total Cost (U.S.K$)
II. Comprehensive engineering design of a full-size, hermetic, integrated calorimeter		
A. Mechanical and electrical design		
1. Mechanical engineering (.5 FTE)	50	
2. Electrical engineering (.5 FTE)	50	
3. Contract engineering design effort	250	
Total for II.A.		350
B. Simulation software and hermeticity studies	30	30
Total Cost for Design Study of Integrated Calorimeter		380
III. R&D on other liquids (liquid costs, test cells, purifications, etc., beyond scope of generic R&D program)	50	50
IV. Travel	50	50
Total Cost for Item I. through IV. (Not including overhead)		1,965 K

3.5. Comments and Cost Estimate for Fiscal Year 1991

The highest priority work for the first follow-on year will be completion of the assembly of the TBM, shipping and filling, and its beam test. We have estimated the assembly, shipping and filling costs at $ 200 K. The design effort for the TBM will decrease in mid-year, but the test program will require additional physics and technical support.

We expect that the various detector concepts will have become more firm. In this case, the integrated calorimeter design will become more detailed, requiring much deeper engineering analysis and physics simulation. The work presently being done with EG&G will be greatly enlarged, and because of the detail involved, will require not only design engineering, but also a much stronger analysis effort. The physics task to keep up with the details in the designs will have to expand, and detector specific software will have to be written and used. One of the engineering tasks often ignored, but which should start early in the design, is the industrialization of the fabrication. This is best done by early contact with companies that are likely candidates to actually build the modules, so that they can have their input into the design. Mass production will be necessary if we wish to build these devices at reasonable cost in a short time, and experts on those techniques and tooling are required at the earliest possible time.

Our expectation is that if the R&D continues to show successful results, the manpower of physicists and engineers, including commercial firms, will approximately double, in addition to the operation of a major beam test. There will also be some expenses associated with modifications and additions to the TBM. A very preliminary estimate for fiscal year 1991 is $4 million.

3.6 Beam Requirements for the TBM Test

The beam requirements for the TBM test are rather modest, except for the energy range required of a high-energy beam.

Intensity	low	a few to a few thousand per pulse
Highest energy	250 GeV	
Lowest energy	10 GeV	5 GeV would be better

Other Requirements: The beam must have an electron tagging system.

FIGURES

1. A cutaway view of the small (20 cm x 20 cm) prototype "swimming pool" calorimeter.

2. Predicted electromagnetic to hadronic (e/h) signal ratio as a function of Birk's constant, k_B, for TMP calorimeters with uranium (2a) or lead (2b) absorbers of various thicknesses. The liquid gaps are 2.5 mm wide. From Wigmans.[30]

3. Saturation (Birk's constant), k_b, in TMP (3a) and TMS (3b) as a function of angle between the ionization track and the electric field, for various electric fields. From B. Aubert, et. al.[31]

4. The free electron ionization yield normalized to that from a minimum ionizing electron at the same gap voltage, parameterized by Birk's constant, k_b. From S. Ochsenbein.[32]

5. Schematic of the WALIC collaboration modularized calorimeter to be used in E-795 at Fermilab to measure e/h compensation.

6. A 3-D solid model of the calorimeter developed in the EG&G study.

7. Details of the module and washer structure from the EG&G study

8. Profile of the warm liquid calorimeter showing the module structure and rays at various values of pseudorapidity.

9. Cutaway view of two adjacent barrel calorimeter modules in the r-phi plane showing rays at azimuthal angles of zero and 4.1 degrees.

10. The number of interaction lengths of material in the warm liquid calorimeter as function of pseudorapidity. Both the total material (upper curves) and the active material (lower curves) are shown. The locations of rays are shown by the crosses on the lower curve. The four frames show the results at azimuthal angles of 0 and 4.1 degrees for designs with either stainless steel or aluminum module walls.

11. The energy resolution of the warm liquid calorimeter for 10 GeV electrons (lower curves) and pions (upper curves) as a function of pseudorapidity. The four frames show the results at azimuthal angles of zero and 4.1 degrees for designs with either stainless steel or aluminum module walls.

12. The energy resolution of the warm liquid calorimeter for 100 GeV electrons (lower curves) and pions (upper curves) as a function of pseudorapidity. The four frames show the results at azimuthal angles of zero and 4.1 degrees for designs with either stainless steel or aluminum module walls.

13. Warm-liquid calorimeter Test Beam Module construction schedule

1 EG&G Energy Measurements, Inc., 5667 Gibralter Dr., P.O. Box 9051, Pleasanton, CA 94566

2 A. Givernaud, *Performance of a UA-1 Uranium - TMP Calorimeter Module*, Talk, The SSC Workshop on Calorimetry, March 13 - 17, 1989, Tuscaloosa, AL.

3 R. A. Holroyd, Radiation Effects in the SSC, M.G.D. Gilchriese, ed., SSC-SR-1035

4 M. Albrow, et. al., Nuclear Instruments and Methods, A235 (1988), p 303

5 S. Ochsenbein, Private communication

6 R. Wigmans, Nuclear Instruments and Methods, A259 (1987), 389

7 R. Wigmans, NIKHEF - H, 87-88 (1987)

8 J. Colas, *Speed of Response, Pileup, and Signal-to-Noise Ratioin Liquid Ionization Calorimeters,*Talk, presented at The SSC Workshop on Calorimetry, March 13-17, 1989, Tuscaloosa, AL. Also published in LBL Report LBL-27328 (1989)

9 J. Colas and W. A. Wenzel, *Electrostatic Transformers for Large Towers,* submitted to the proceedings of The SSC Workshop on Calorimetry, March 13-17, 1989, Tuscaloosa, AL., and also LBL Report LBL-27326 (1989)

10 J. Colas, see reference 8.

11 J. Colas, M. Pripstein, W.A. Wenzel, *Electrostatic Transformers for Large Capacitance Liquid Ionization Calorimeters,* GIN-311, September, 1989, to be submitted for publication.

12 V. Radeka, Talks at Snowmass (1988), and Dallas, (1989)

13 V. Radeka and S. Rescia, Nuclear Instruments and Methods, A265 (1988), p228

14 H. H. Williams, et. al., A Large Subsystem Proposal for Front-end Electronics, to be submitted to the SSCL, October 2, 1989, Dallas, TX

15 S. Geer, R.A. Holroyd, and F. Ptohos, Submitted to Nuclear Instruments and Methods, also BNL Report BNL-43155, August, 1989

16 M. Pripstein, Summary talk of the Warm-liquid Calorimetry Working Group at the SSC Workshop on Calorimetry, March 13-17, 1989, Tuscaloosa, AL

17 Wiley Organics Co., 1245 S. Sixth St., P.O. Box 670, Coshocton, OH 43812

18 R. Wigmans, see Ref. 6

19 R. Wigmans, Proceedings of the Workshop on Experiment, Detectors, and Experimental Areas for the Supercollider, Berkeley, CA., 1987, p. 608

20 R. Wigmans, see Ref. 19

21 B. Aubert, et. al., Lapp - EXP/89-08, submitted to Nuclear Instruments and Methods.

22 S. Ochsenbein, *Room Temperature Liquid Ionization Chambers,* SIN Report, presented at NATO ASI, Portugal, July, 1987. Proceedings to be published in NIM A.

23 H. H. Duhm, I. Fedder, and K. Schiffmann, Nuclear Instruments and Methods, A277, 1989, p. 565

24 G. G. Hanson, et. al., Proceedings of the Workshop on Experiment, Detectors, and Experimental Areas for the Supercollider, Berkeley, CA., 1987, p 340

25 M. Strovink, W. J. Womersley, and G. E. Forden, *Hermeticity in Three Cryogenic Calorimeter Geometries,* Invited talks at The Workshop on Calorimetry for the Supercollider, Tuscaloosa, AL, March 13-17, 1989

26 W. J. Womersley set up this software at EG&G, see Ref. 25

27 G. S. Abrams, et. al., Proposal for Research and Development of a Liquid Argon Large Calorimeter for the SSC, to be submitted to the SSCL, October, 1989.

28 H. H. Williams, et. al., A Large Subsystem Proposal for Front-end Electronics, to be submitted to the SSCL, October 2, 1989, Dallas, TX

29 G. G. Hanson, et. al., see Ref. 24

30 Wigmans, see Ref. 6

31 B. Aubert, et. al. See Ref. 21

32 S. Ochsenbein, Private communication

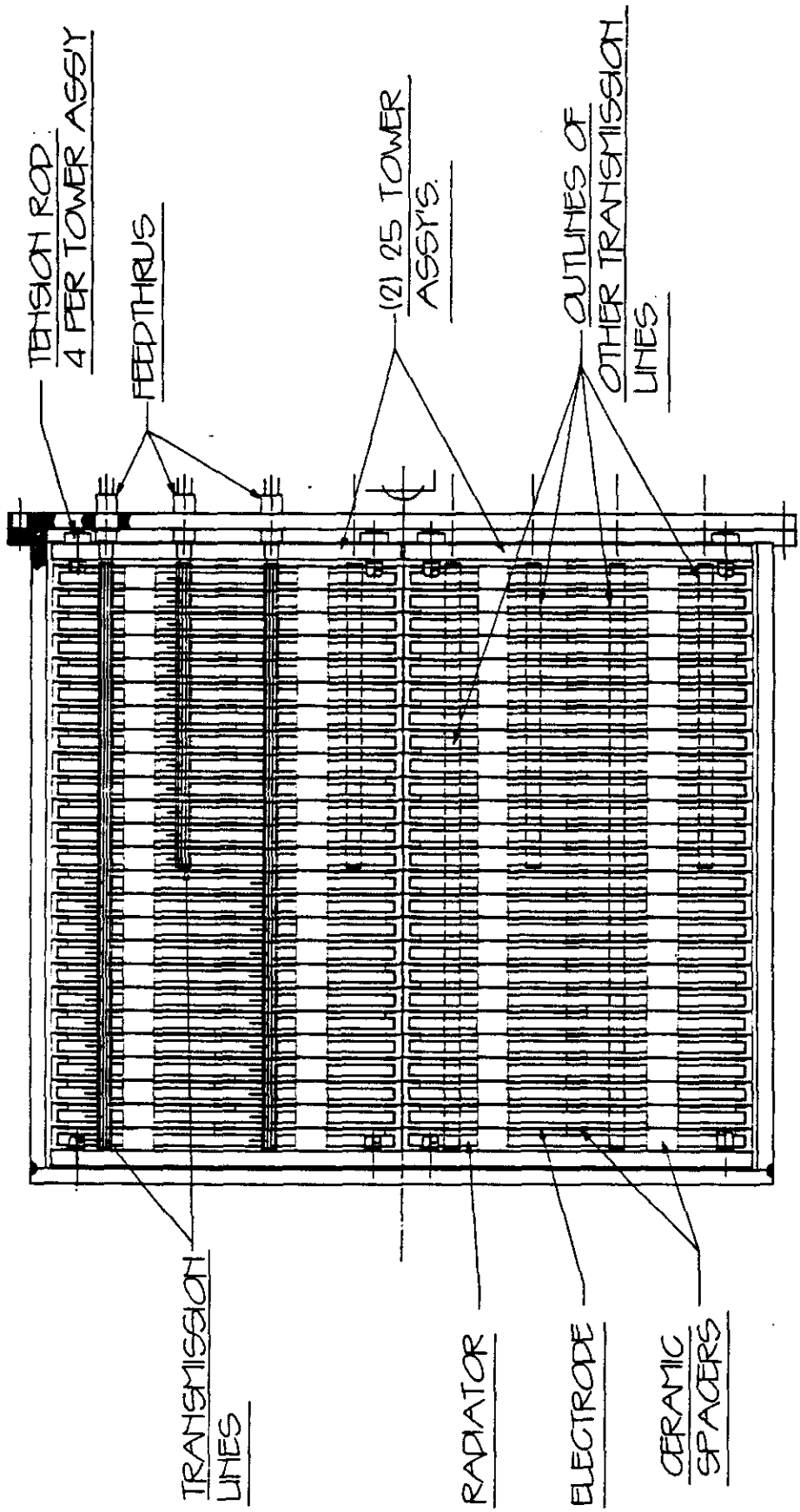
TENSION ROD
4 PER TOWER ASS'Y
FEEDTHRUS
(2) 25 TOWER
ASS'YS.
OUTLINES OF
OTHER TRANSMISSION
LINES
TRANSMISSION
LINES
RADIATOR
ELECTRODE
CERAMIC
SPACERS

Figure 1

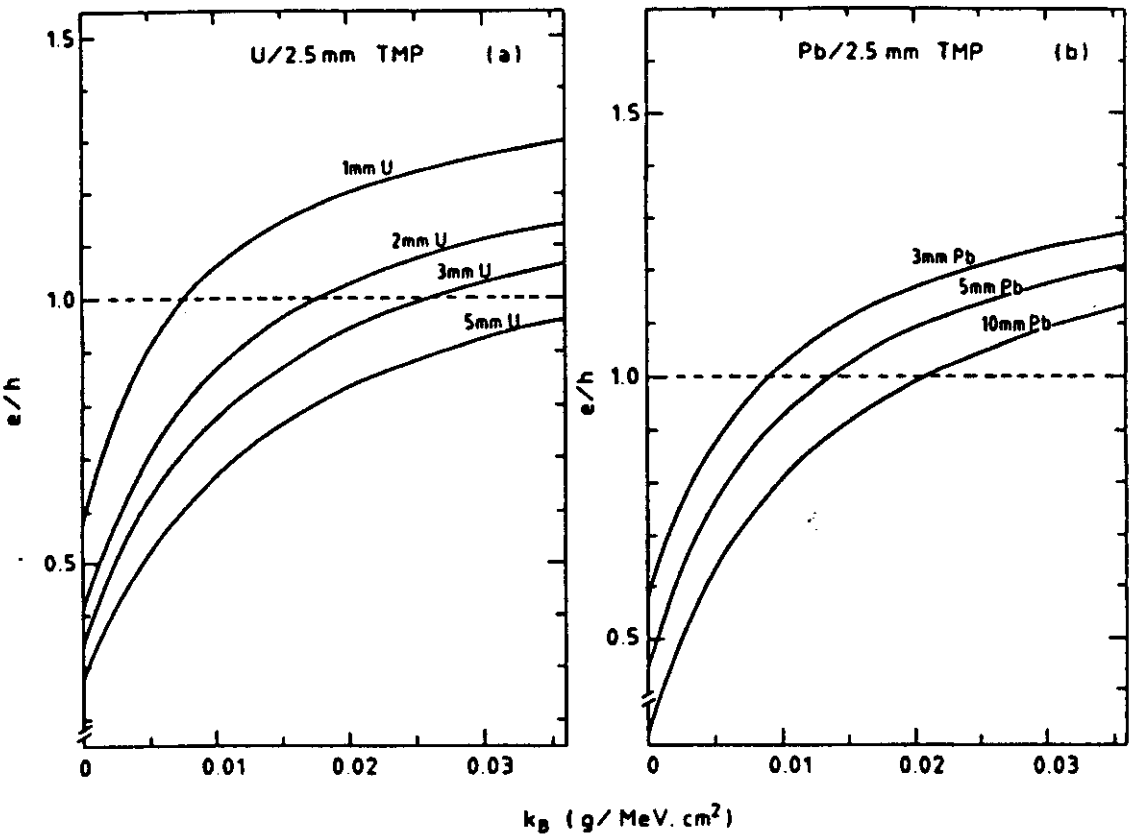
U/2.5 mm TMP (a)
1mm U
2mm U
3mm U
5mm U
e/h
1.5
1.0
0.5
0
0.01
0.02
0.03
Pb/2.5 mm TMP (b)
3mm Pb
5mm Pb
10mm Pb
e/h
1.5
1.0
0.5
0
0.01
0.02
0.03
k_B (g/MeV.cm^2)

Fig. 2a

Fig. 2b

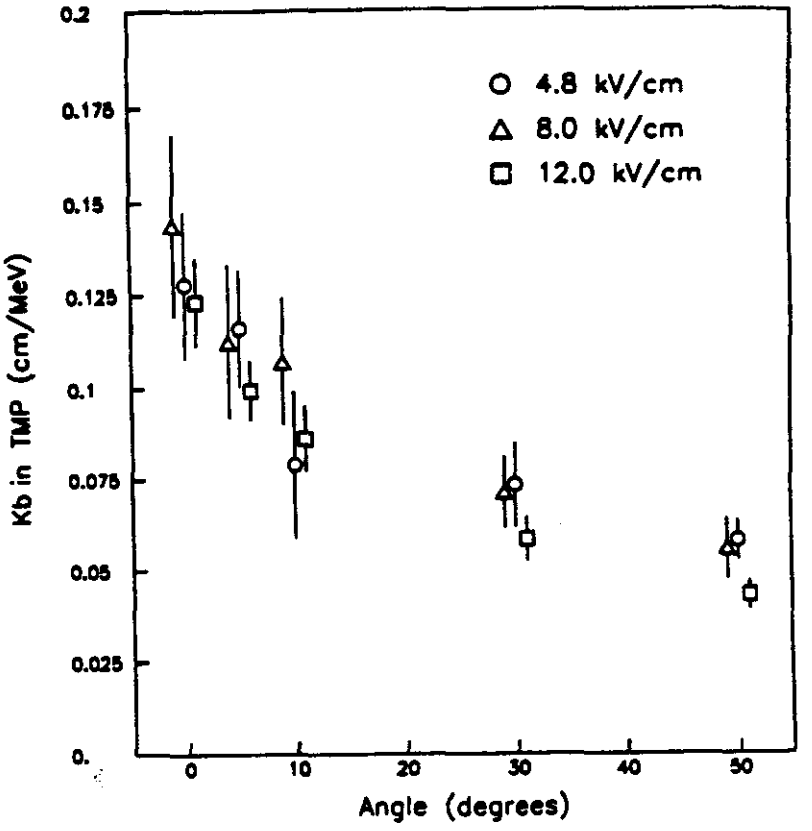
0.2
0.175
0.15
0.125
0.1
0.075
0.05
0.025
0.
Kb in TMP (cm/MeV)
4.8 kV/cm
8.0 kV/cm
12.0 kV/cm
0
10
20
30
40
50
Angle (degrees)

Fig. 3a

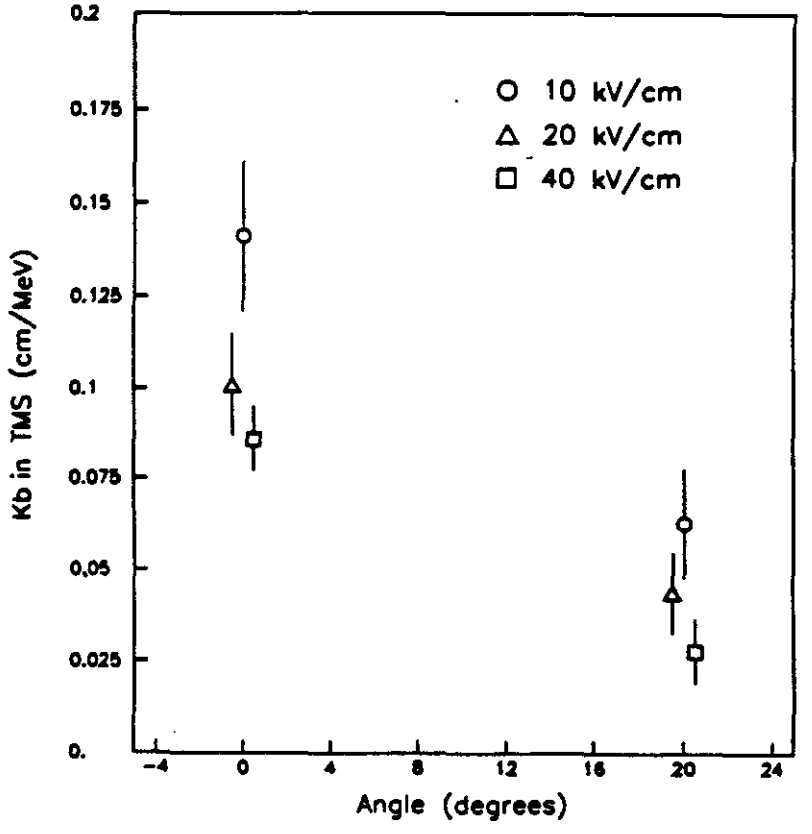
0.2
0.175
0.15
0.125
0.1
0.075
0.05
0.025
0.
Kb in TMS (cm/MeV)
10 kV/cm
20 kV/cm
40 kV/cm
-4
0
4
8
12
16
20
24
Angle (degrees)

Fig. 3b

Saturation effects in TMS

(Ochsenbein)

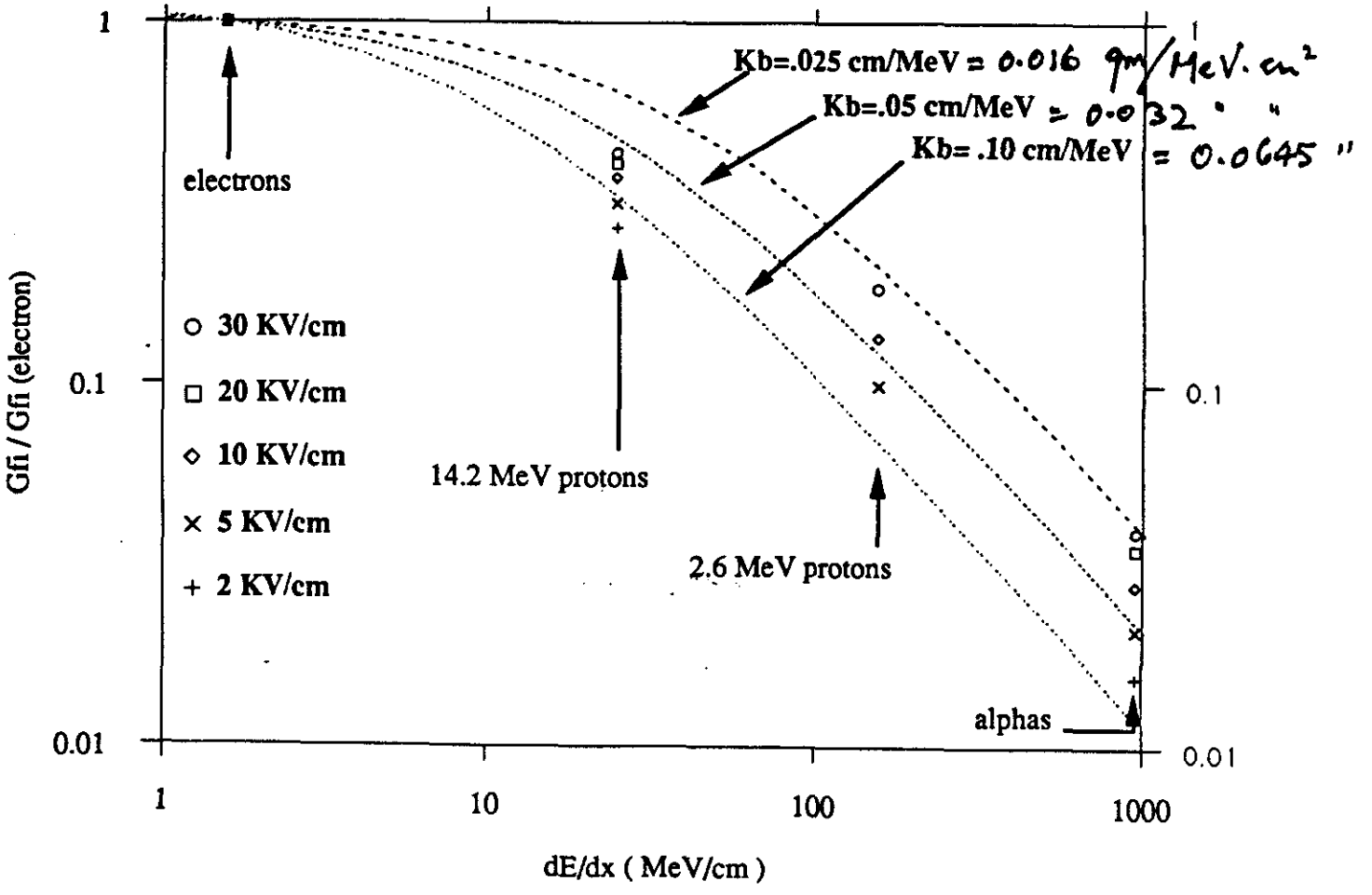

Fig. 4

CALORIMETER STACK-WALIC

- to measure e/h vs sampling ratio for Pb-TMP and Fe-TMP

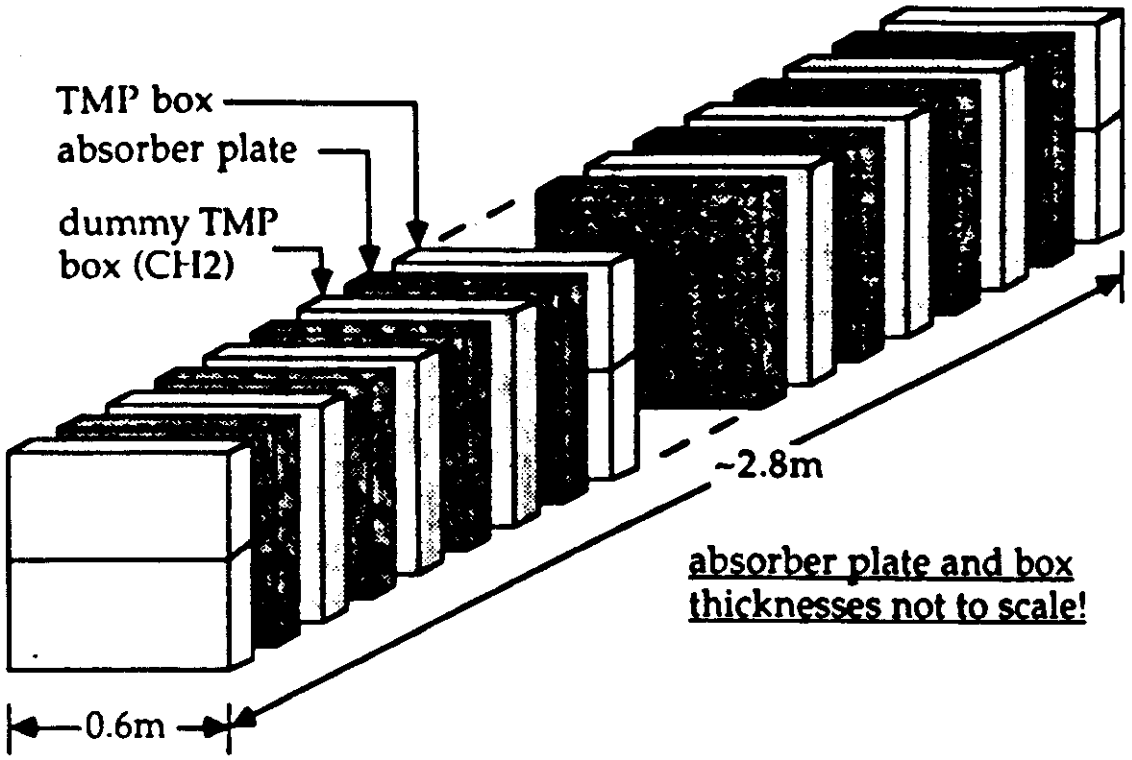

Example Stacks with Differing Hydrogen Concentrations

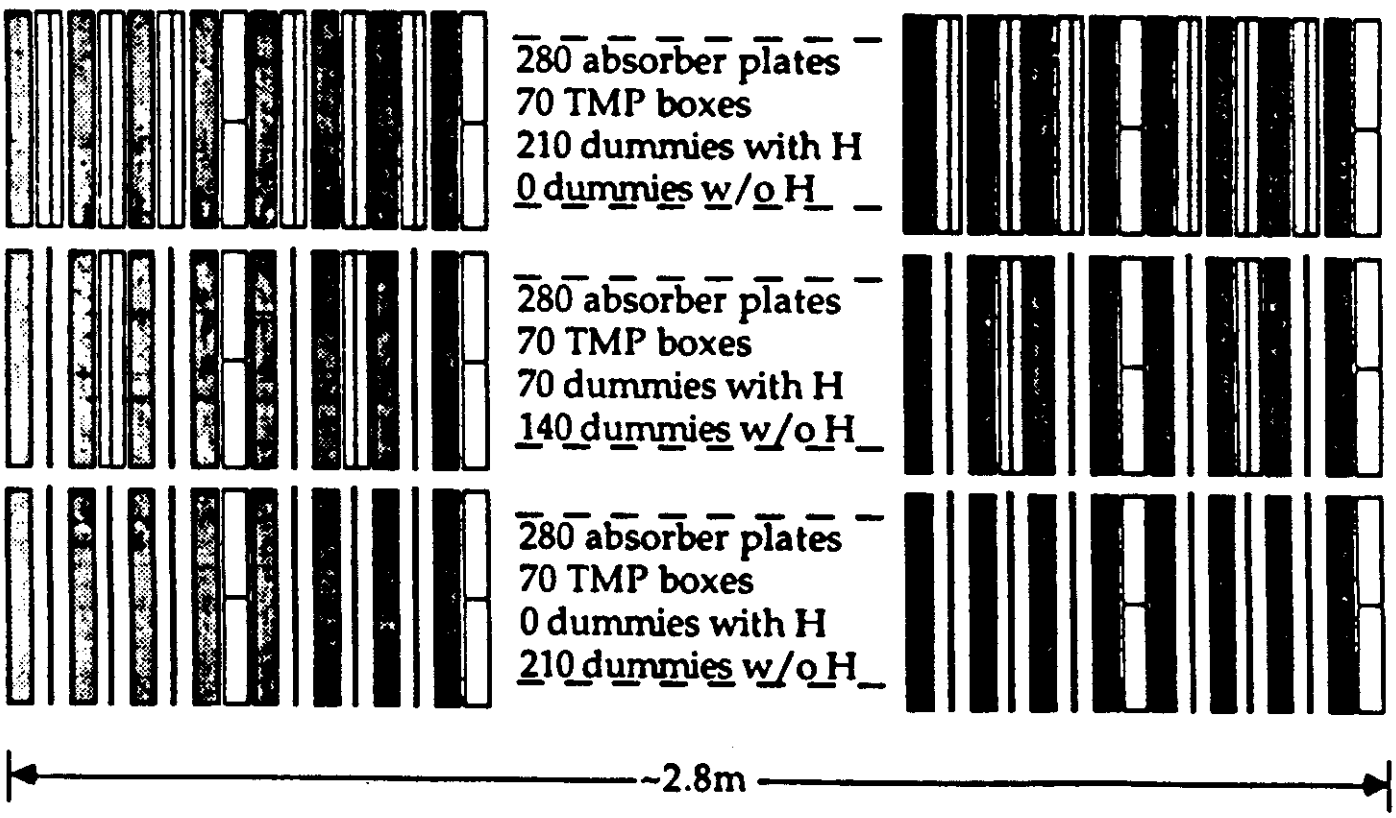

Figure 5

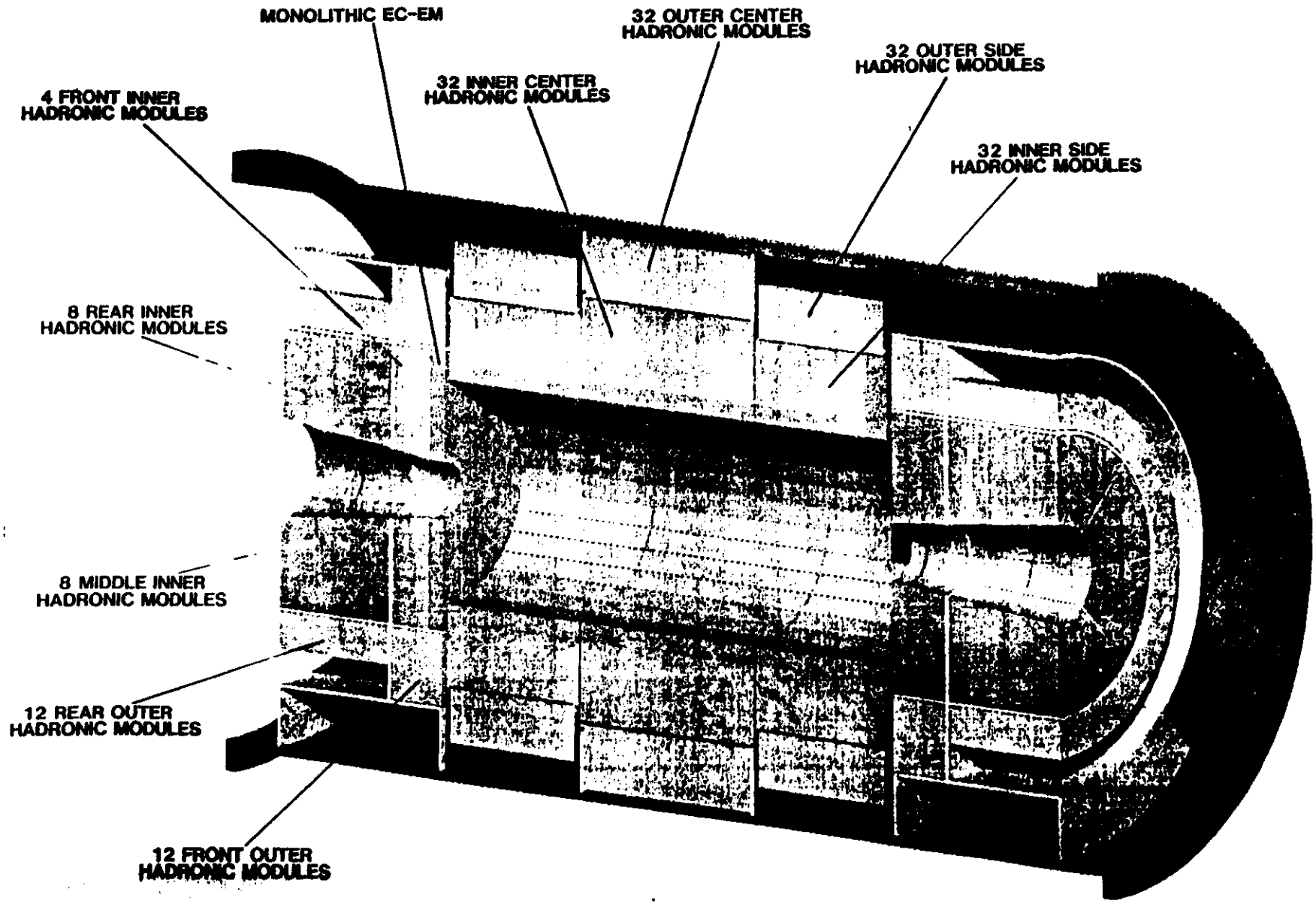

WARM LIQUID CALORIMETER

Figure 6

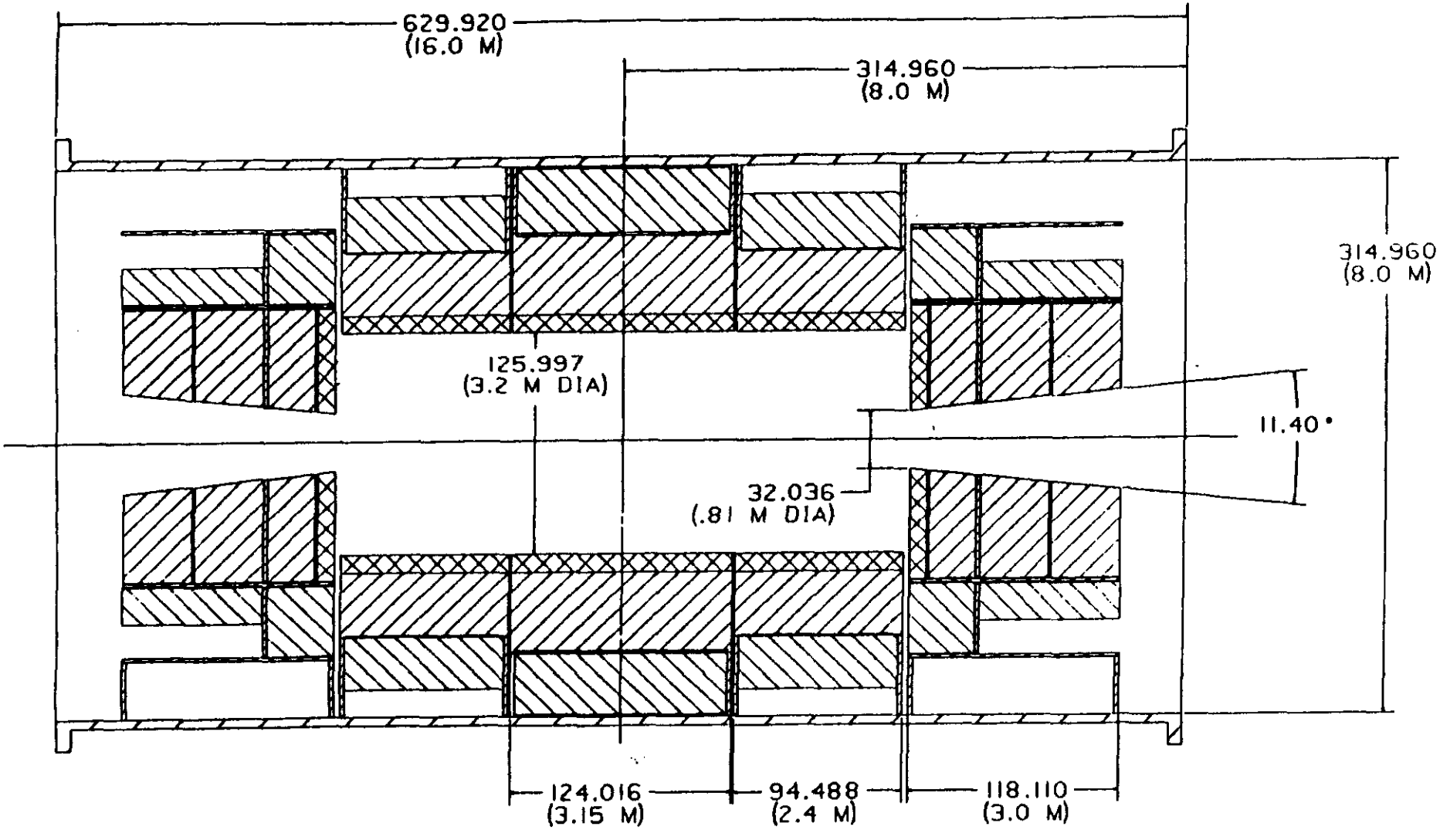
629.920
(16.0 M)
314.960
(8.0 M)
314.960
(8.0 M)
125.997
(3.2 M DIA)
11.40°
32.036
(.81 M DIA)
124.016
(3.15 M)
94.488
(2.4 M)
118.110
(3.0 M)

Figure 7

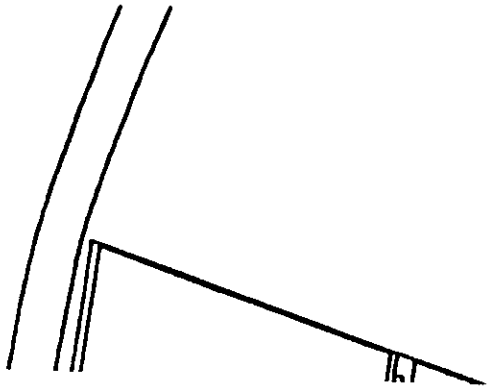

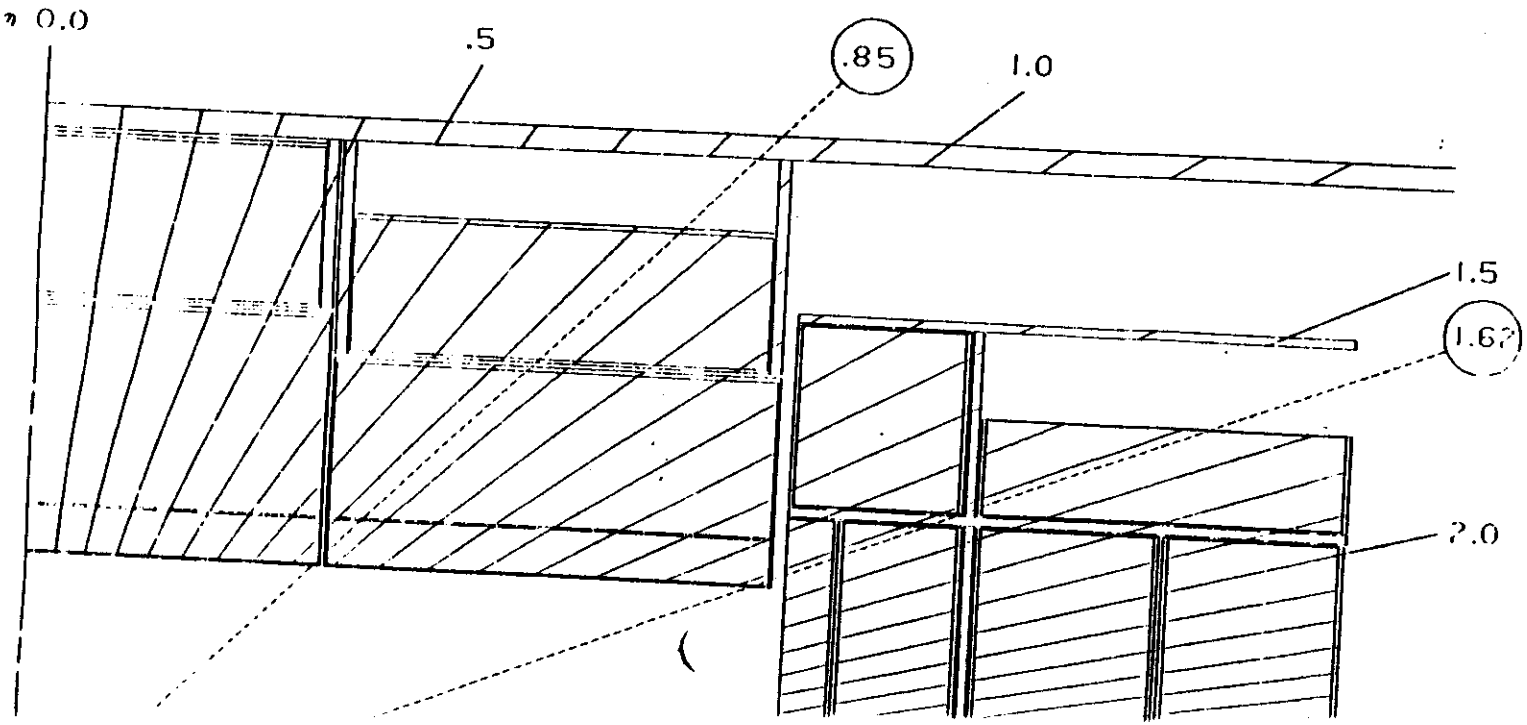
0.0
.5
.85
1.0
1.5
1.62
2.0

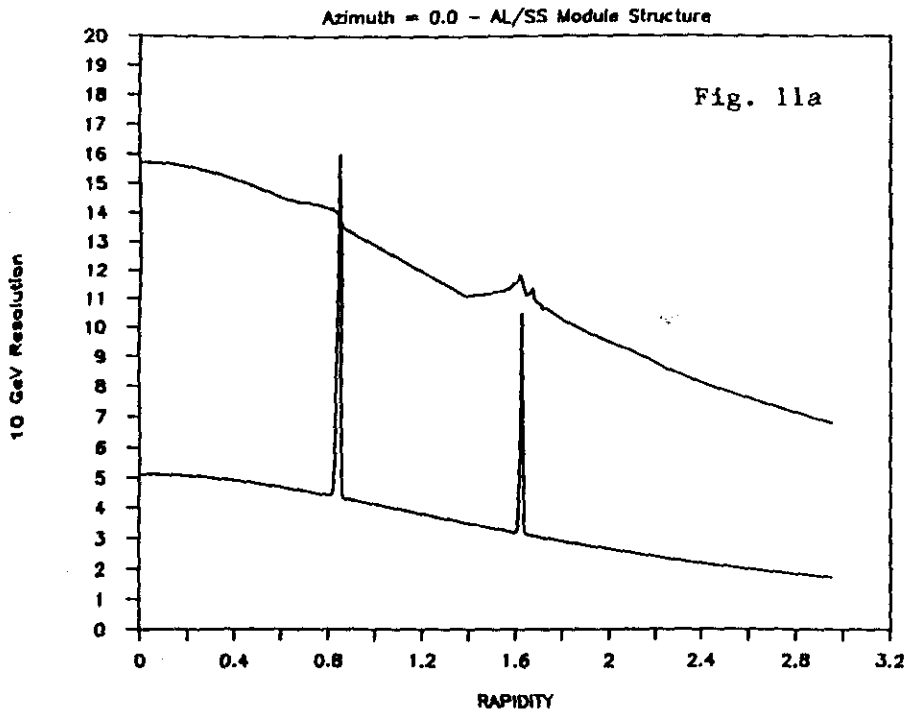
Azimuth = 0.0 - AL/SS Module Structure
Fig. 11a
10 GeV Resolution
RAPIDITY

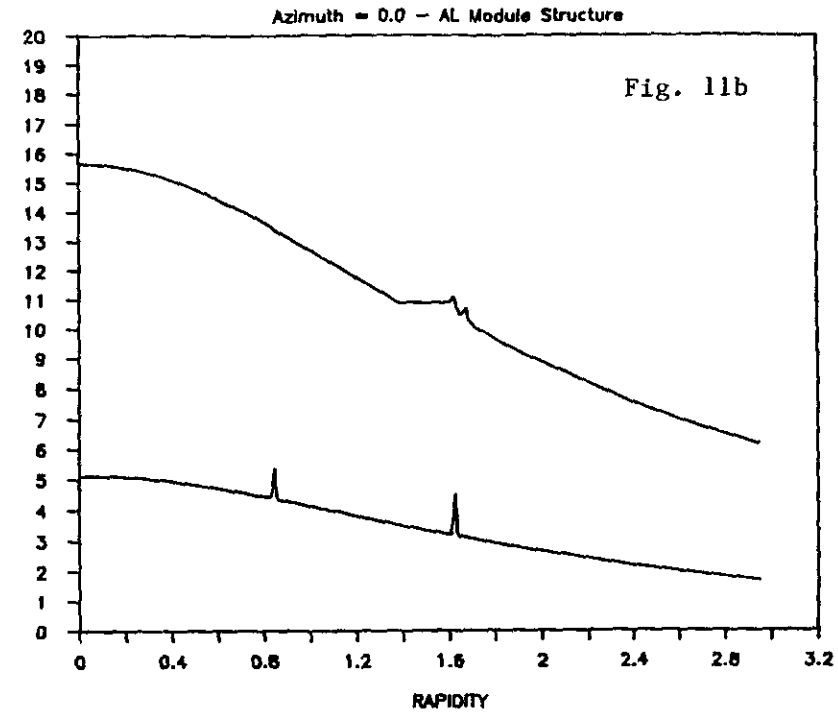
Azimuth = 0.0 - AL Module Structure
Fig. 11b
RAPIDITY

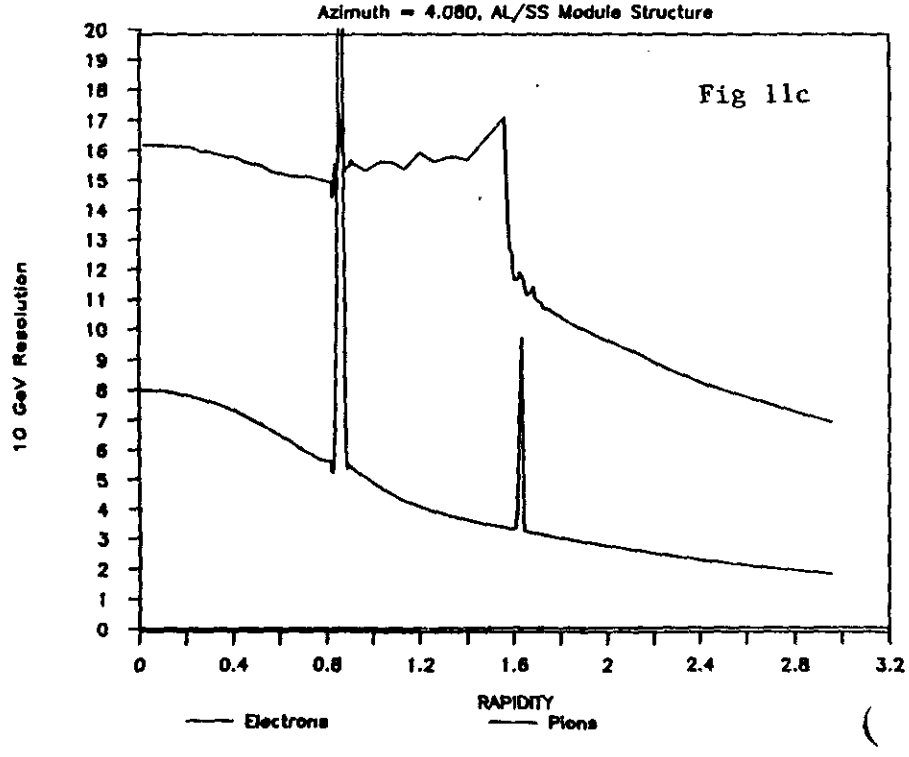
Azimuth = 4.080, AL/SS Module Structure
Fig 11c
10 GeV Resolution
RAPIDITY
Electrons
Pions

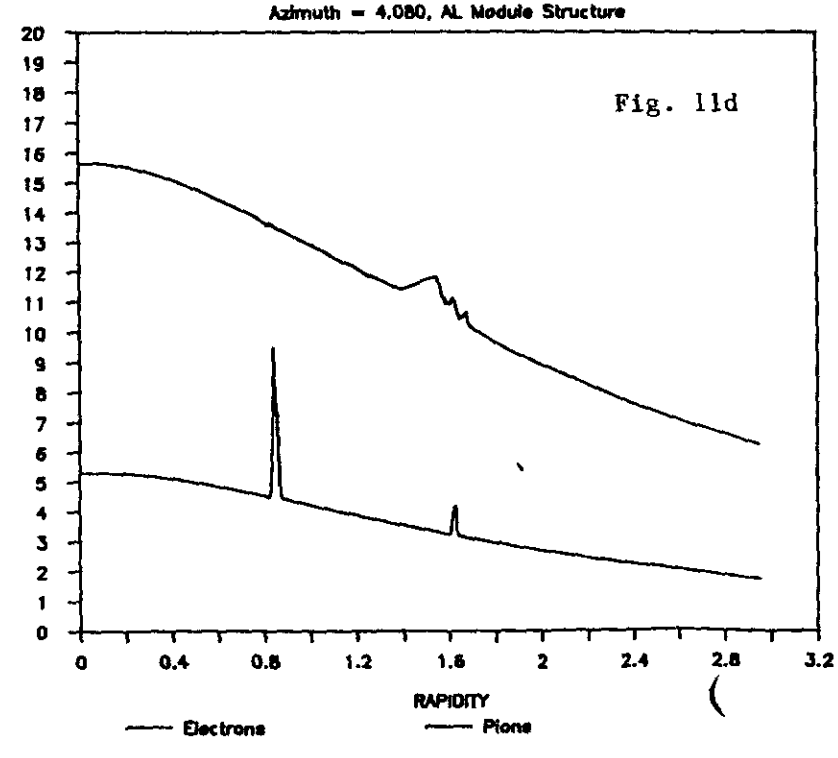
Azimuth = 4.080, AL Module Structure
Fig. 11d
RAPIDITY
Electrons
Pions

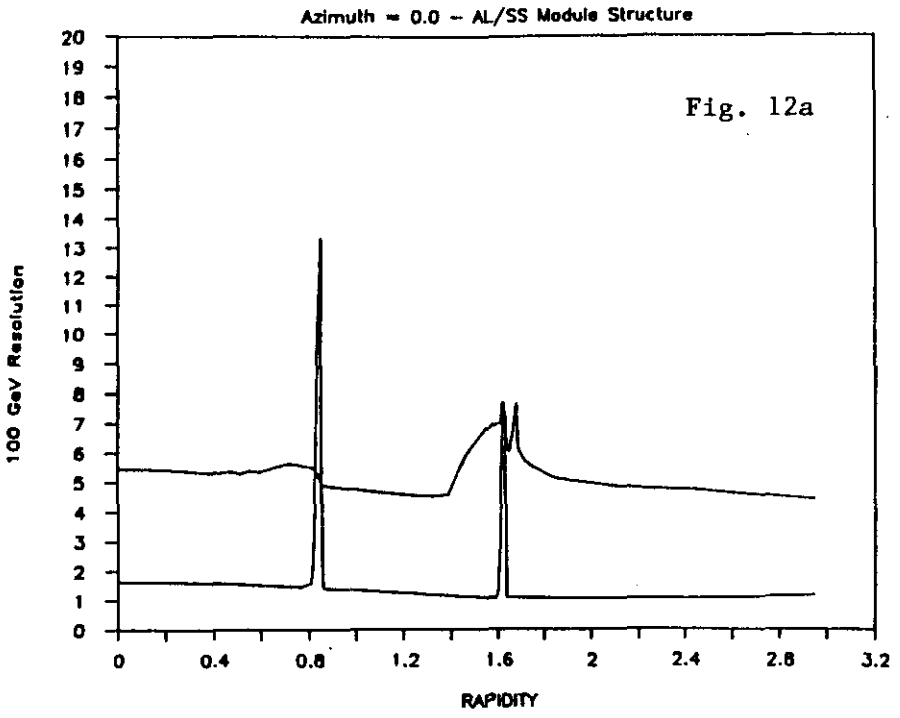
Azimuth = 0.0 – AL/SS Module Structure
Fig. 12a
100 GeV Resolution
RAPIDITY

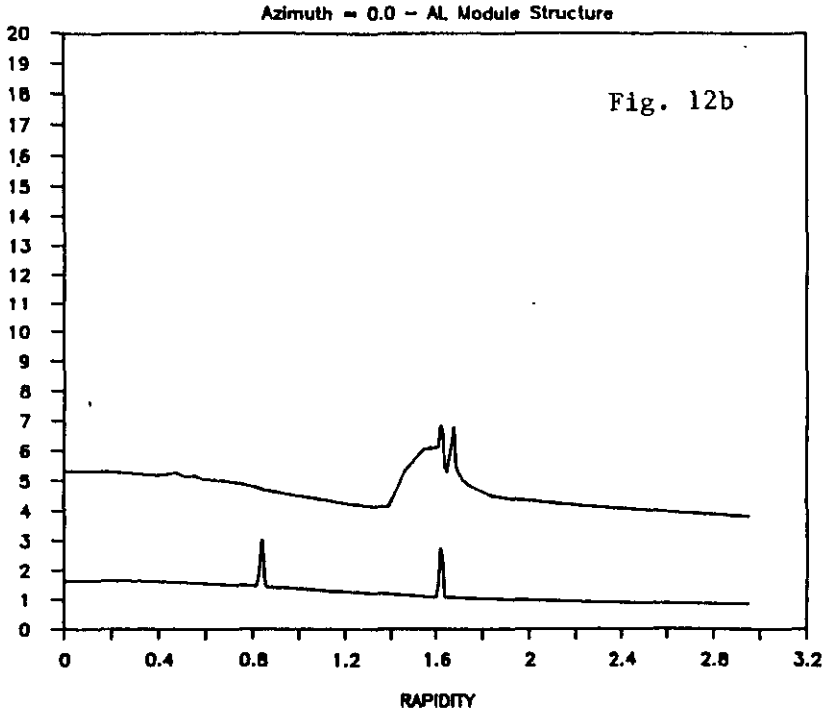
Azimuth = 0.0 – AL Module Structure
Fig. 12b
RAPIDITY

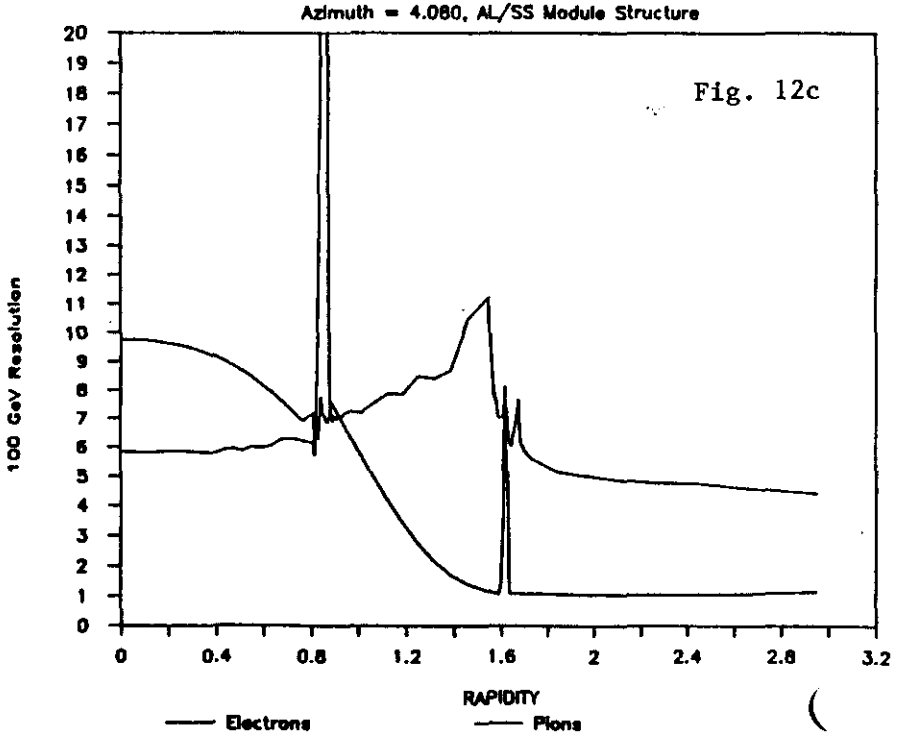
Azimuth = 4.080, AL/SS Module Structure
Fig. 12c
100 GeV Resolution
RAPIDITY
Electrons
Pions

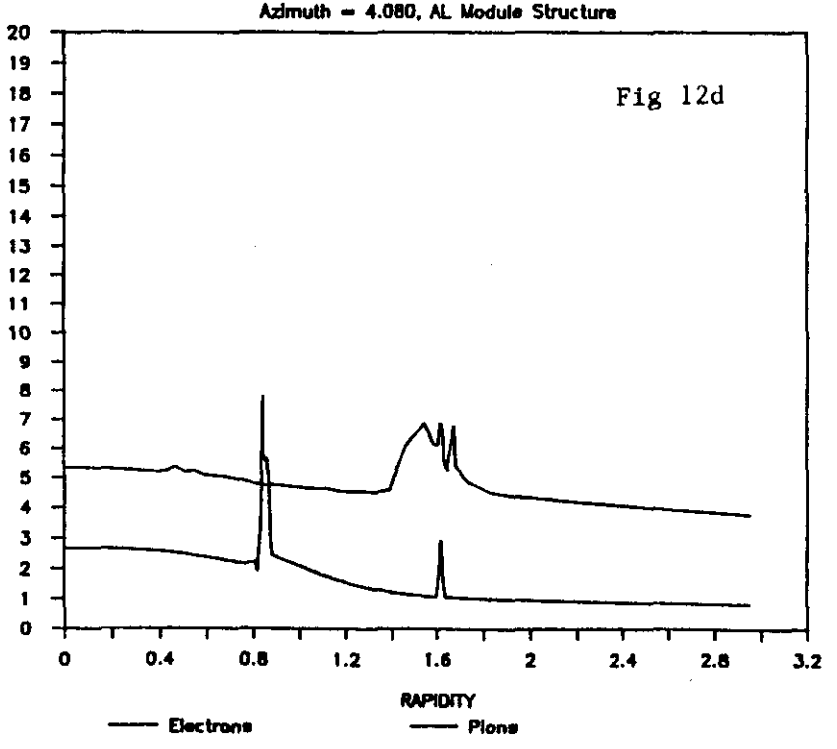
Azimuth = 4.080, AL Module Structure
Fig 12d
RAPIDITY
Electrons
Pions

WLC Test Beam Module Design and Fabrication

(Effort begins at time t=0 shown here as November 1, 1989)

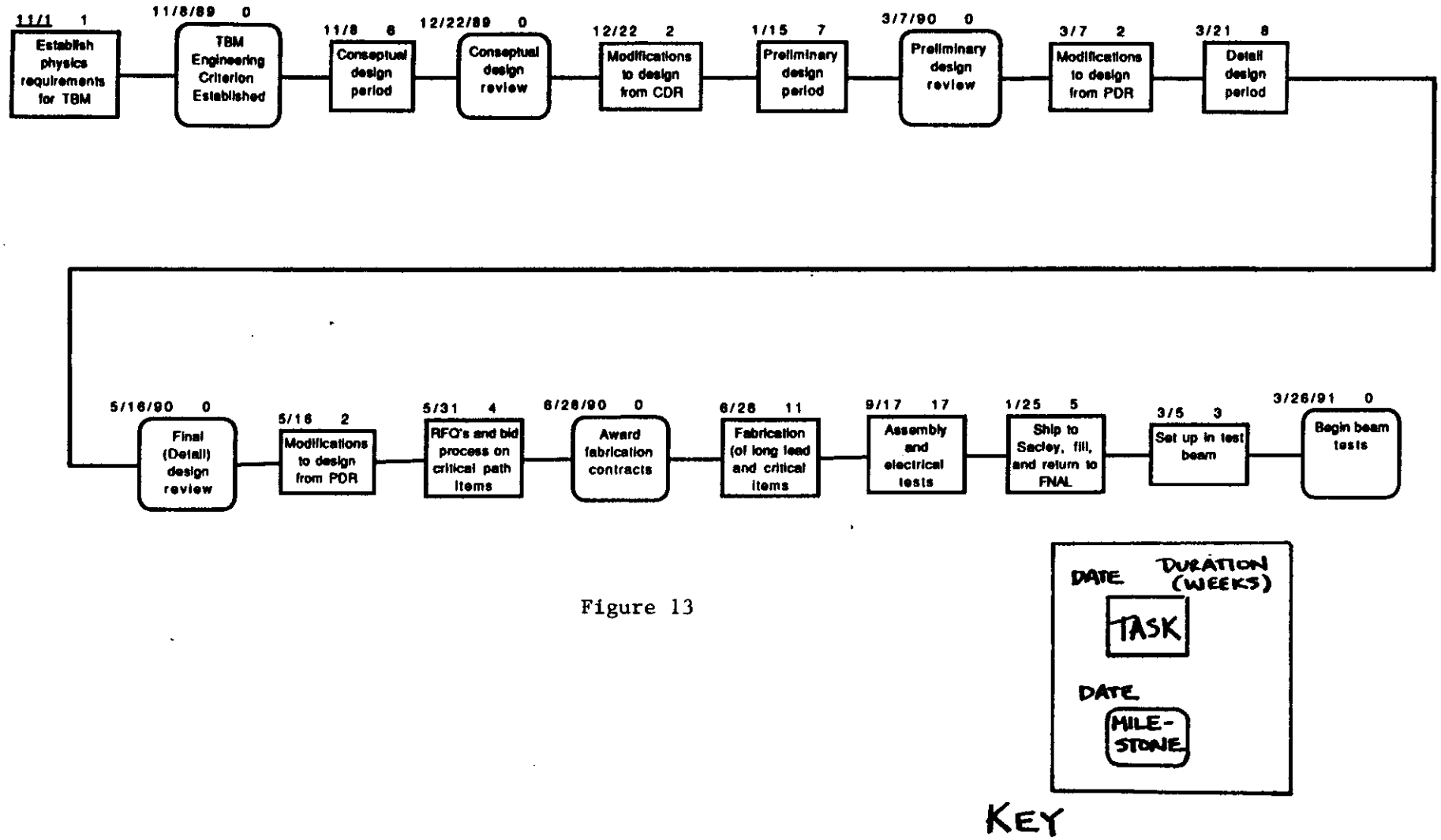

Figure 13