SSC PC-011
39 PAGES

Proposal for a Proto-type Precision and Fast Electro-magnetic Shower Counter Using Scintillating Noble Liquid (Xenon)

M. Chen, K. Masuda*, T. Matsuda
Department of Physics and LNS
MIT, Cambridge, MA 02139

S. Sugimoto, K. Okada
Department of Physics and OULNS
Osaka University, Osaka 560, Japan

M. Miyajima
National Laboratory for High Energy Physics, KEK
Tsukuba, Ibaraki 305, Japan

T. Doke
Science and Engineering Research Laboratory
Waseda University, Tokyo 162, Japan

M. Mutterer
Institute for Nuclear Physics, Technische Hochschule Darmstadt
6100 Darmstadt, Bundesrepublik Deutschland

W. Wallraff
I. Physikalisches Institut
RWTH Aachen, D-51 Aachen, Bundesrepublik Deutschland

Abstract

We propose to build a proto-type EM shower counter, consisting of an array (10 x 10) of real size cells, using the scintillation light output of liquid xenon, detected by layers of UV light photo sensors, developed specifically by us for the 170 nm UV scintillation light from liquid xenon, to measure the energy resolution, longitudinal and transverse shower development of electrons and photons, as well as the e/π ratio. So far, we have built and tested scintillating and ionization liquid xenon or argon detectors of one quarter of the length of the real size cells, which demonstrate that they are intrinsically fast, precise, linear and radiation resistant.

* K. Masuda, permanent address: Saitama College of Health, Saitame, Japan

I. Need for Precision Electron/Photon Detectors

The search for new particles such as the Higgs or a new heavy weak boson at hadron colliders requires high luminosity, which can result in large pile-up effects and high radiation damage to the detectors [1]. One needs high precision EM calorimeters, with fast response, and radiation-hardness to clearly identify and reconstruct the invariant masses of these particles in their two-γ, or four lepton, etc. final states.

For example, consider the case of Higgs decaying into four leptons via the intermediate state of a pair of weak bosons. For Higgs mass below 300 GeV, one needs good energy resolution in order to identify the signal and measure the width of the Higgs. When the Higgs mass is very large, even though the width of the Higgs becomes quite broad, larger than a few percent of its mass, one still needs high resolution to reconstruct the invariant masses of some narrow intermediate particles, such as the weak bosons. One such example is shown in Fig. 1 for the reaction:

$$\begin{aligned} p + p &\rightarrow H^o + x, \\ &\rightarrow Z^o Z^o, \\ &\rightarrow lepton\ \ pairs \end{aligned} \tag{1}$$

and the background contribution from heavy quark decays, i.e. a t quark with mass equal to 100 and 200 GeV, produced via the following reaction:

$$\begin{aligned} p + p \rightarrow t\bar{t} + x &\rightarrow 2W + 2b + x, \\ &\rightarrow lepton\ \ pairs + x \end{aligned} \tag{2}$$

In Fig. 1a the lepton energy (E) resolution of 4%E with E in TeV has been assumed while in Fig. 1b, a constant resolution of 10% was assumed. We see clearly the importance of having a good resolution in order to reduce the background and to clearly identify the real nature of the process [2].

Do we also need high resolution for low energy particles? For new particles with width less than a few percent of their masses, the signal to noise ratio in general increases with the resolution of the detector until the resolution becomes comparable to the widths of the new particles. For instance, for a Higgs mass between 80 and 200 GeV, the best signals are the two-γ and 4 lepton final states (Figs.2 and 3). For a Higgs decaying into 4 leptons via the two Z^o intermediate state, one pair of the leptons prefers to have an invariant mass of the z^o. This leaves little energy (M_{Higgs} - M_Z) for the second pair of leptons. The energy of one of the four leptons can be as low as a few GeV. Therefore very good electromagnetic energy resolution for electron energy of a few GeV is required in order to detect the Higgs boson in its four lepton decay modes, which is one of the most promising signals for the Higgs [3]. The better the resolution, the better will be the measurement on the mass and the width of the Higgs. The conclusion is that we do need good resolution for GeV particles. For the LXe detectors proposed here, the aim is to get 0.5% energy resolution for a few GeV energy electron/photons.

Fast detectors in general have fewer random background events associated with the trigger and thus less pile up problems. Since more than 40% of the jet energy is expected to be deposited in the EM shower counters, only those hadron calorimeter cells located behind

[1] M.G.D. Gilchriese, Editor, SSC-SR-1035
[2] M. Chen *et al.*, MITLNS-163 and p.95 Proceedings of the SSC Berkeley Workshop (1987)
[3] J.F. Gunion *et al.*, UCD-87-28; D.A. Dicus et al., MAD/PH/389, 1987; M. Chen *et al.*, MITLNS-166 and contributions to the Snowmass Workshop(1988) on SSC Detectors

large energy hits in the EM cells are likely to have also large energy hits. Since the chance of picking up random hits due to spurious events (not associated with the trigger) is proportional to the solid angle, a fast EM shower counter can thus alleviate the pile up problem for hadron calorimeter counters situated behind. In this sense, the proposed xenon EM counter can help the follow up hadron calorimeter in picking up the relevant hits for jets under heavy background conditions.

II. Noble Liquid Detectors

We propose to build a promising new type of calorimetry using scintillating noble liquids [4]. A liquid xenon detector could serve as a fast, precise and radiation resistant EM shower counter for many of the detectors studied during the 1987 SSC Workshop at Berkeley, which need compact calorimeters, for example, the L3+1 detector, the Small Solenoid Detector, the Toroidal Detector and the Non-magnetic Detector. A scintillating liquid argon or krypton calorimeter, read out by layers of the silicon photo-diodes and sandwiched with lead/uranium absorbers and doped with small amount of xenon to increase the speed of the light signal, on the other hand, could also be used for general purpose hadron calorimeter counters. In this proposal, we concentrate on the xenon EM shower counter.

Some relevant physical properties of LXe (also LAr), such as the triple temperature (161° K), specific density (3.1), radiation length (2.8 cm), scintillating and ionization parameters etc. are shown in Table I. We see that xenon can be used both as scintillator and for ionization chambers. Other noble liquids such as argon and krypton have lower density and critical temperature, and longer radiation length. They also need doping (e.g. 2% of N_2) to increase the scintillation speed and are thus more difficult to use than xenon.

We, and others, have built and tested many noble liquid detectors of the size of a few hundred cm^3 (for example, see Fig.4). The results have been published [6,7,9,10,15,16,17,19,21,22] in recent years. The following important properties of LXe, satisfying the stringent requirement of high luminosity machines like the SSC/LHC, have been experimentally established and we elaborate on the importance of these properties with respect to the physics at the SSC:

1. Speed: The drift velocity as a function of field strength of some common liquids are shown in Fig. 5. As seen, the fastest known ionization media at low field are noble liquids such as argon and xenon while at high field strength is the TMS liquid[5]. On the other hand, as shown in Table II and Fig. 6, the scintillation signal of liquid xenon, with a peak wave length of 168 nm, (Fig. 6a) is several orders of magnitude faster than the ionization signal of all of these media in Fig. 5 (under normal conditions, say a drift distance of a few mm and an electric field of a few KV/cm). Fig. 6b, in particular, shows the dramatic contrast in speed between scintillation and ionization signals in a LXe chamber. As seen in Fig. 6a, for α particle, LXe has been measured to have a decay time of 4 ns for 96% (at t=0) of the light and 22 ns for the slow component; for β particle, the ratio of the fast (4 ns) to slow (45 ns) components at t=0 is 0.1. The large pulse height together with such a sharp rise time makes it possible to obtain a resolution of much less than 1 ns.

2. Radiation resistant: Each cell of a xenon EM counter (Fig. 10b and c) has the following components:

a. Scintillating medium: liquids have no fixed surface to be damaged. Liquids such as xenon and argon are stable and insensitive to radiation damage, in contrast to all other types of scintillators. They can also be purified and recycled easily, in case of contamination.

b. Light detectors: The radiation hardness of surface barrier photo sensors, such as the proposed silicon photo-diodes made specifically by us to detect the UV scintillation light

[4] M. Chen *et al.*, Nucl. Inst. and Meth. A267 (1988)43, MITLNS-164, MITLNS-165 and MITLNS-166 and contributions to the Berkeley Workshop (1987) and Snowmass Workshop(1988) on SSC

[5] Andries Hummel and Werner F. Schmidt, Radiation Research Review, 5 (1974) 199; R.A. Holroyd and D.F. Anderson, Nucl. Instr. and Meth. A236(1985)294-299; S. Ochsenbein SIN preprint (1987); D.F. Anderson, Fermilab, Batavia, IL; C. Rubbia and Werner F. Schmidt, UA1; and S. Ochsenbein, SIN, Private Communications. TMG: S. Geer et al., BNL 43155, Aug. 1989.

of LXe, might improve by about two orders of magnitude, from a typical value of 10^6 rad to 10^8 rad, when they are immersed in cold liquids. We propose to test this under realistic conditions.

c. Reflectors: We use metal UV reflectors such as thin Al foils coated with MgF_2, which is stable and has a UV reflectivity of 80%, fastened onto the container of LXe. They are also immune to radiation damages.

d. Electronics: This is a general problem for a high luminosity collider. We will not address it here in details, except mentioning two aspects specific to LXe: Part of the electronics (pre-amplifiers) could be immersed in cold xenon liquid to increase radiation hardness and the rest could be situated far away from the interaction region. The large light output of LXe results in a large signal to noise ratio. Thus signals can be carried over relatively long distances to avoid radiation damages.

3. Energy resolution and linearity: The size of signals and the dynamical range of some relevant media such as xenon, argon, NaI, BGO, TMS and TMP are shown in Table II. The scintillating light output from liquid xenon [6] is comparable to that of NaI and two orders of magnitude larger than that of BaF_2. For electro-magnetic showers, liquid xenon, due to its high density, small radiation length (2.8 cm) and high light yield (2.8×10^6 photo-electrons/GeV in 4 ns for beta particles), could achieve an excellent energy resolution of better than 1 % for a few GeV electrons/photons, which is important, for example, for the immediate mass Higgs.

   To be specific, with our detector (Fig. 4), for one GeV of energy loss, the scintillating light output from liquid xenon for a beta particle has been measured to be 4×10^7 UV (170nm) photons for a gate width of 50 ns, and 4×10^6 UV (170nm) photons for a gate width of 4 ns. This is more than two orders of magnitude larger than that of BaF_2. This large number of photons allows one to use photo-diodes, which has no amplification, without being swamped by noise. With a quantum efficiency of 70% (e.g. the silicon photo-diodes developed recently by us) and an uniform light collection efficiency of 50%, the number of photo electrons/GeV for beta particles with 4 ns time gate is (each UV photon makes two electrons on average):

   $4 \times 10^6 \times 0.70 \times 0.50 \times 2 = 2.8 \times 10^6$ photo-electrons/GeV

   The energy resolution at low energies is dominated by the noise of the silicon photo-diodes, which has been measured to be 5×10^4 electrons for an area of 50 cm^2. This yields an energy resolution of 2%/E(GeV) due to noise and statistics alone, and also a large signal to noise ratio which is important at SSC environment, in order to be insensitive to other sources of noise (e.g. due to electronics or uranium).

   As seen in Fig. 8, the free electron yield produced by a equivalent minimum ionization particles (mip) in LAr is much larger than TMP. The LXe signals are 2.5 times bigger than LAr. A typical measured spectrum (Fig. 9) using the ionization liquid xenon detector [7] shows a resolution of 1% at 1 MeV.

   Linearity: The measured ratio of light output over energy loss, dL/dE, for LAr and LXe is shown in Figs. 7b and c. We see that argon and xenon do not saturate (this is due to the saturation effects) up to an energy loss of 5000 MeV/g/cm^2 (due to relativistic La ions) which is again two orders of magnitude better than NaI and BaF_2. Fig. 7a shows that the sum of the scintillating and ionization energy is linear up to 10^4 mip.

[6] M. Mutterer Nucl. Inst. and Meth. 196(1982)73; A. Hitachi et. al., Nucl. Inst. and Meth. 196(1982)97; K. Masuda et al., Nucl. Inst. and Meth. 160(1979)247.
[7] E. Aprile et al., Nucl. Inst. Methods A261(1987)519

4. e/π and jet energy resolution.

For jets, we need both excellent angular and energy resolutions. The first can be achieved by using calorimeters of high granularity (see items 5. and 6. below) while good jet energy resolution needs careful studies of the delicate compensation effects through nuclear interactions in hadron calorimeters which we will not discuss here, but assume it has been done.

For an EM shower counter, e/π refers to the relative light output for the same amount of energy loss, E_{loss}, of a high energy electron or pion. E_{loss} is the difference of the incoming particle energy and the total energy of the outgoing charged particles, photons, and neutrons which presumably can be measured by a fully compensated hadron calorimeter situated behind the shower counter.

There are two main mechanisms which make e/π ratio of many common EM shower counters, such as lead glass, NaI, and BGO etc. (see Table II), to be much larger than one:

1. nuclear binding energy loss in deep inelastic hadron-nucleus interactions to break up nucleus. This loss is there for all material;

2. saturation: hadrons produce heavy ions via nuclear interactions. In most common scintillating materials, dL/dE for heavy ions can be significantly lower than that of electrons due to saturation and also due to the fact that sometimes electrons and hadrons excite the same media to different energy levels. The measured values of dL/dE for plastic scintillator, NaI and LXe are shown in Fig. 7b. We see both plastic scintillator and NaI saturated badly for heavy ions. On the contrary, LXe saturates at two orders of magnitude higher energy density. In LXe, dL/dE for relativistic heavy ions (lighter than gold), having more electrons-ion recombined to produce light, is 50% larger than that of electrons. LXe also measures the recoil energy of neutrons. These effects compensate well the nuclear energy loss discussed in item 1. and should make LXe e/π close to 1;

Thus for a linear and scintillating shower counter such as liquid xenon, we expect that the e/π ratio can be adjusted to be much closer to one than other scintillators such as BaF_2, NaI and BGO etc. Indeed, assuming that the xenon detector is followed by a compensating hadron calorimeter (e.g. uranium-TMS sandwich counter), Monte Carlo calculations have shown that the e/π ratio can be adjusted to be close to one [8] in a short time gate (10ns). We note that most hadron calorimeters achieve e/π =1 only with very long time gate (>100ns) in order to catch slow neutrons.

We propose to measure this e/π ratio in an array (10x10) of LXe detectors surrounded by compensating hadron calorimeters to confirm the Monte Carlo prediction of e/π being close to 1 for LXe.

5. Spatial resolution. This is useful for the reconstruction of the invariant mass of electron and photon pairs. Since the walls for liquids are only for optical purpose and do not have to support the weight of the liquid, they can be thin and finely divided. There is no clearance between the walls and the scintillating media, as in the case of crystals. Clearance causes large corrections, dependent on the position of the impact point and incident angle of the *incoming particle, in the measured shower energy of electrons/photons.*

The noble liquid detectors can be divided into small cells (Fig. 10a) , about 2.2 degrees in both θ and ϕ angles at θ (Fig. 10b) around 90° and the size in θ can be reduced to 1 degree at θ around 10°, corresponding to a pseudo-rapidity interval of 0.03 at $\theta = 90°$, 0.05 at $\theta = 45°$

[8] H.S. Chen *et al.*, MITLNS-164 and contribution to the Berkeley Workshop; H. Fesefeldt, PITHA (Aachen) preprint, Nov. 1987.

and 0.06 at $\theta = 15°$. For $\theta < 15°$, these detectors could be sandwiched with uranium/lead plates to reduce the equivalent radiation length to about 15 mm (Fig. 10c) . The energy distribution of a 100 GeV electron in such an array of xenon cells, simulated by Monte Carlo program, is shown in Fig. 11. As seen, typically 62% of energy is concentrated in one or two cells. This lateral shower distribution can be used to determine the impact point to better than 2 mm, without having to use complicated corrections dependent on the impact point and angles as in the case of crystals.

6. Measurement of 3-D shower profile. As shown in Fig. 10b, in the central region, we propose to use 3 layers of silicon photo-diodes to measure the energy in the pre-shower, shower maximum and shower tail regions, and in the forward regions 10 layers of photo-diodes sandwiched with U/pb absorbers to shorten the effective radiation length of the detector to 15 mm and make it more compact (Fig. 10c). One could also use 20 layers of photo-diodes sandwiched with U/pb absorbers to further reduce the radiation length. In this case, one could also, at a sacrifice of energy resolution at low energies, replace LXe with LAr doped with 2% of N_2 (Fig. 10d). Both transverse and longitudinal shower distributions help to distinguish electrons/photons from hadrons and π^o's.

7. Correlation of Scintillation with Ionization. We note that both scintillation light (fast) and ionization (slow) signals of xenon give large outputs, while the slow component of the scintillation light decreases by up to a factor of three in a strong electric field. It has been shown that the energy sum yields excellent resolution and linearity (Fig. 7a) while the timing difference between the two signals from a single counter can yield precise spatial information with a resolution better than 30μ (Fig. 12) in the case where incident particles are isolated. Fig. 13 shows the correlation of ionization with scintillation measured by E. Shibamura et al.[9] using a LAr chamber. The measurement of the impact point and the shower profile is valuable to distinguish electrons and photons from hadrons (e.g. π^o's). This will be left for future development, not included in the present proposal.

[9] E. Shibamura et al., Proceedings of ECFA Workshop at Barcelona, Spain, Sept. 1989
References [10] to [19] are listed under Table II.

III. Proposed full size detector and related R&D.

As described earlier, all of the existing work up to now is based on detectors of about one quarter of the length of a real size cell, which should be about 22 rad. lengths long in order to contain the full shower of a high energy electron or photon. These one quarter length devices have demonstrated that the fundamental properties of Noble Liquid Detectors have the potential of satisfying the stringent requirements of a high luminosity hadron collider in speed, radiation resistance, energy resolution, linearity and 3-D shower measurement. We propose to build an array of full size EM shower counters as shown in Figs. 10b and 10c. which consists of the following major components including photo sensors, UV reflectors and LXe purifier:

1. UV photo sensors to measure the light signals from xenon (170 nm) and argon (130 nm). This is the most important part of the detector and we elaborate here in details:

a. Photo tubes: Although photo tubes have low noise and high gain, and presently available UV-phototubes could achieve high quantum efficiency for UV light, they are space consuming and difficult to work with in magnetic fields. (Fig. 15 shows the quantum efficiency for photo tubes from Hamamatsu: as seen, a quantum efficiency of 35% for xenon with tube type 250M with Cs-Te cathod and MgF_2 window or 250S with Cs-Te cathod and silica window and 22% for argon with tube type 150M with CsI cathod and MgF_2 window are reachable.) Photo tubes also need either (UV) transparent windows and/or wave length shifter. Both are difficult to make in large quantity and unstable in nature, often causing drift in gain and/or leaks. We worked hard to eliminate all of these and succeeded finally in doing so, as described in the next paragraph.

b. Our silicon photo-diodes: commercially available photo-diodes have poor quantum efficiency for UV light, partly because of the thick windows commonly used by commercial photo-diodes. To be transparent to UV, the thickness of the window must be much smaller than the wave length of the UV light, which is 170 nm in the case of LXe. Therefore we set out to develop our own devices and have recently successfully made and tested several fast UV sensitive silicon photo-diodes with very thin (30 nm presently and maybe as thin as 15 nm in the near future) and thus UV transparent window (Fig. 14). They have a quantum efficiency of about 70% and a shaping time of 10 ns[20]. The noise level for 10 ns shaping time is measured to be 3 x 10^4 electrons for a 25 cm^2 device. It can work directly in the xenon liquid. The relevant properties of this photo-diode are summarized in Table IV.

Other candidates, including vacuum and avalanche photo-diodes, (e.g. UHVC20 from Valvo, which has thin Al_2O_3 window, a rise time of 0.25 ns, 20 mm diameter and a UV quantum efficiency of 20%) will also be tested. We will also compare our results with detectors using other efficient photocathodes which could also convert the scintillation light into charge. One such example is given in reference [21]. Our approach is similar in principle, but much simplier in construction than the detector currently being developed by an independent group of T. Ypsilantis et al. at CERN (by eliminating all the anode wires in each cell, which are needed to take away the electrons from each of the photocathdes in their device). But we believe that ours is already close to the optimum.

Conclusion: Our photo-diodes are compact, fast and suitable to work inside a magnetic field. It greatly reduces the complexity in the construction of the detector by eliminating UV transparent windows and/or wave length shifter. It also allows us to measure the longitudial shower development. By inserting absorbers behind each photo sensor, one can

[20] T. Doke, Proceedings of ECFA Workshop at Barcelona, Spain, Sept. 1989

[21] e.g. V. Peskov et al., Nucl. Inst. and Meth. A269(1988)149 and T. Ypsilantis, Proceedings of ECFA Workshop on detectors at Barcelona, Spain, 1989

reduce the effective radiation length of the EM shower counters for the forward regions (Fig. 10c).

It could also open up the possibility of using many layers of our silicon photo-diodes to detect the scintillation light of other noble liquids such as LKr, LAr or liquid scintillators etc., sandwiched with absorbers to further reduce the radiation and the interaction lengths, for EM shower counters (with worse energy resolution at low energies), and for hadron calorimeters. We encourage others who are interested in such detectors to consider this new approach and compare with other more conventional methods.

2. Walls between the cells and UV reflectors: the cell walls are used to reflect UV light, not to support the weight of the liquid. Therefore the walls can be made of thin UV reflecting foils, with small grooves to allow the liquid to flow from cell to cell, causing practically no dead space and no deterioriation in energy measurement. A list of UV reflecting material with reflectivity about 80% to 90% is shown in Table V. Due to the strong focusing effect of the tapered cells, the best material is not necessarily the one with the highest reflectivity. One needs to achieve high uniformity in the light collection efficiency along the cell, similar to the case of BGO crystals, in order to achieve the best energy resolution. This can be tested and decided only after a real size tapered cell is available.

3. Purifier: One high performance purification system (to achieve less than a few ppb of impurity) using the phase transition property of NaK (Fig. 16), for Liquid xenon has been studied and is shown in Fig. 17: NaK is very active when dropped as liquid with clean surfaces into LXe, where it turns into solid and absorbs impurities. Solid NaK are then removed from the bottom to the top region (-10° C) to return to the liquid state, stirred to obtain fresh surface to be reused again.

After the full size cells described above are constructed, one can then proceed to carry out the following R&D on the physical properties of the detector:

4. Measurement of the light absorption length of liquid xenon and argon in a tapered cell (see Fig. 10b and Fig. 18) using radioactive isotope sources and vacuum-UV lights, and to measure the dependence of the light output and light absorption on the purity of the liquid [22].

5. Test of radiation hardness of the detector, i.e. photo-cathodes and electronics. We note that the radiation hardness of the silicon photo-diodes might improved significantly when they are immersed in a cold liquid like xenon.

6. Design, build and test an array of full size tapered xenon shower counters (Fig. 19), consisting of 3 x 3 cells at first and later 10 x 10 cells. Measure the uniformity, energy resolution, linearity, 3-D shower development and the e/π response in intense beams, including pile-up and pedestal subtraction due to finite gate width.

[22] E. Aprile et al., Proceedings of ECFA Workshop at Barcelona, Spain, Sept. 1989

IV. Conclusion

Precise, compact, fast and radiation-hard detectors are clearly desirable in any detector at the SSC. Scintillating liquid xenon detectors of a size up to a few hundred cm^3 (i.e 1/4 of the length of a full size cell) have shown that they can satisfy the stringent requirements of the SSC in speed, resolution, linearity, radiation hardness, 3-D shower measurement, and likely also the e/π ratio. Several large liquid ionization detectors have recently been built successfully. Considering the large difference in speed between scintillation light and ionization (Fig. 6b), one must raise the obvious question: why not also use the scintillation light?

We have made the key technical breakthrough in successfully making fast, windowless UV photo sensors, immersed in the liquid itself, to measure the shower development. It greatly increases the UV light detection capability and reduces the complexity in the construction of the detector by eliminating phototubes, UV transparent windows and/or wave length shifters, and allows us to measure the longitudinal shower development. By inserting absorbers in between two photo sensors, one can make the detector more compact for the forward regions. We propose to use this new technique for large system EM shower counters for the SSC.

V. Comments on the price and availability of xenon

The price for liquid xenon at the US or Europe varies between $ 2000 to 5000/liter. In the U.S.S.R., it is about 1000 Rubles/liter. (We were told that the production rate in USSR is about 10 ton (3 m^3) / year and is flexible, depending on the demand. It needs early notification and thus long term planning in order to increase the production significantly.) For the Xenon Olive Detector (Fig.10a), for example, 5 m^3 of liquid xenon is needed.

We note that an ITEP liquid xenon bubble chamber of 0.8 m^3 has been successfully in operation for several years. Another 14.3 m^3 (35 tons) liquid Kr calorimeter, KEDR Detector at VEPP-4M, is under construction and part of it has been tested in beams, showing excellent resolution, similar to that of CsI. These developments demonstrate that large noble liquid systems are feasible.

VI. PERSONNEL

Listed below in the table are the physicists currently committed to this topic from the participating institutes. Other MIT High Energy groups are also interested in this area of scintillating calorimetry and are considering to join the research effort at a later stage:

Participant	
Prof. M. Chen	MIT
Prof. T. Matsuda	MIT
Dr. K. Masuda	MIT
Prof. S. Sugimoto	Osaka Univ.
Prof. T. Doke	Waseda Univ.
Dr. M. Miyajima	KEK
Dr. K. Okada	Osaka Univ.
Dr. M. Mutterer	Tech. Hochschule Darmstadt
Dr. W. Wallraff	I. Phys. Inst. of Aachen

We request for the following additonal personnel necessary for this Task:

One Research Associate	
One Research Assistant (graduate)	
One Cryogenic Engineer	half time
One Mechanical Technician	

VII. EQUIPMENT

Some specialized equipment will have to be purchased and built. We list below the types of equipment known to be necessary at this time. The division of equipment fund among various countries is under the assumption that the project is carried out mainly in the US, i.e. at MIT, and near-by laboratories for beam testing, where physicists and technical staff from Japan and Europe will travel to work with their funding. This is our preferred arrangement. If the project is carried out in another country, e.g. at KEK of Japan, where US physicists will travel to work there, we expect the division for funding be reversed:

1.	liquid Xenon cryostat with purifier. Cryovac, West Germany	$30,000
2.	10 liters of liquid xenon	$25,000
3.	fast UV-photo-tubes and diodes, Yamamatsu, Japan.	$20,000
4.	UV light sources and monochrometer.	$70,000
5.	30 integrated preamplifiers and amplifiers.	$30,000
6.	vacuum system and pump.	$15,000
	Total U.S.A.	$190,000
7.	fast silicon UV photo-diodes and electronics, Doke, Japan.	$40,000
8.	50 liters of liquid xenon	$125,000
	Total Japanese and European	$165,000

VIII. FUNDING for US Operations, MS&T

US Budget Details for the First Year
($ x 10^3)

items:

1. operations

a. Salaries, wages (SW)[1]:	200
b. Material and services, (M&S, direct)[2]	50
c. Travel (T, direct)[3]	50
Total operations:	300
2. Equipment[4]	190

Comments:

1) Includes support for the following: i) one new research associate; ii) one research assistant (0.5py) and one undergraduate student; iii) one senior mechnical technician; iv) one design engineer (0.5py); v) Est. use of LNS Central Facilities ... machine shop (.25py at estimated cost of $35/hr);

2) Includes handling of liquid xenon and fast photo-tubes and diodes, vacuum, cryogenic systems and a rough estimate for such items as hardware, stock, electronics supplies, special gases and liquids, computer supplies, etc.

3) Related explicitly to the work of this proposal ... work in foreign participating institutes or beam tests at various laboratories; travel in conjunction with SSC detector related meetings, visits to vendors, etc.

4) See para VII. EQUIPMENT for details.

Table I

Physical Properties of Liquid Argon and Liquid Xenon*

	LAr	LXe
Atomic number Z	18	54
Atomic mass A	39.95	131.3
Triple point (°K)	83.8	161.3
Density at triple point (g/cm^3)	1.14	2.96
Boiling point (°K) at 1013 mb	87.3	165.0
Density of fluid (g/cm^3)	1.4	3.06
Gas/liquid ratio	784.8	519
Radiation length (cm)	13.9	2.8
Moliere radius (cm)	10	5.6
W-value (eV/ion pair)	23.3	15.6
Fano factor	0.107	0.041
Mobility (m^2/Vs)	0.048	0.22
Oxygen trapping constant (m^2/V)	1.5×10^{-14}	2.0×10^{-14}
Heat capacity C_p (cal/mol K)	10.05	10.7
Thermal conductivity (cal/s cm K) $\times 10^{-3}$	29.9	16.8
Refractive index	1.25	1.41

* from :
"On the Development of Liquid Ionization Detectors as Spectroscopic Instruments" by T. Lindblad et al. Nucl. Instr. and Meth. 215(1983)183

Table II. Properties of some common scintillators and ionization media.

The scintillation light decay times for both the fast and slow components and the ratio of their intensities; the saturation effect, K_B in Birk's law, for both scintillation and ionization outputs; and the light outputs of alpha and beta particles of several common media including BaF_2 in comparison with liquid xenon. T_1, T_2 are the decay time of the fast and slow component and A_1, A_2 their intensities at t=0 respectively.

scintillation	*Liquid Xe*	*BaF_2*	*NaI (Tl)*	*BGO*
fast decay time T_1 (ns)	3 [10]	0.6	250	60
slow decay time T_2(ns)	25-30	620	—	300
$ratio A_1/A_2$ for β	0.1[10]	0.09	—	0.05
$ratio A_1/A_2$ for α	25[10]			
rel. output from	0.9 [15,20]	0.006	1.	0.08
ratio of α/e [10,11]	1.1± 0.2 [10]	0.34 [11]	0.5	0.23 [14]
K_B^{-1} in MeV/cm[12]	50000 [5,20]	– – [13]	3670 [5]	500[8,14]
density (g/cm^3)	3.06	4.89	3.67	7.1
rad. length (cm)	2.8	2.05	2.59	1.12

ionization	*Liquid Xe*	*Liq. Ar.*	*TMS*	*TMP*
rel. output of a mip	12.6[16]	4.6 [17]	1[8]	1.1[3]

references [10] [11] [12] [13] [14] [15] [16] [17] [18] [19]

[10] S. Kubota et. al., Nucl. Inst. and Meth. 196 (82)101, and A242(1986) 291

[11] M.R. Farukhi et. al.,IEEE Trans. Nucl. Sci. NS-18(1971)200.

[12] The output/energy loss, dL/dE, reduces by 50% in Birk's law. See Ref.5.

[13] It is poorly defined since the size of the fast component critically depends on the particle types, such as α,e or heavy ions etc. at a given kinetic energy, see refs. 10 and 11.

[14] J. P. Martin, private communication.

[15] L. Koch and R. Leseur J. Phys. Radium 19(1958)103.

[16] T. Takahashi et.el., Phys. Rev A12(1975)1771; E. Shibamura et. al., Nucl. Inst. and Meth. 31(1975)249.

[17] T. Takahashi et.el., Phys. Lett. 44A(1973)123; M. Miyajima et. al., Phys. Rev. A9(1974)1438

[18] S. Aronson et. al., Fermilab Conf. 86/14-E

[19] M. Miyajima et. al., Nucl. Inst. and Meth. 160(1979)239.

Table III **scintillators**

		Xe	Kr	NaI	BGO	BaF_2	CH
a.radiation length*	[cm]	*2.8*	4.8	2.59	1.12	2.05	42.4
b.absorption length*	[cm]	*55*	61	41	22	30	79.5
c.Moliere radius†	[cm]	*5.6*	7.1	4.4	2.33	3.2	10.5
d.critical energy†	[MeV]	*10.5*	14.2	12.5	10.1	13.5	85
e.density*	[g/cm^3]	*3.06*	2.41	3.67	7.1	4.89	1.03
$\langle\Delta E_{mip}(1cm)\rangle$*	[MeV]	*3.79*	2.96	4.87	9.01	6.6	2.01
g.price per liter$	[SFr]	*3200*	2000	4000	8000	6000	1000

* from "Review of Particle Properties" Phys. Lett. **170B**, April 1986

† from "Calorimeters (Total Absorption Detectors) for High - Energy Experiments at Accelerators" by Seigi Iwata DPNU 3-79, February · 1979

$ for reference only:

Xe price derived from that demanded at DESY during summer 1987 for small quantities of gas at STP. US prices are significantly higher (x 2 - 3).
Kr price as envisaged for the 35 ton Novosibirsk detetctor.
BGO price for transformation of polycrystalline powder to crystals (L3); raw materials are extra.
CH ≡ organic scintillator of high quality (e.g. NE 110).

Table IV. Properties of the Proposed Silicon Photo-diode

Properties	*Si photo diode*
Shaping time (ns)	10 ns
Max. diameter	50mm
Thickness	200μ
Quantum eff.	about 70%
Noise	$3x10^4$ e/25 cm^2
Price	about 1 M\$/10^5
Radiation damage	10^6 rad. normal 10^8 rad. in LXe (to be proven)

Table V. Properties of some UV Reflectros for LXe and LAr

Wave length	*Al*	*Al+MgF_2*	*MgO + MgF_2*	*$BaSO_4$*
170nm (LXe)	80%	80%	> 90%	90%
130nm (LAr)	35%	80%	> —	85%

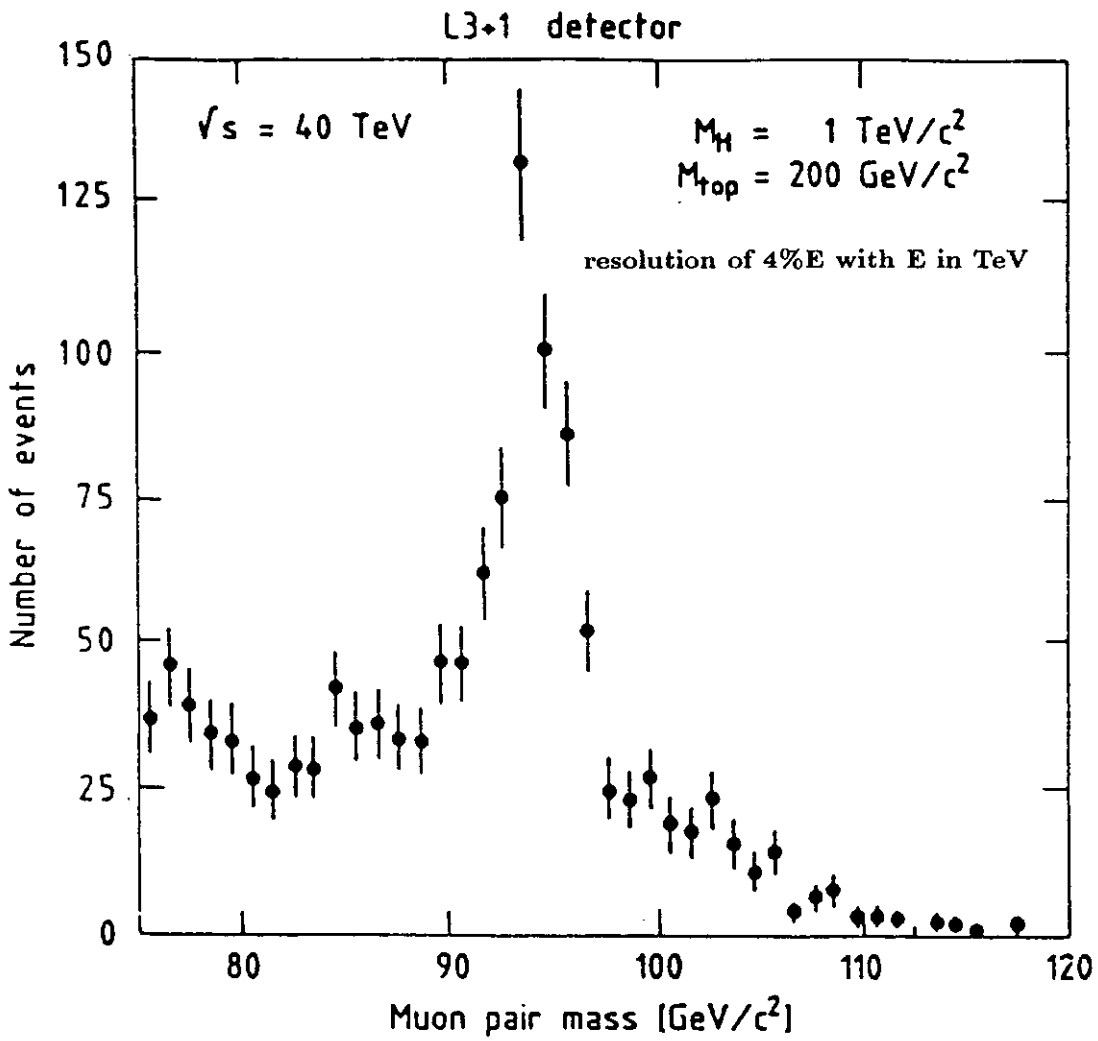

Fig. 1a The reconstructed invariant masses distributions of the dimuons from reactions (1) and (2) with with 1 Tev Higgs and 200 GeV top for the L3+1 detector. The Higgs signal is clearly visi ble above the heavy quark background.

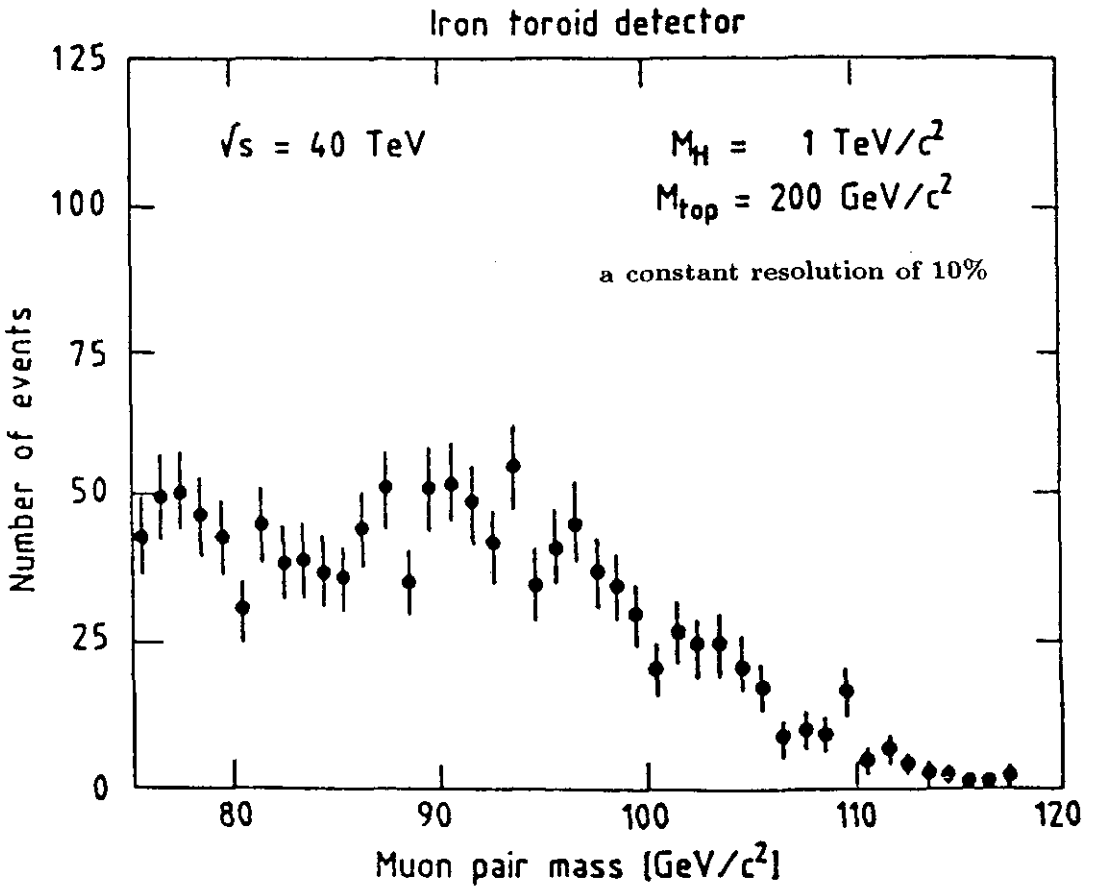

Fig. 1b The reconstructed invariant masses distributions of the dimuons from reactions (1) and (2), same as in Fig. 1a, but with an iron toroid.

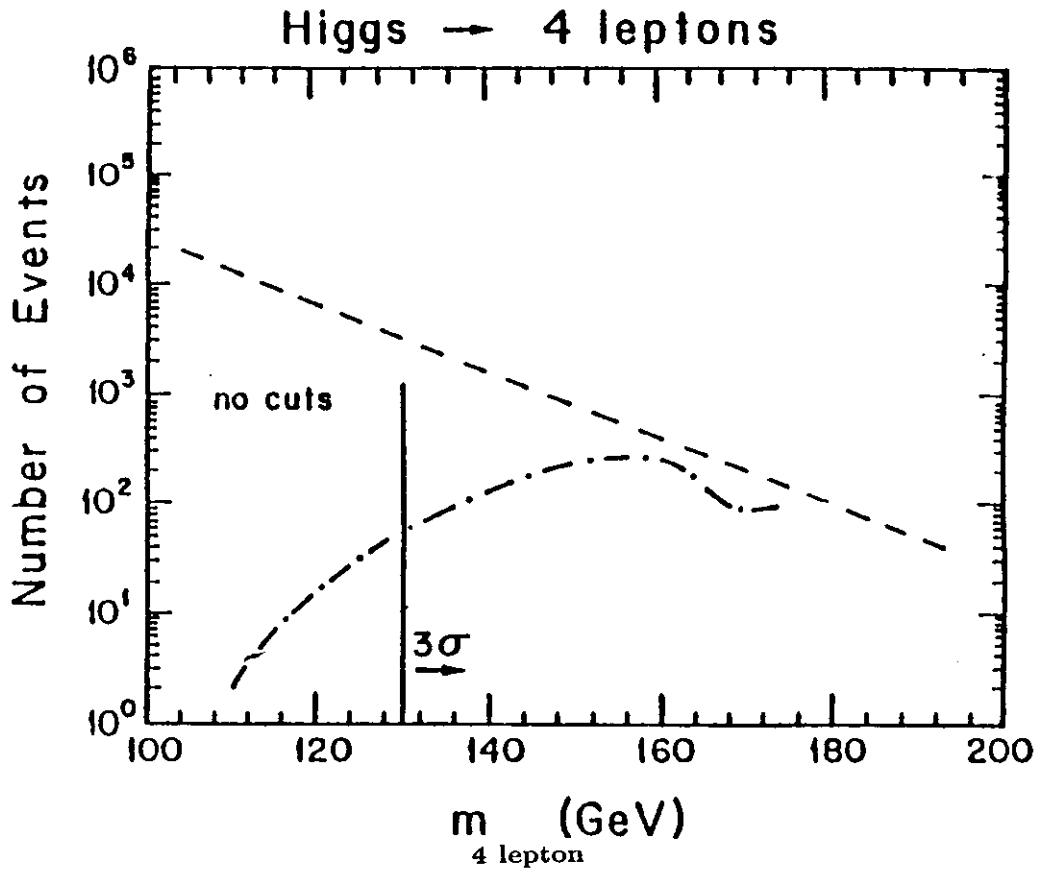

Fig. 2 Expected number of events for Higgs → 4 leptons as function of the mass of the Higgs with an integrated luminosity of 10^4 pb^{-1} at $\sqrt{s} = 40$ TeV. The dashed-dot curve is from Higgs for m_t=90 GeV. the dashed curve is the background from QCD. The momentum resolution of each lepton is assumed to be 0.5% which yields a Higgs mass resolution of 0.2%.

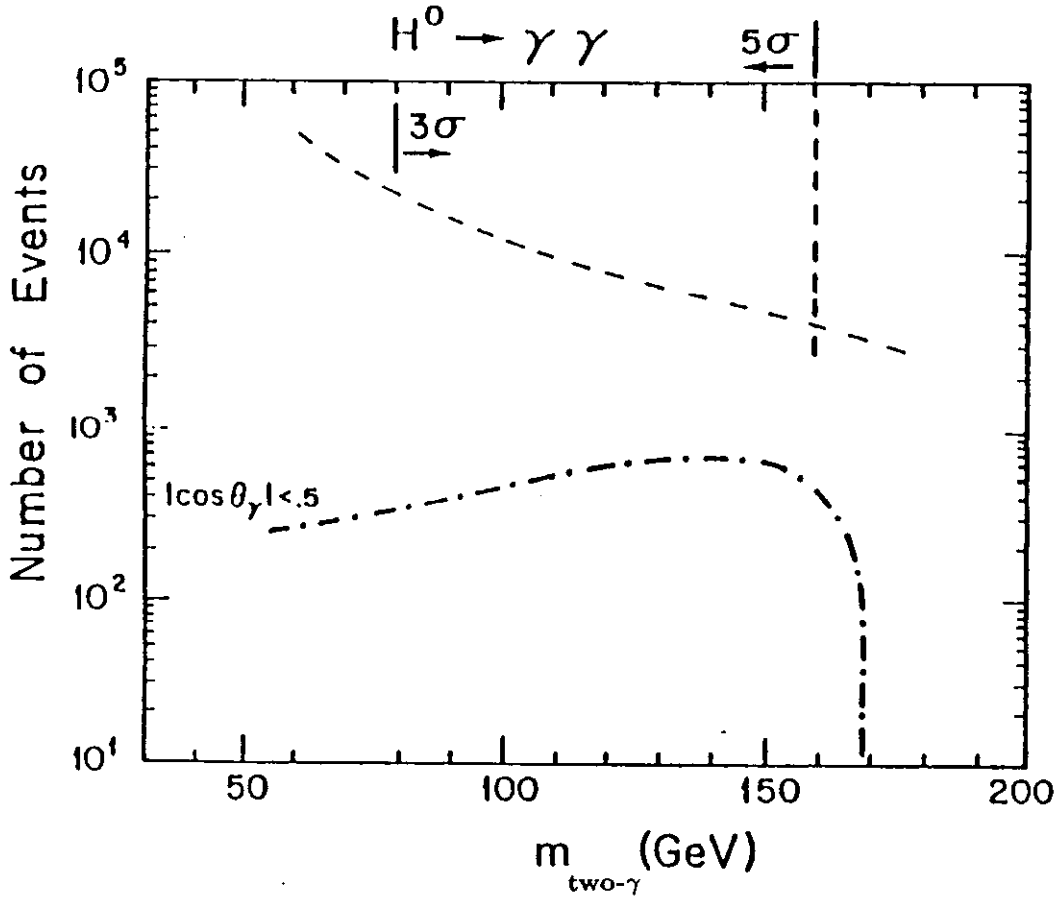

Fig.3 Expected number of events for Higgs $\rightarrow \gamma\gamma$ as function of the mass of the Higgs with an integrated luminosity of 10^4 pb^{-1} at $\sqrt{s} = 40$ TeV. The dashed-dot curve is from Higgs for m_t=90 GeV [3]; the dashed curve is the background from QCD The momentum resolution of each lepton is assumed to be 0.5% which yields a Higgs mass resolution of 0.3%.

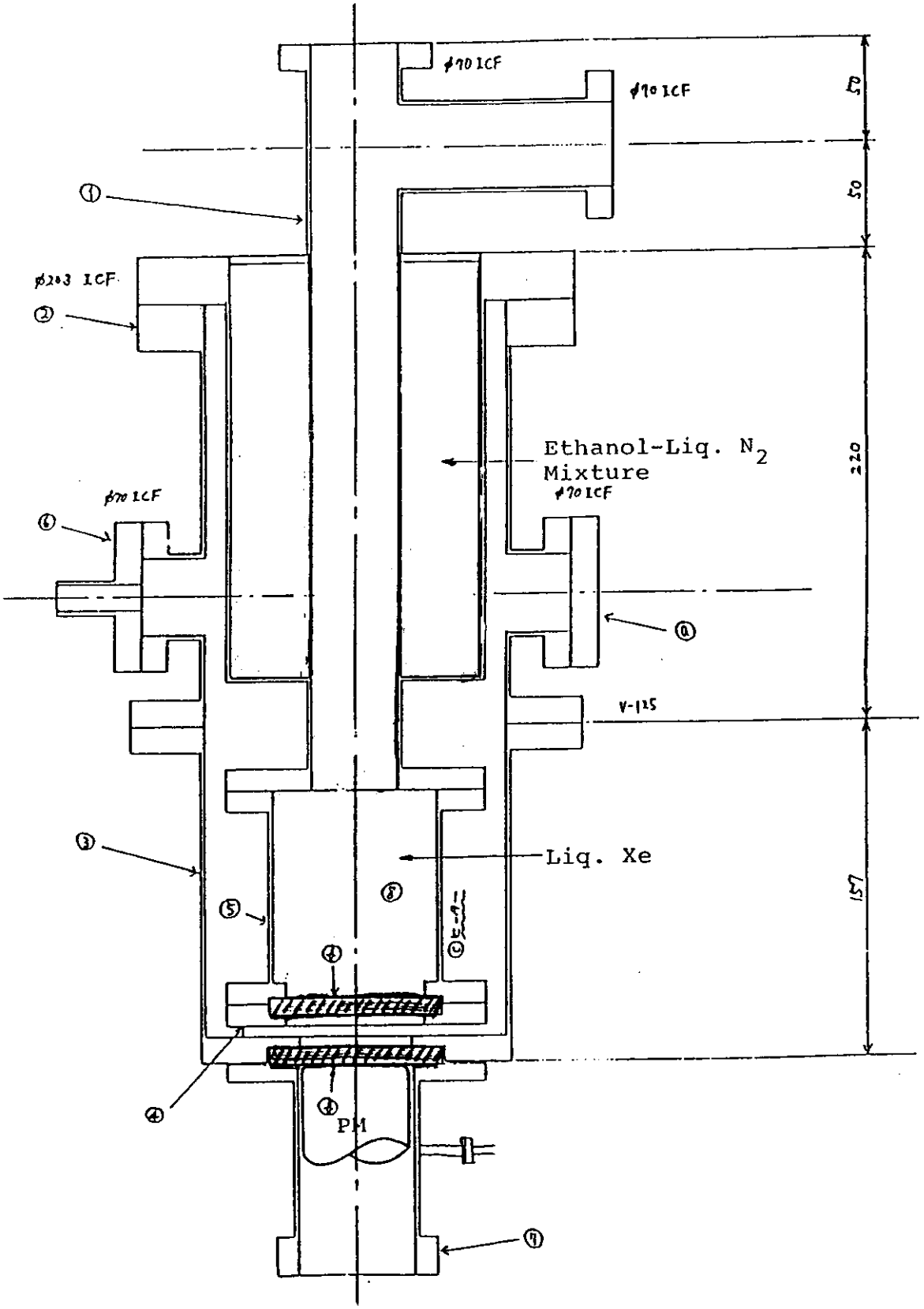

Fig. 4 Scintillating liquid xenon detector built by Doke et al. [20] to measure the reflectivity and light collection efficiency for 170 UV light from xenon. All dimensions are in mm.

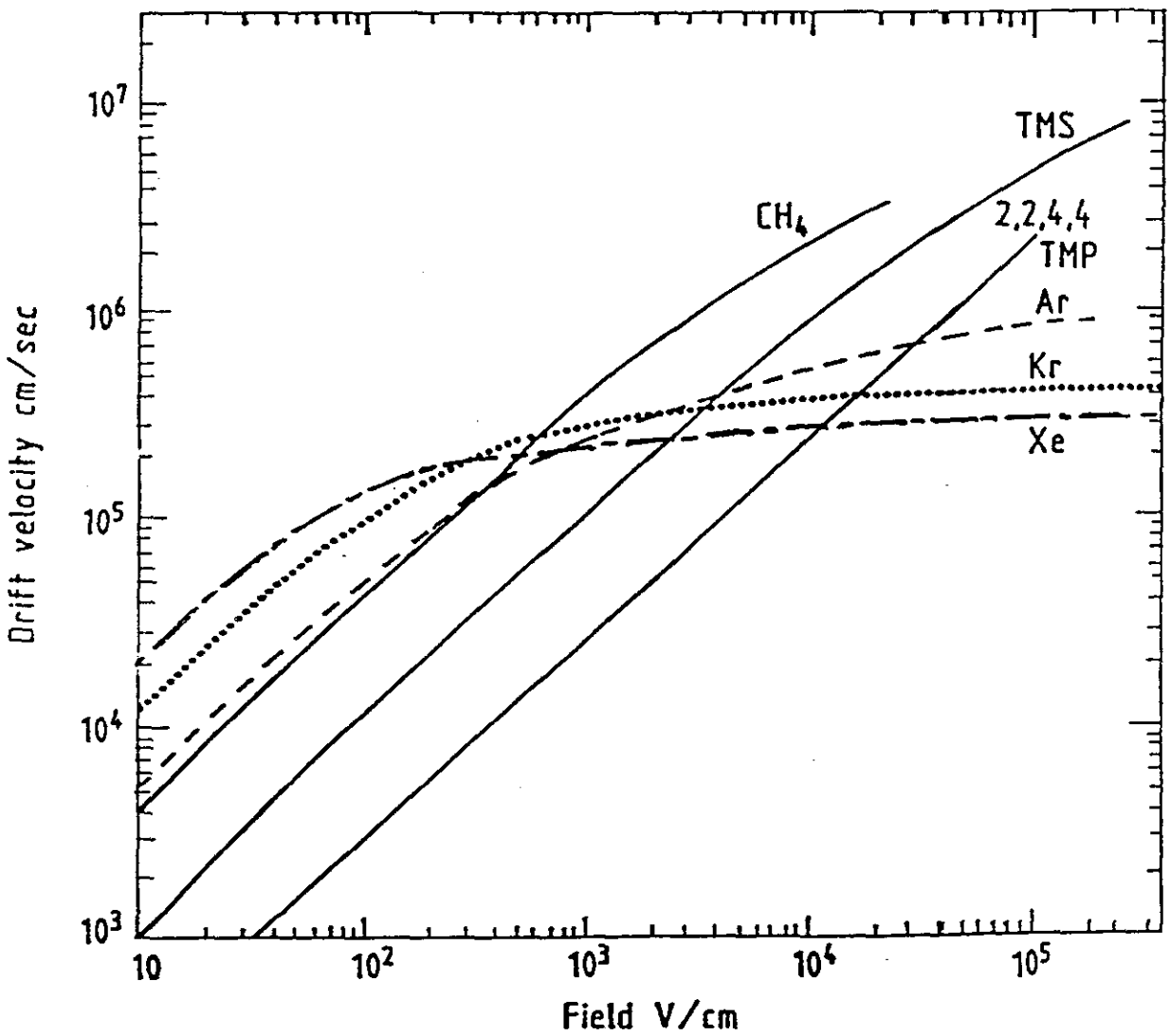

Fig. 5

Dependence of electron drift velocity in liquid noble gases and liquid hydrocarbons on the electric field .

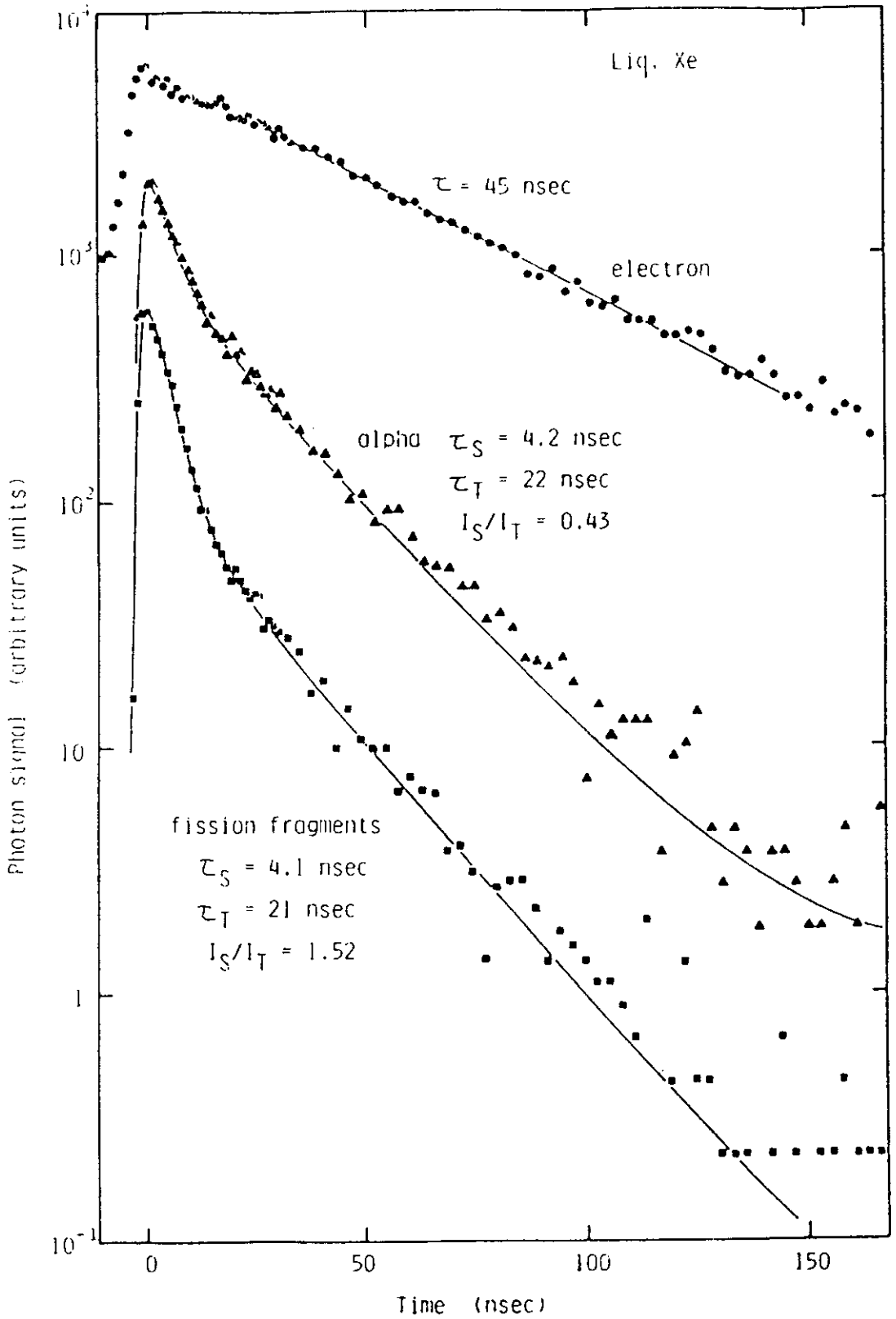

Fig. 6a Decay curves obtained for the luminescence from liquid xenon excited by electrons (●), α particles (▲), and fission fragments (■).

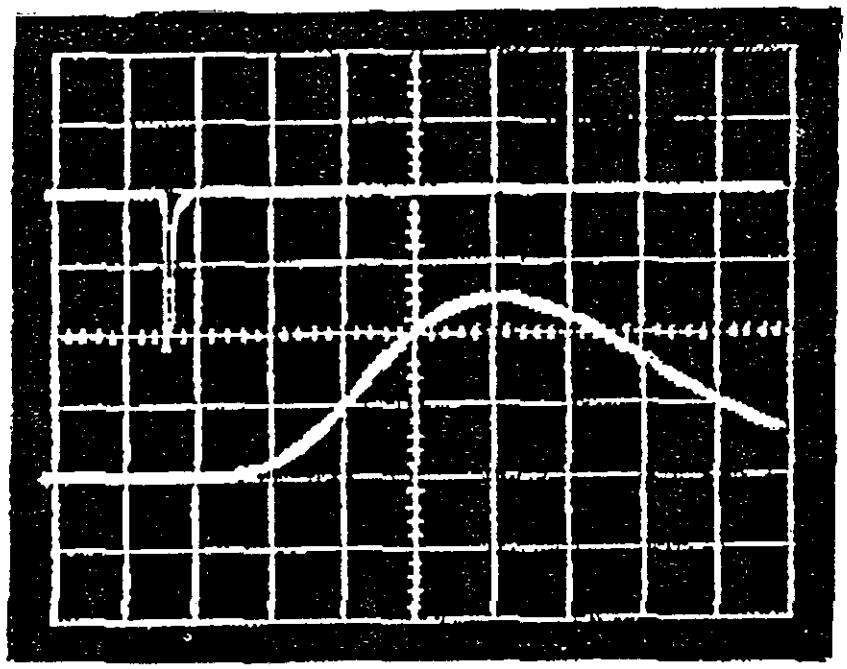

Fig. 6b The scintillating (fast) and ionization (slow) signals (500 mV/div. vertically and $2\mu s$/div. horizontally) from stopping ^{241}Am α particles in a liquid xenon chamber made by E. Aprile et al.[22] The timing difference between the two signals yields a spatial resolution of $< 30\mu$[20].

Linearity of Liquid Argon Detector Scintillation versus Ionization

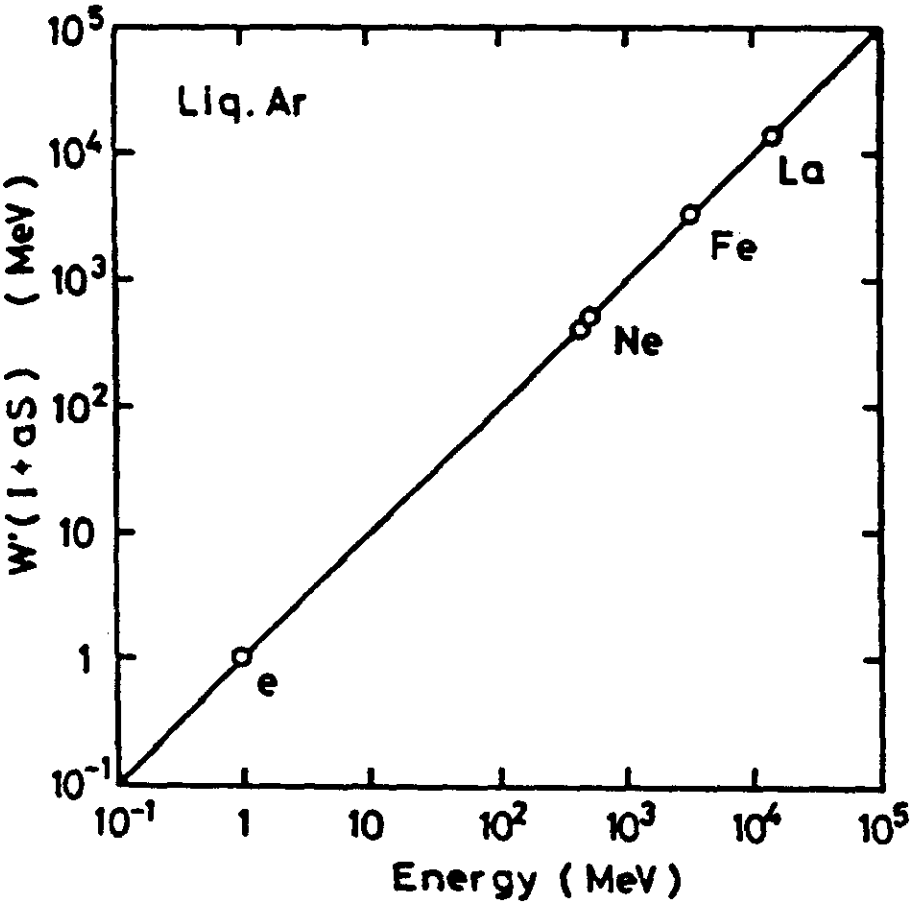

Fig. 7a Relation between the energy absorbed in liquid argon and the amplitude of the sum signal of scintillation and charge in unit of energy.

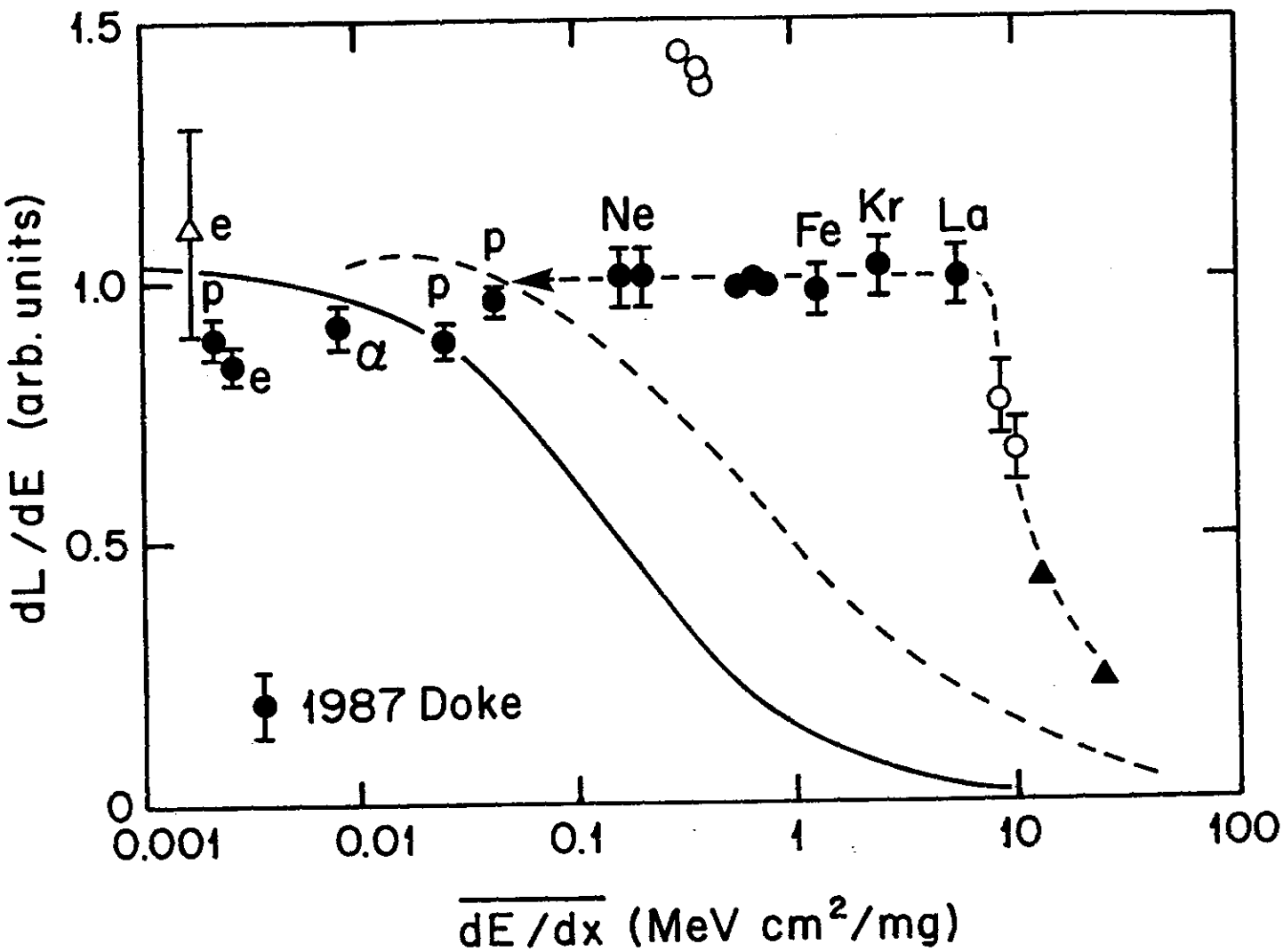

Fig. 7b The measured ratio of light output over energy loss, dL/dE, versus the mean energy loss for LAr (data points) in comparison with that for NaI (dashed) and plastic scintillator (solid) from Ref.20. LXe or LAr saturates at two order of magnitude higher energy loss than NaI.

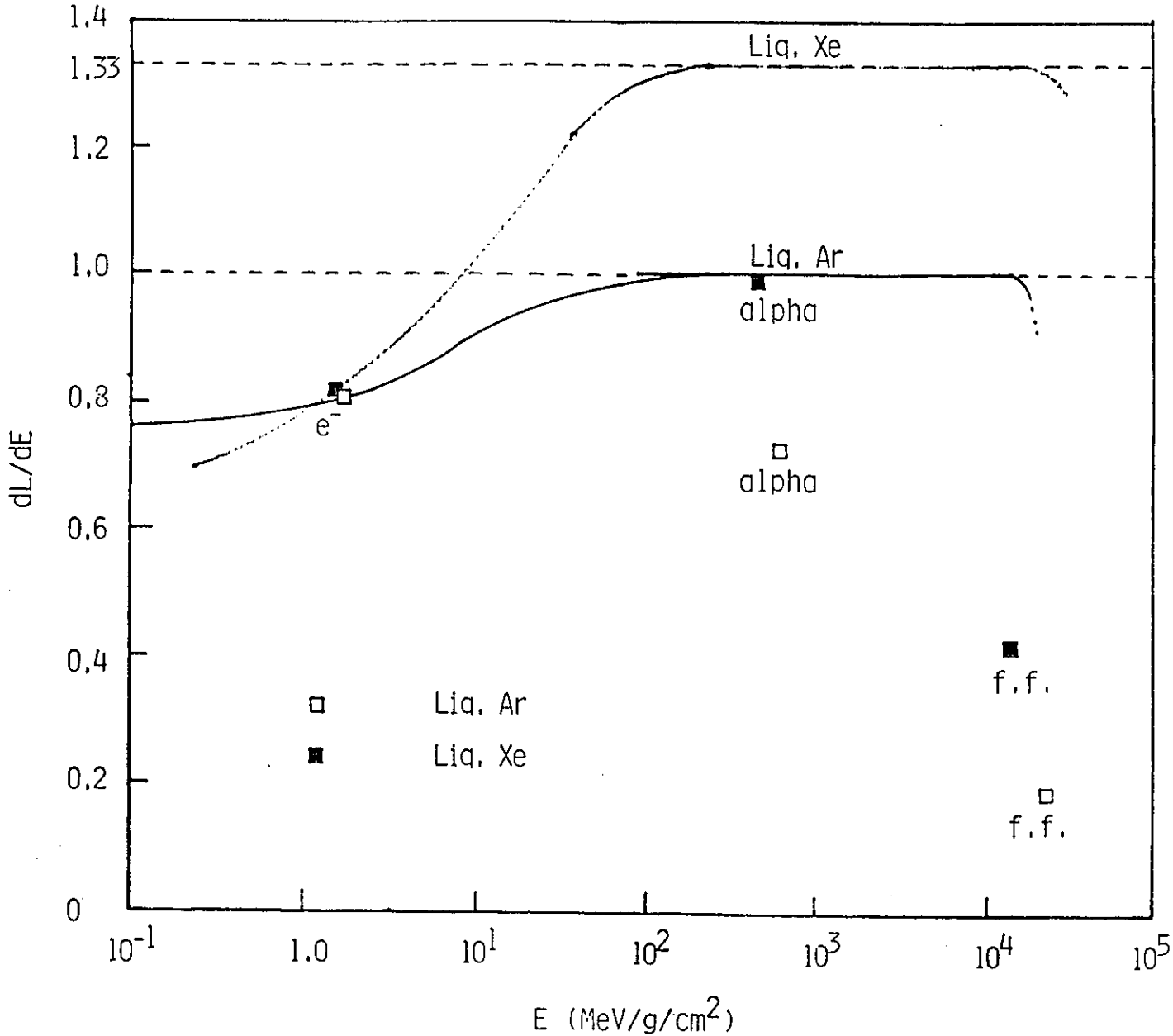

Fig. 7c dL/dE, versus the mean energy loss for LXe. LXe or LAr saturates at two order of magnitude higher energy loss than NaI.

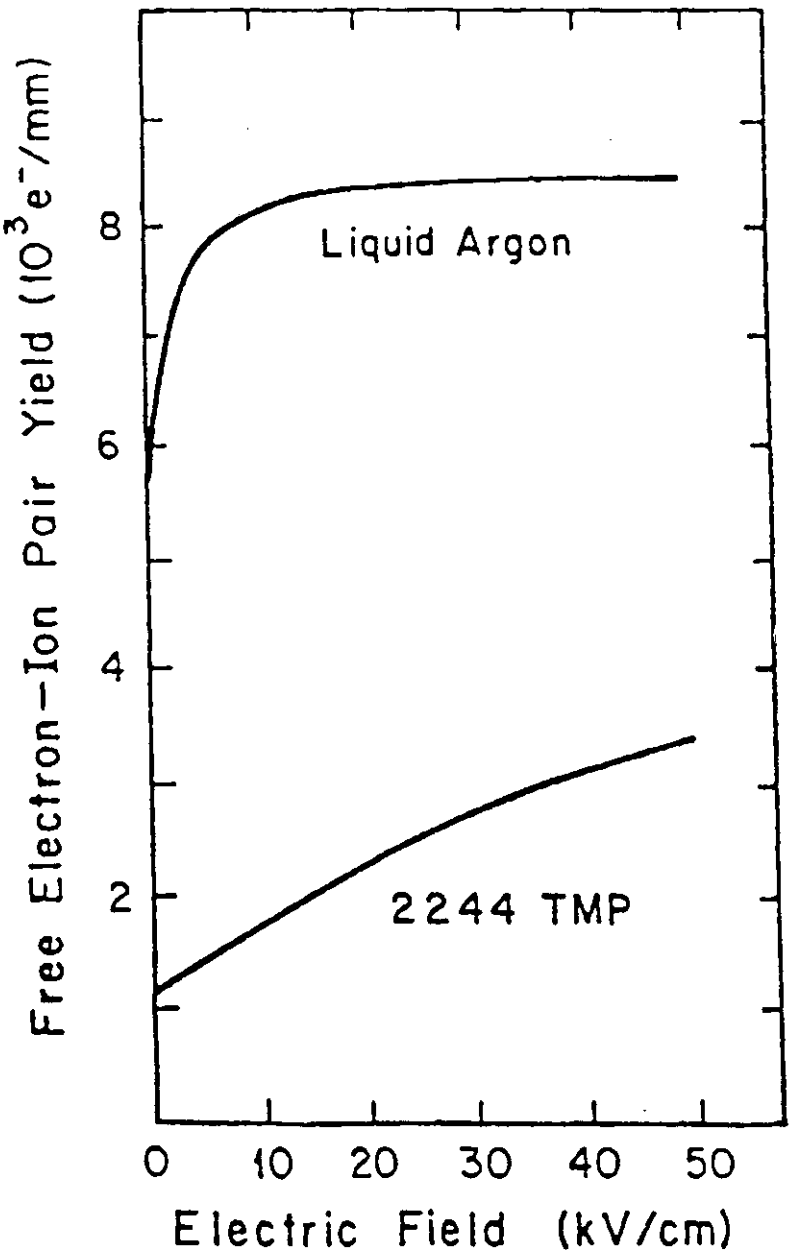

Fig. 8 The free electron yields produced by a minimun ionization particle in liquid argon and TMP as a function of the applied electric field. TMS is about same as TMP while liquid xenon is about 2.5 times larger than liquid argon.

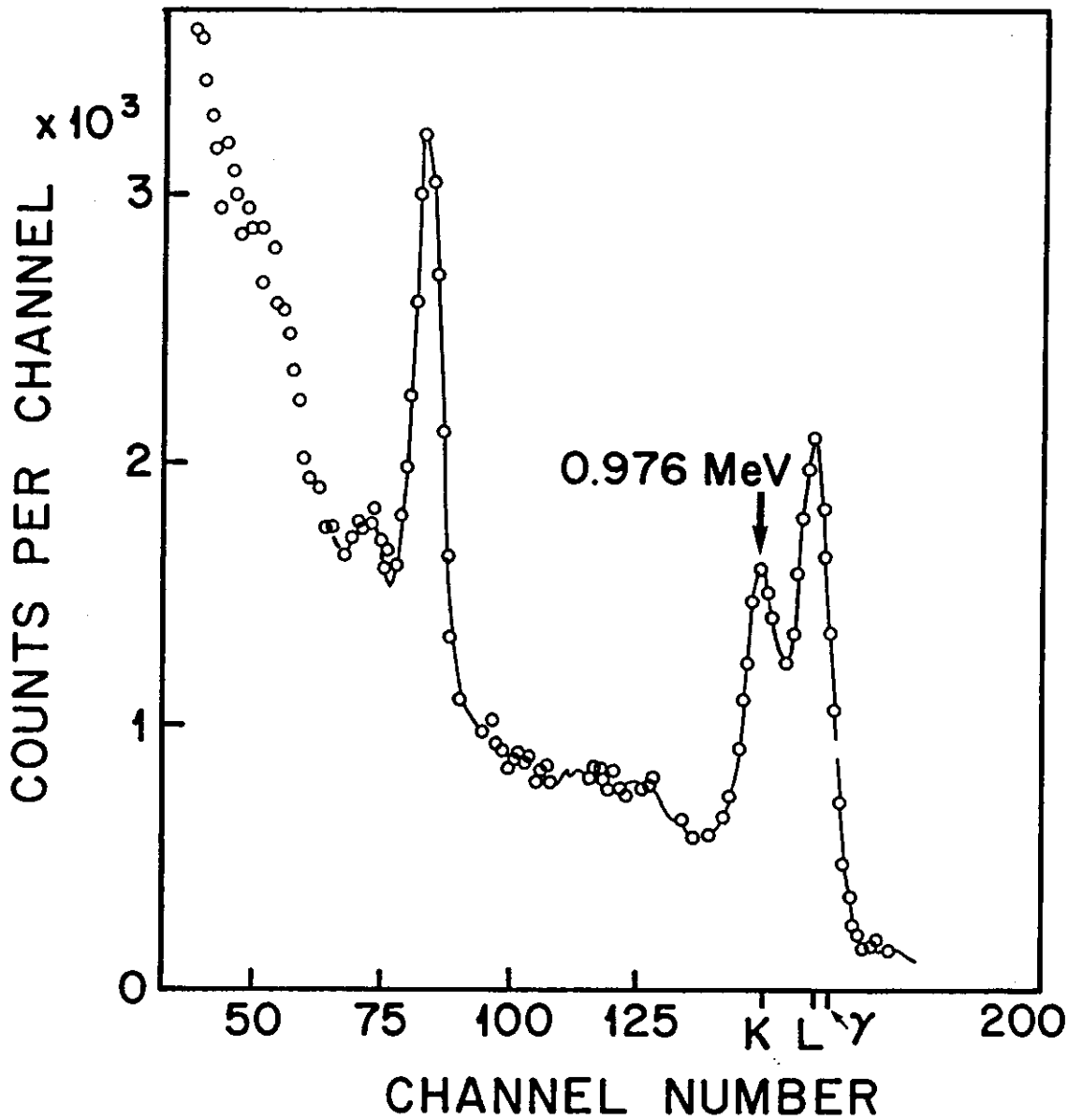

Fig. 9 A typical measured spectrum of ^{207}Bi obtained by a LXe gridded chamber by E. Aprile et al. from ref.22.

EM shower counter: Xe
Hadron: Ar or TMS...

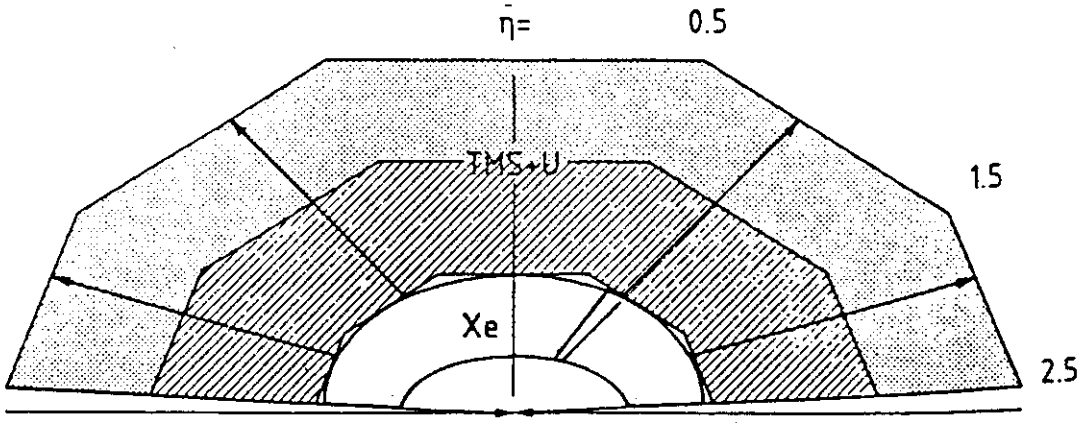

The schematic drawing of the proposed Xenon Ball Detector, showing the cell arrangement of the xenon electro-magnetic shower counter.

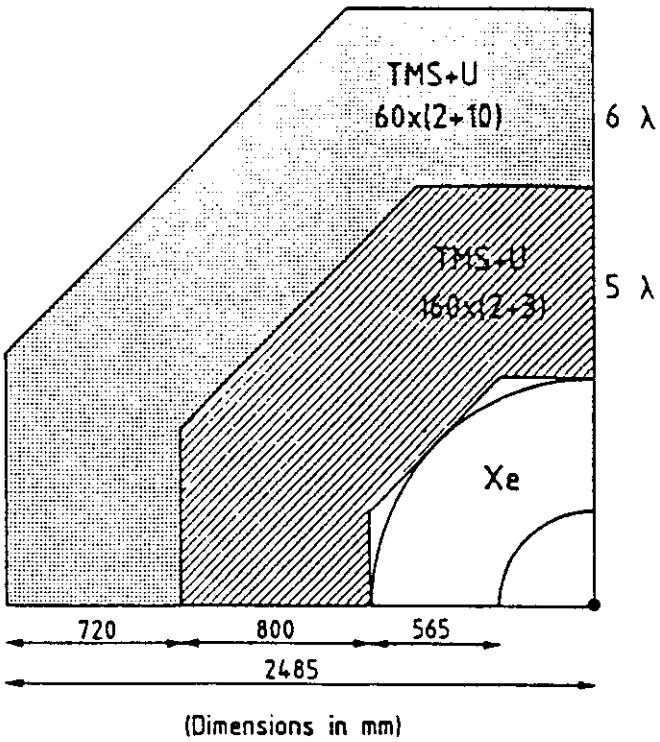

Fig. 10a The R-ϕ projection of the schematic drawing of the proposed Xenon Olive Detector, showing the elctro-magnetic and hadron calorimeter counters.

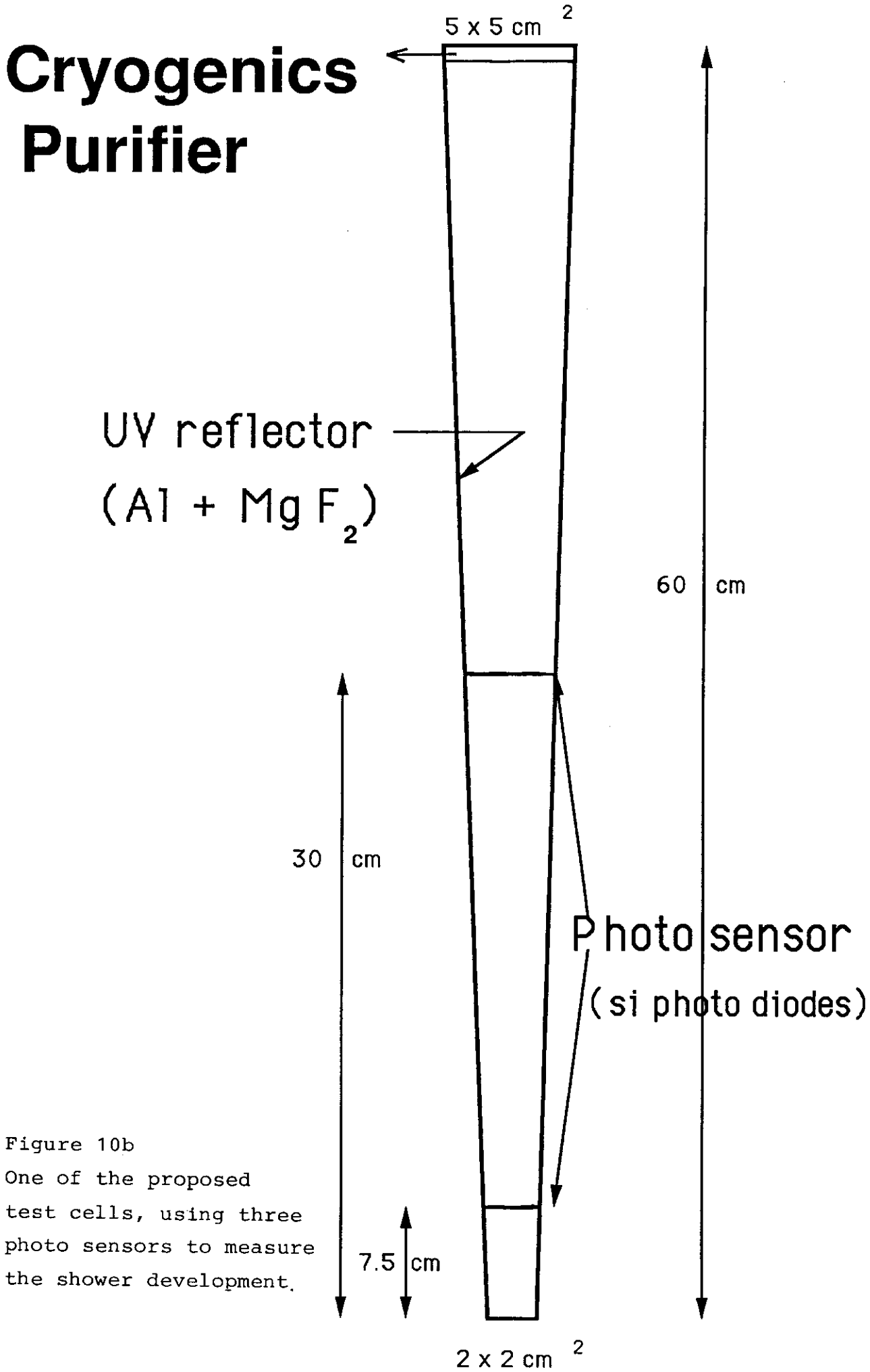

Figure 10b
One of the proposed test cells, using three photo sensors to measure the shower development.

Cryogenics

Purifier

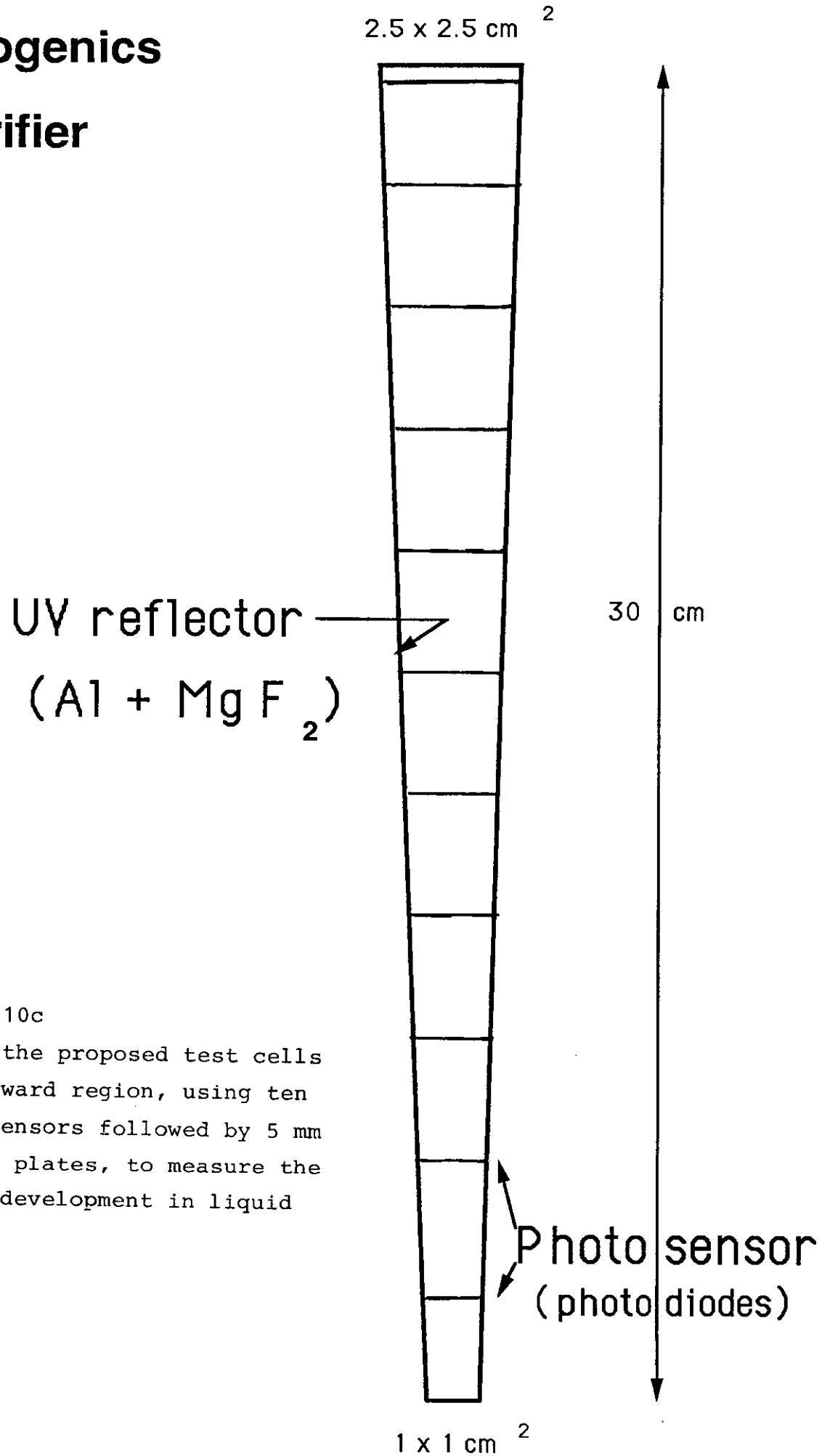

Figure 10c
One of the proposed test cells for forward region, using ten photo sensors followed by 5 mm of lead plates, to measure the shower development in liquid xenon.

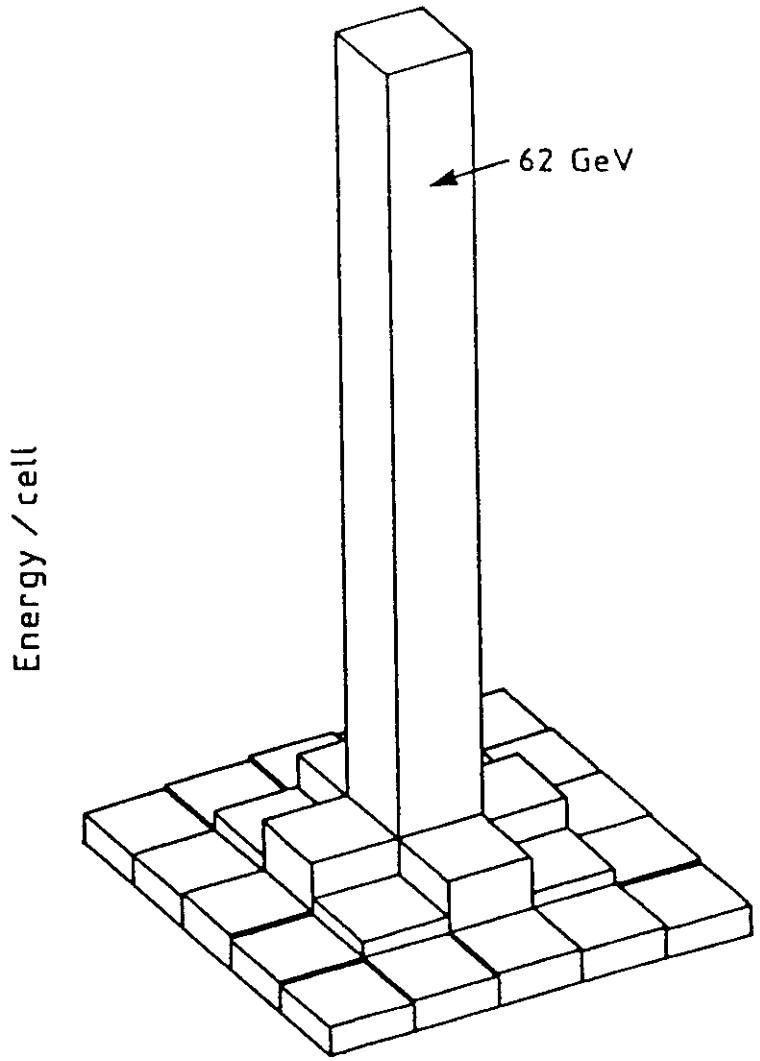

Fig.11 The energy distribution in the xenon detector for a hundred GeV electrons as simulated by the Geant3 Monte Carlo program. Typically more than 62% of the energy concentrates in one or two cells.

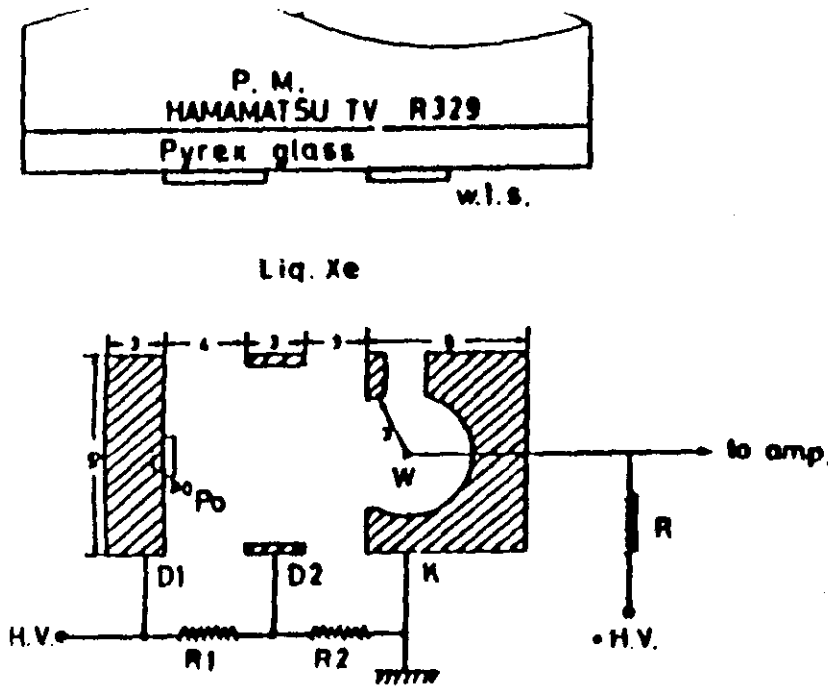

Fig. 12a Schematic cross-section of a small single wire liquid Xenon drift chamber.

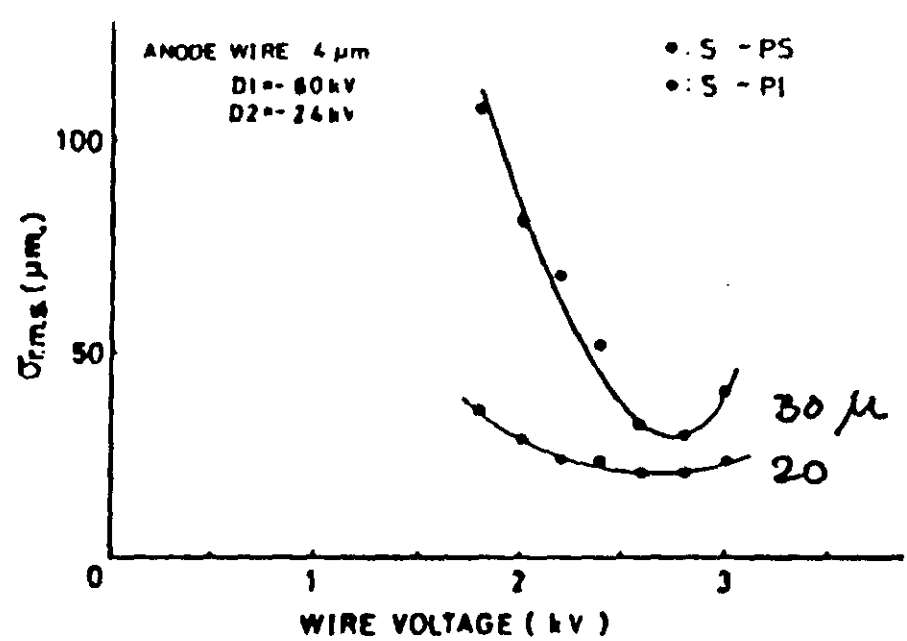

Fig. 12b Spatial resolution (r.m.s.) versus anode voltage by Doke et al.

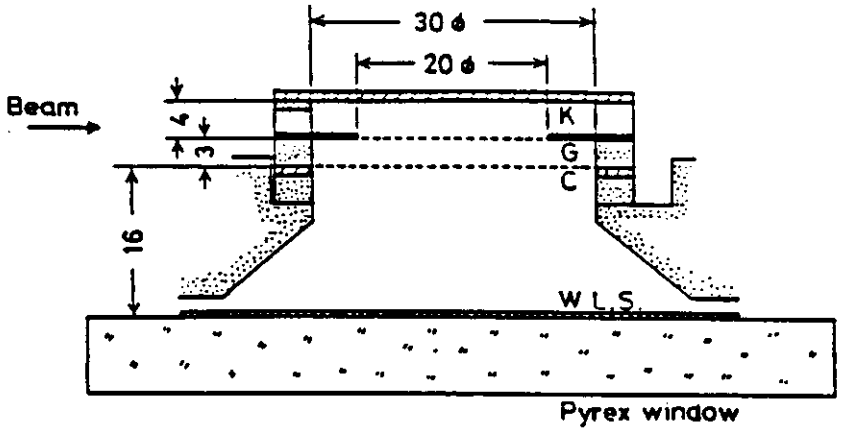

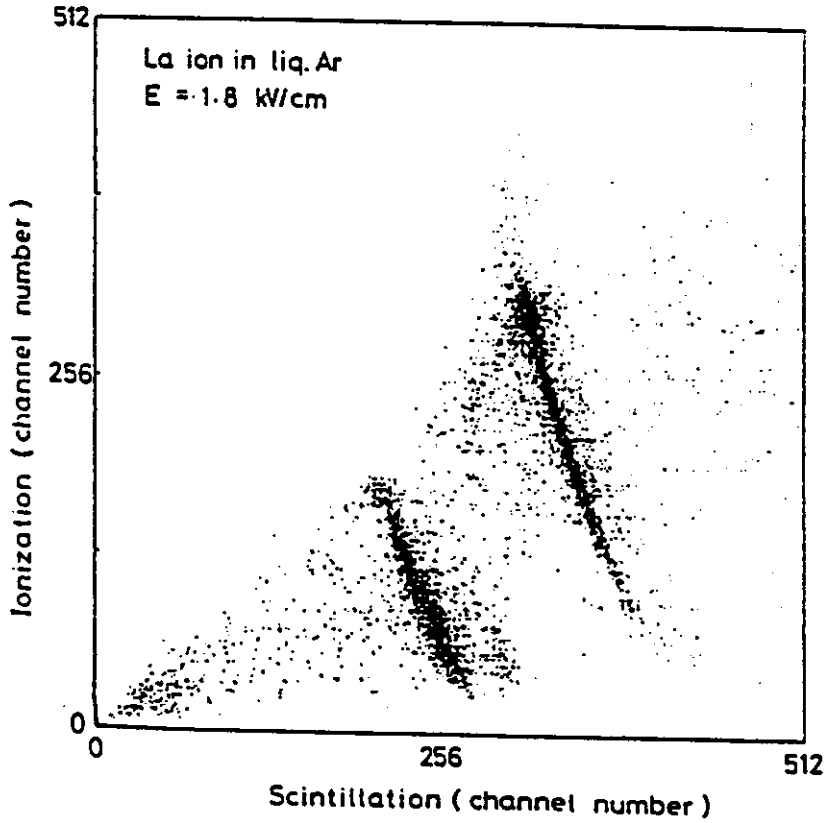

Fig. 13 Correlation between scintillator signal and ionization signal.

Si photo-diode

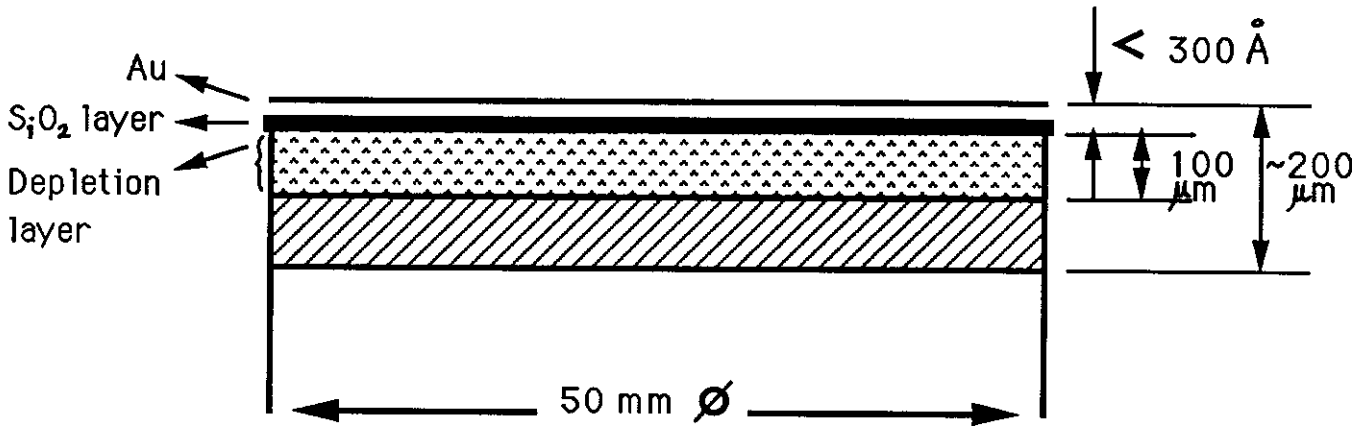

Fig. 14

Schematic Layout of the Silicone Photo-Diode developed by us for liquid xenon detector. It has a shaping time of 10 ns and a quantum efficiency of 70 %. The thin window (30 nm) now is transparent to the UV-light from LXe and it will be further reduced to 15 nm thick.

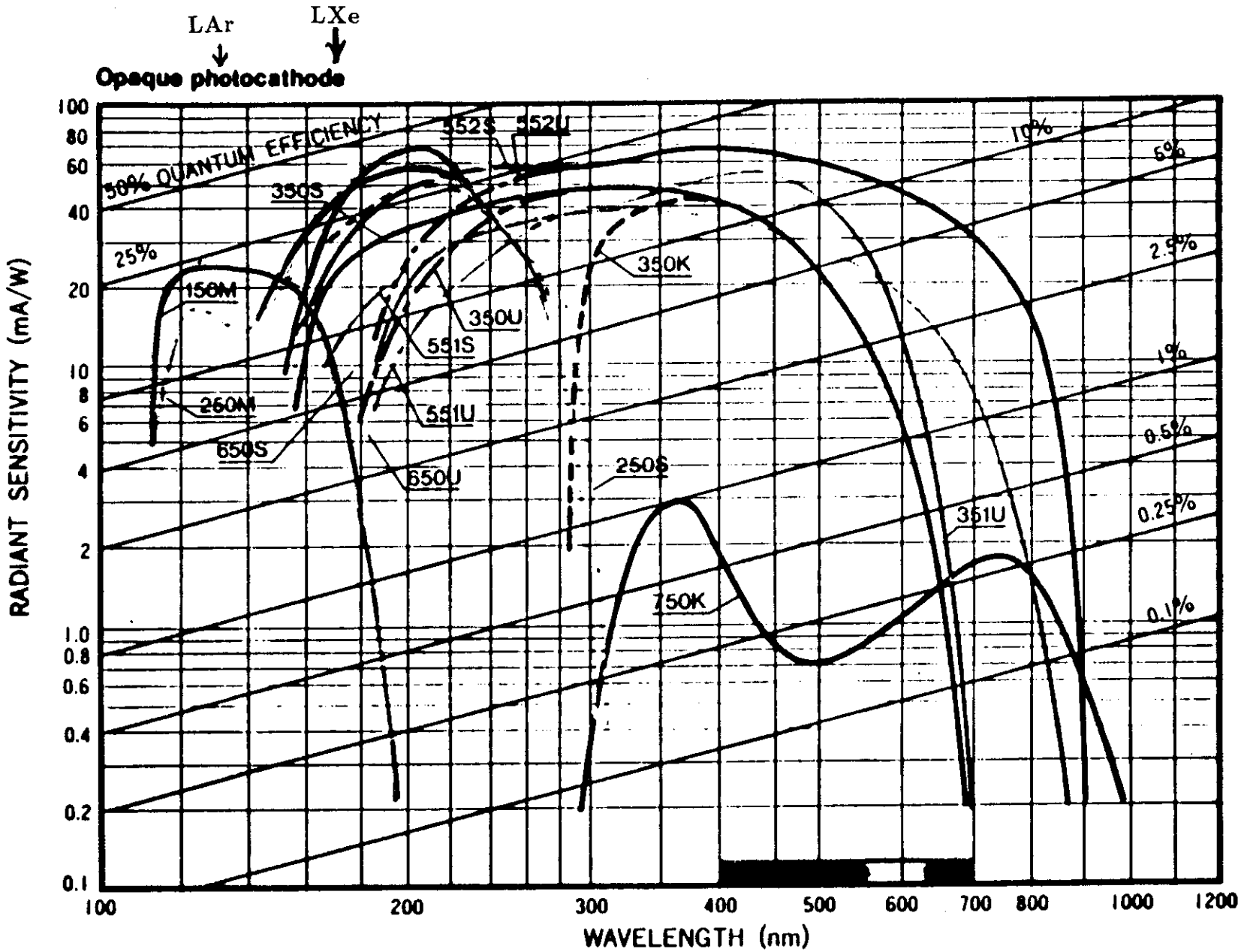

Fig. 15 The quantum efficiencies of some of the presently available photo tubes from Hamamatsu versus wavelength. A quantum efficiency of 25 to 35 % is achieved for LAr (130nm) and LXe (170nm).

From CRC Handbook of Chemistry and Physics(66th ed. 1985-86)

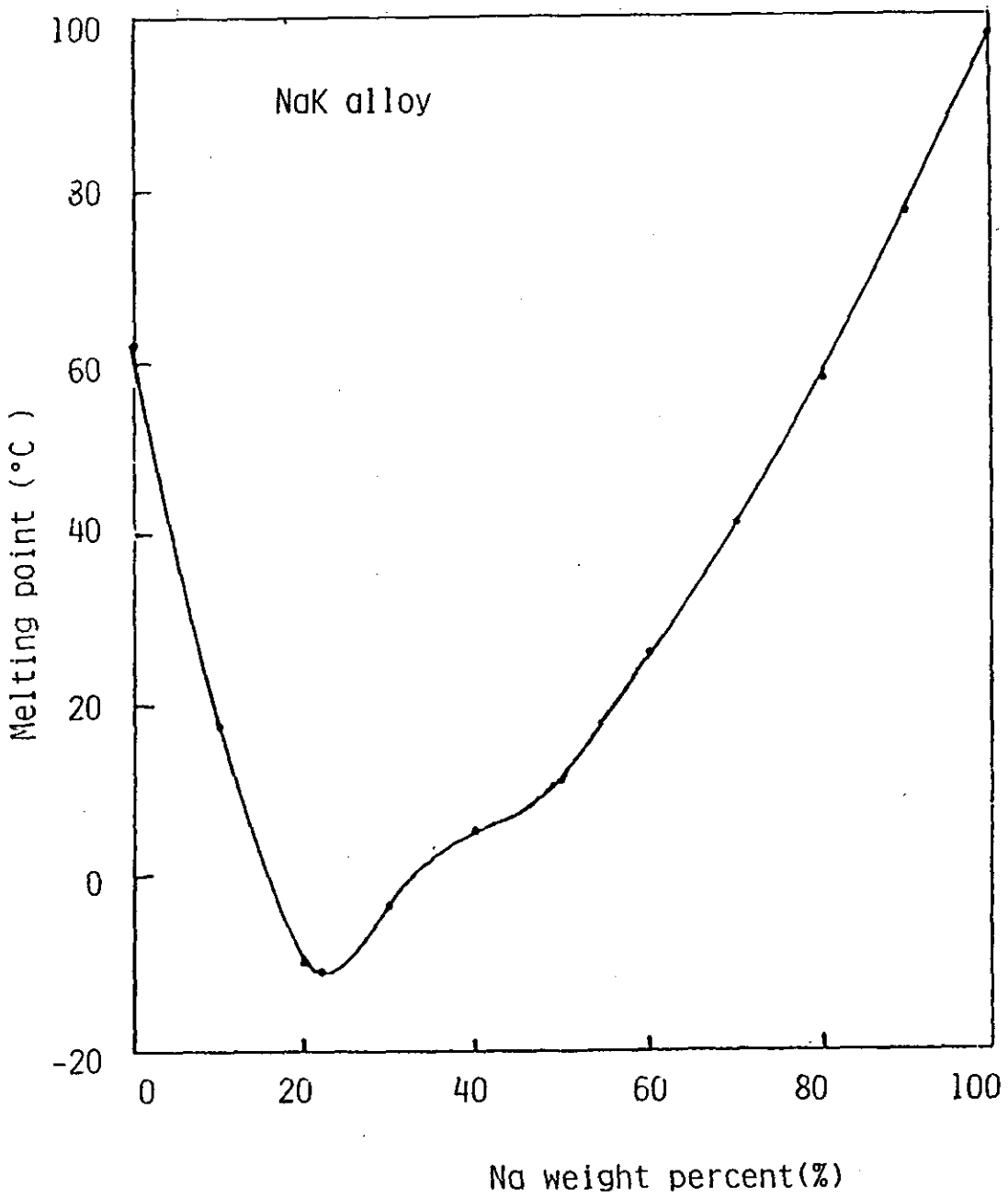

Fig. 16 The phase transition property of NaK alloy versus the % Na weight. Top region is for liquid while bottum is for solid NaK alloy. The operating point for LXe is chosen to be near the minimum, i.e. Na = 21%.

Purification system using NaK alloy:

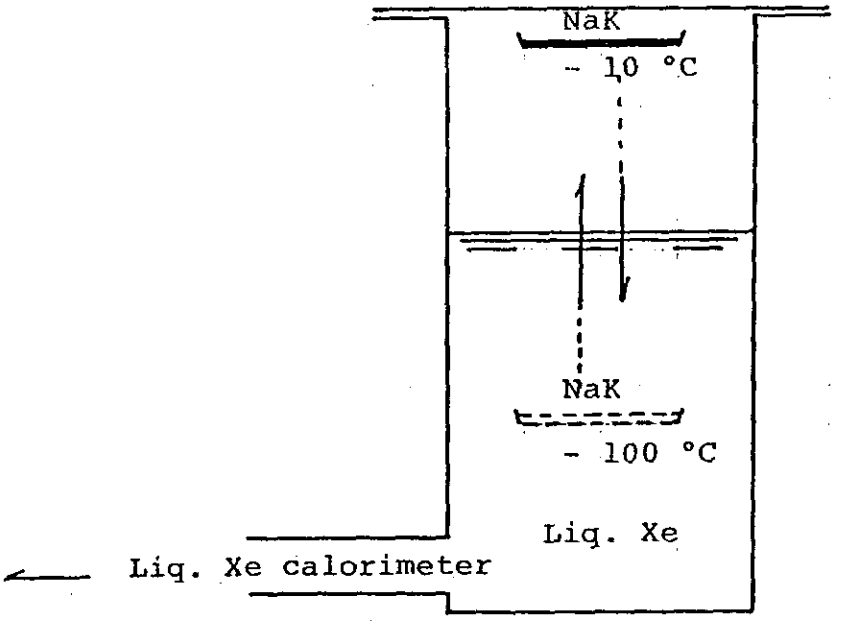

Fig. 17 A high performance (a few ppb of impurity) purification system for LXe detectors. NaK is very active when dropped as liquid into LXe, where it turns into solid and absorbs impurities. Solid NaK are then removed from the bottum to return to liquid state, stired to obtain fresh surface to be reused again.