26/5/93 H.J.

The GEM Test Beam Program at MWest

Overview

I. Starting in FY1995, carry out a *coordinated* test of the various GEM subsystems:

- Calorimeter (Barrel & End Cap)
- Central Tracker
- Muon Tracker
- Data Acquisition & Access
- Electronics & Trigger Development

II. Continue these tests in FY1997 to include:

- Forward Calorimetry
- Full Scale Muon Chambers
- Final Subsystem Electronics

III. Starting in ~FY1997, carry out an *integrated* test of an 18° sector of the GEM detector.

Slattery
5/28/93

The GEM Test Beam Program at MWest

Goals

I. Optimize the design of the GEM detector components before full scale production begins.

II. Modify existing detector elements when test beam results demonstrate this to be necessary.

III. Understand in detail the technical characteristics of the final GEM detector.

IV. Integrate the various GEM subsystems into a unified detector before the start of SSC operations.

Comments

Goal I can be pursued in FY1995, particularly if the SSC construction schedule is stretched out.

Goal II should involve only relatively minor changes since the Fermilab test beam program is only one aspect of the overall GEM R&D effort.

Goal III will benefit from test beam data right up to, and even after, startup of the SSC experimental program.

Goal IV will be pursued in FY1997 and thereafter, and will be particularly useful in a stretched out SSC schedule.

Slattery
5/28/93

MWest Overview

- Beam:
  - Primary Protons: ~800 GeV/c
  - Secondary Beams: ±10 —> ±600 GeV/c
  - Momentum Tagging: ~0.2 % (2.4 or 4.8 mr)
  - Electron Tagging by Cherenkov & SRD (new)
  - Primarily Low Intensity : ~10 Hz – 10 kHz
  - Limited "Pinged" Beam : ~10^9 Hz for ~1 ms
- Hall:
  - Floor Space: 200×63 ft^2
  - Crane: 25 tons & 30 ft hook height
  - Cryogenics:
    - Storage Tanks: LN_2 & LAr
    - Extensive Cryo-plumbing
    - Complete ODH System (incl. runoff pit)
  - Magnet:
    - Field $\leq$ 1.2 T
    - Aperture: H=50 in; W=36 in; L=60 in
  - Transverse Rails (400 t) across (3 ft deep) Trench
  - Internal & External Counting Areas
- Reusable Equipment:
  - Tracking Chambers (E706 & E672; E704)
  - PREP Electronics
  - Computers

Slattery
5/28/93

MWest Experimental Area
Fermi National Accelerator Laboratory
GEM Test Beam Configuration

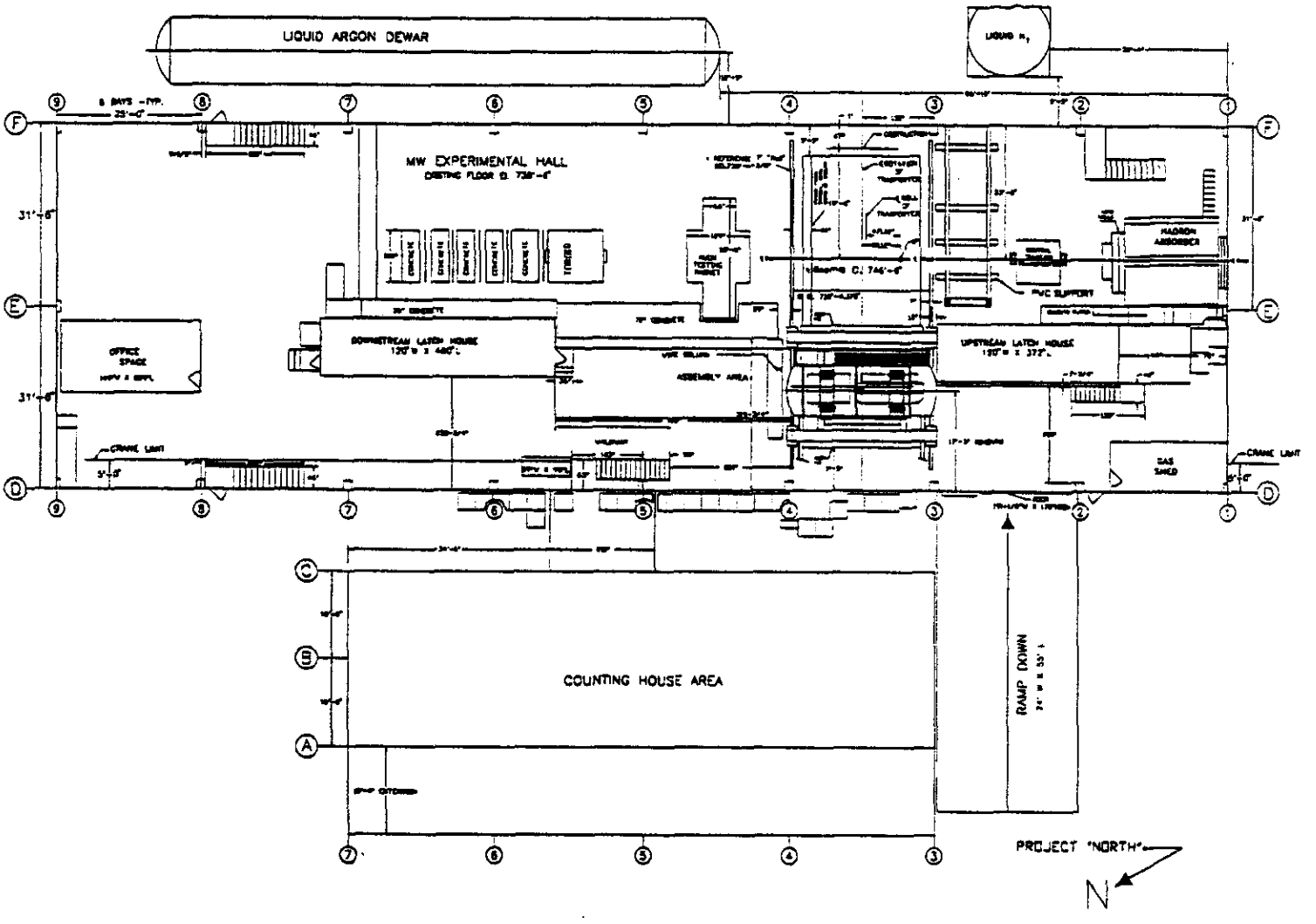

Slattery
5/28/93

Calorimeter Testing and Calibration

- Perform full-scale engineering studies of all calorimeter subsystems: mechanical, electrical and cryogenic.
- Achieve full system integration of the electromagnetic and hadronic cryogenic calorimetry and of the external scintillating calorimetry.
- Carry out a full system test of the calorimeter readout and calibration systems.
- Measure the response of the scintillating calorimeter and determine the reproducibility of its performance from module to module.
- Study the calorimeter's resolution at the highest energies available.
- Investigate the calorimeter's single particle response in the vicinity of representative cracks.
- Study the calorimeter's single particle response across the barrel to end cap transition.
- Investigate the calorimeter's response to muons.
- Investigate the calorimeter's single particle response in the forward direction (relative to the GEM axis).

The results of these studies will be used to pin down the Monte Carlo simulations that provide the critical link between the MWest test calorimetry and the operational GEM calorimeter.

Slattery
5/28/93

Calorimeter Testing Apparatus

- Calorimeter Transporter (Rochester)
  - Horizontal Motion on Existing Rail System
  - Vertical Motion on a "Lowboy" Carriage
  - Rotational Motion: ±90°
  - Tilting Motion: ±4°
- Test Cryostat (SSCL)
  - Double Walled Flanged Aluminum Cylinder
  - Internal Bath Box to Minimize LKr Volume
  - Thin Upstream Window
  - Loaded via Rails Mounted on an Insertion Bridge
- Prototype Modules
  - Barrel Electromagnetic (BNL)
    - 2 full length modules
  - Barrel Hadronic (Rochester)
    - 7 –> 14 Inner Had & Outer Had modules
  - End Cap Electromagnetic (Columbia/BNL)
    - truncated EM prototypes
  - End Cap Hadronic (Washington)
    - full size Outer Had A & Outer Had B
    - truncated Inner Had A & Inner Had B
  - Scintillating Barrel (Boston/Oak Ridge)
    - 1 –> 2 full size (half length) modules

Slattery
5/28/93

The GEM Calorimeter

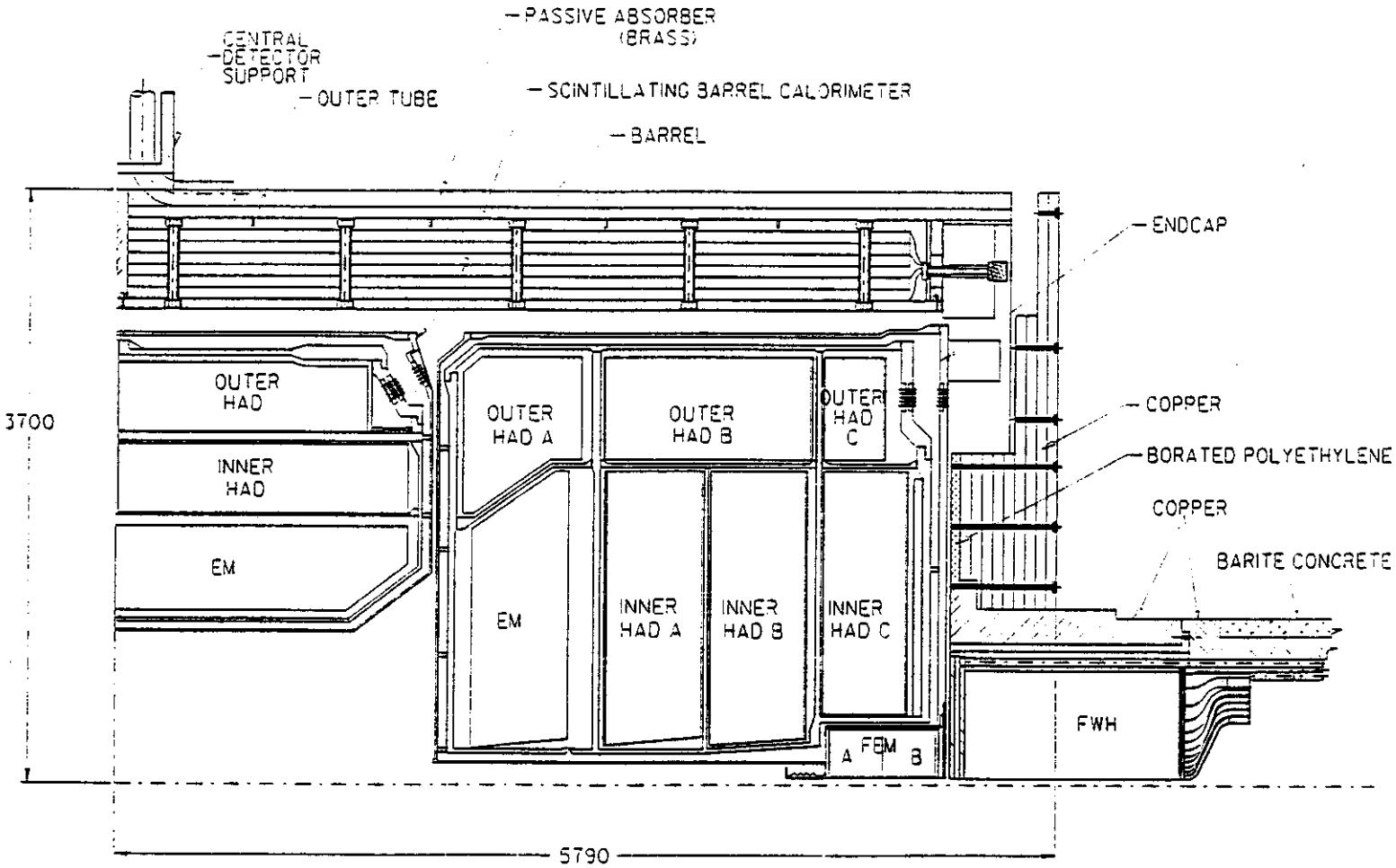

Slattery
5/28/93

Calorimeter Testing

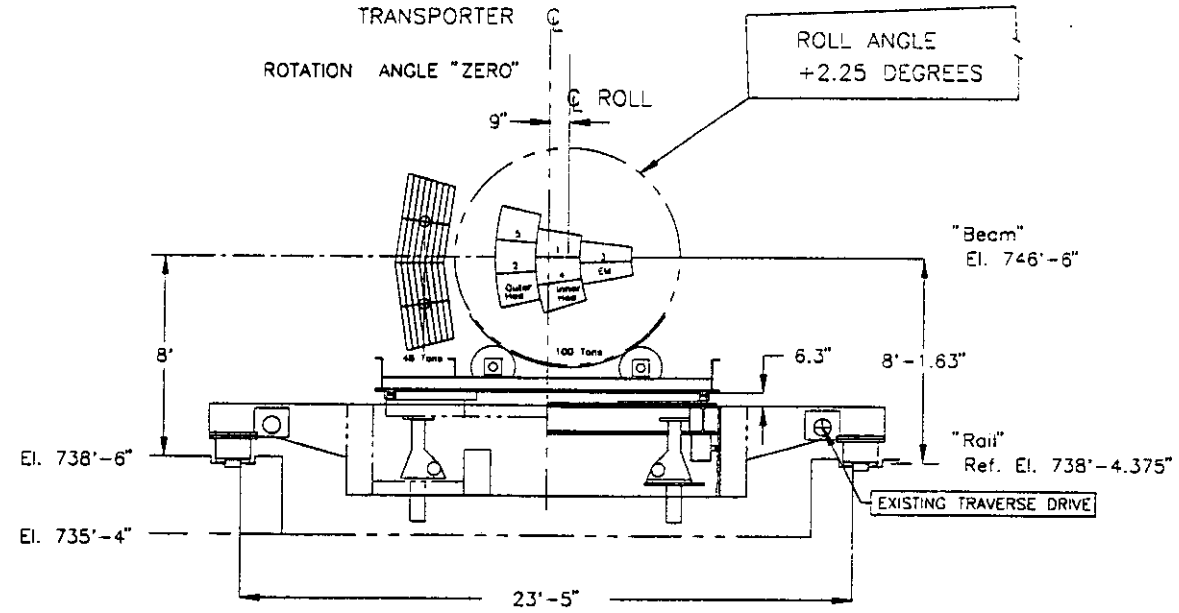

Beam Centered on Crack in First Hadronic Layer

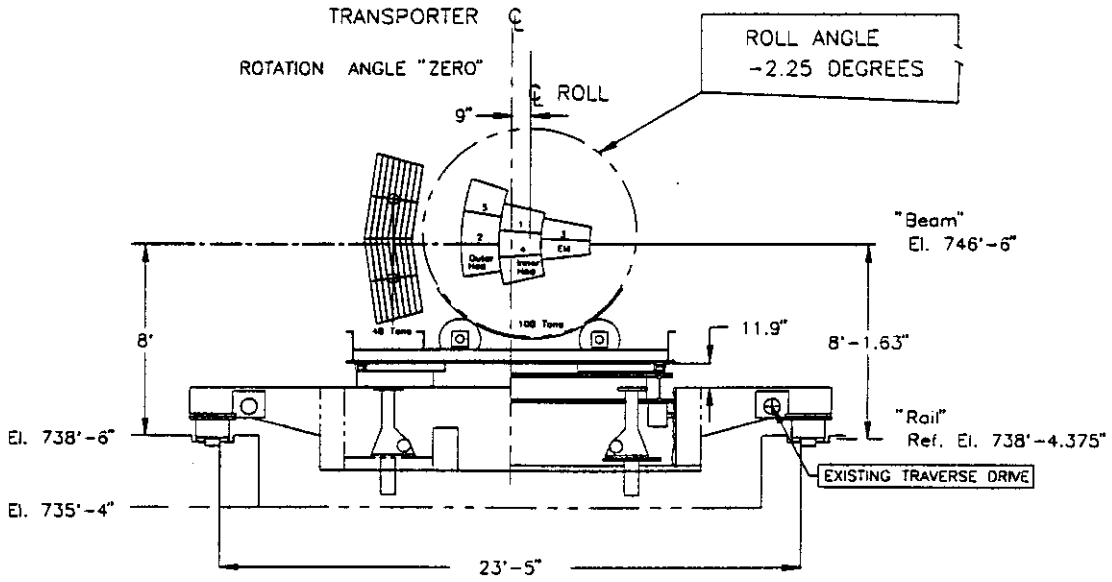

Beam Centered on Crack in Second Hadronic Layer

Slattery
5/28/93

Calorimeter Testing

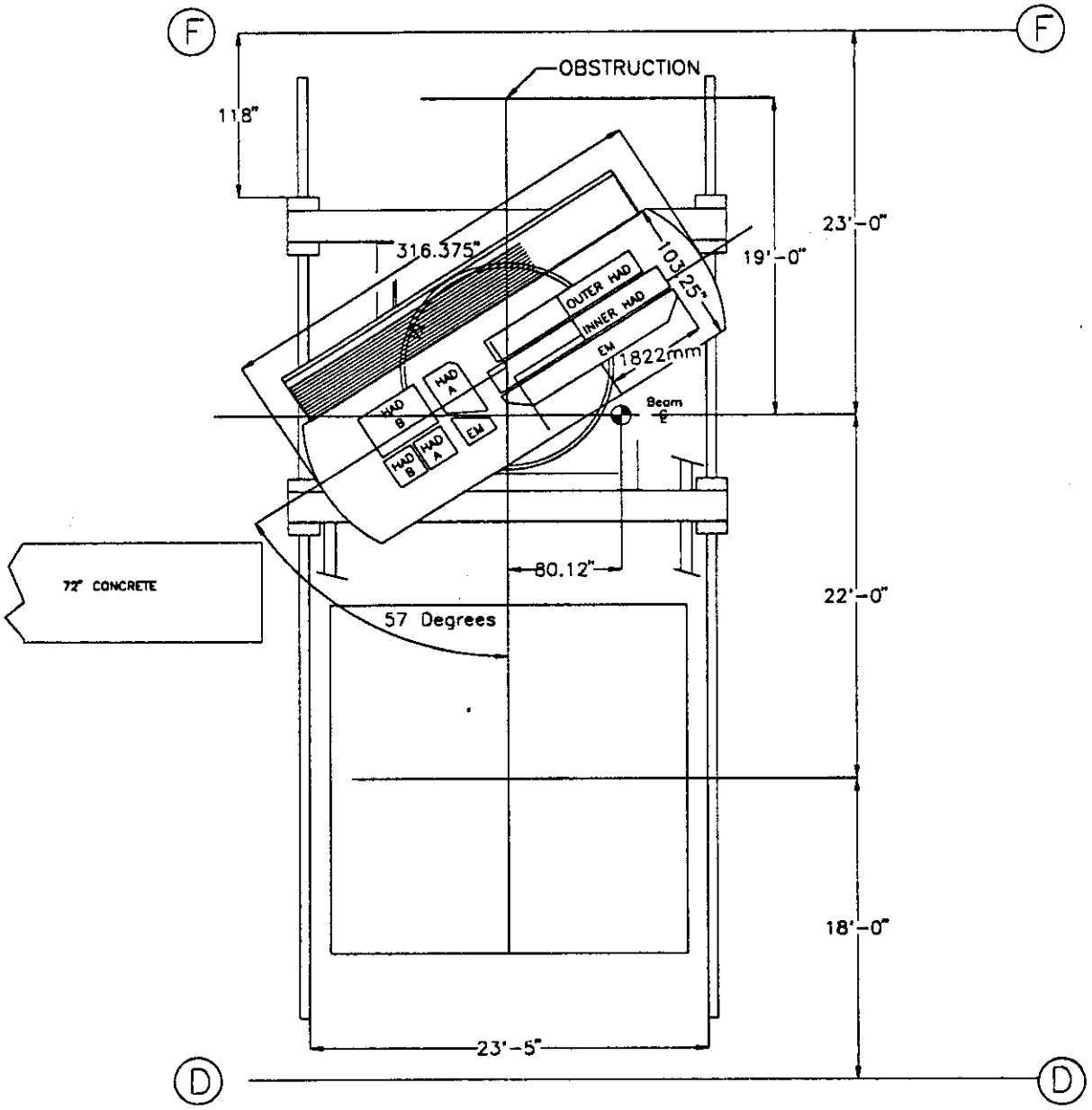

Investigation of Barrel to End Cap Transition

Slattery
5/28/93

Central Tracker Studies
Interpolating Pad Chambers

- In FY1995, conduct follow-on studies to those carried out at BNL in 1993 & 1994:
  - Investigate rate capability of full-size barrel and endcap IPC's using final design electronics. Carry out full scale system tests of gas, cooling, and mechanical support systems.
  - Continue IPC resolution and efficiency studies begun at BNL, incorporating new ideas and improved electronics.
  - Investigate IPC performance in a 0.8 T magnetic field.
- In ~FY1997, check out and align complete central tracker if SSCL test beams are not available.

Central Tracker Testing

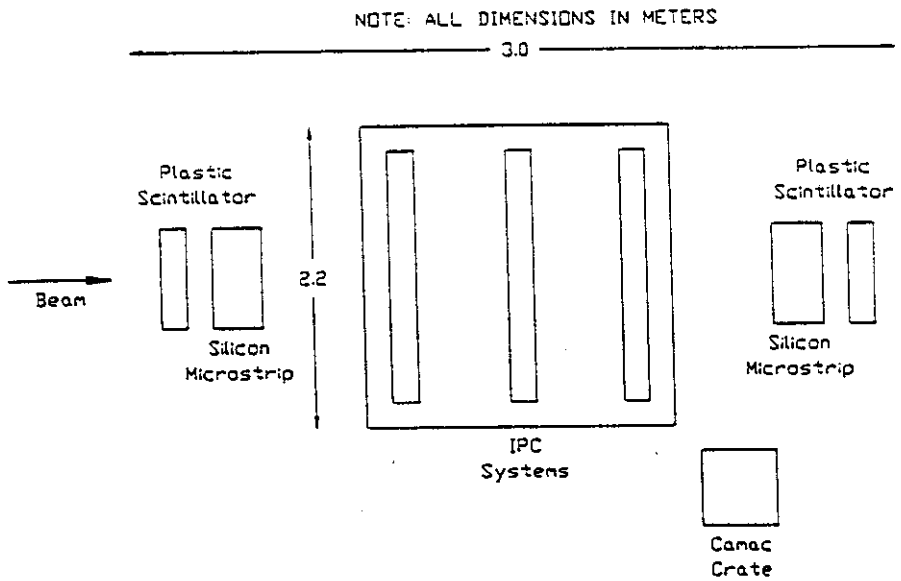

Top View of IPC Test Beam Setup

Proposed Layout for FY1995

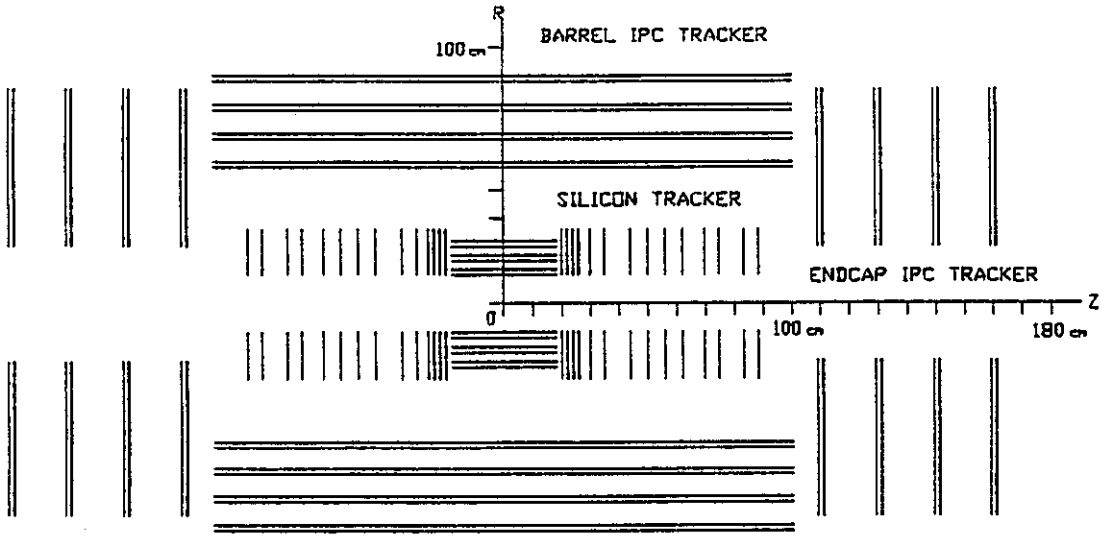

GEM CENTRAL TRACKER

Possible System Checkout in ~FY1997

Slattery
5/28/93

Muon Tracker Studies
Cathode Strip Chambers

- In 1995, carry out studies complementary to those conducted at the TTR, and to bench tests using sources and UV-lasers:
  - Test several small (30x30 cm^2) CSC prototypes in a 0.8 T magnetic field.
    - Simulate muons by π^- at ~200 GeV/c
    - Study Lorentz angle effects
    - Investigate two-track resolution
  - Simulate GEM calorimetry by installing passive absorber directly upstream (and penetrating into) the MWest analysis magnet.
    - Study hadron punch-thru (50 – 800 GeV/c)
    - Investigate muon radiation at high energies
- In ~1997, test large chambers (1.25x4.0 m^2). Use high energy tracks to verify the precision of a full-scale, dynamically alignable (via software) sector fixture.

Slattery
5/28/93

Muon Tracker Testing

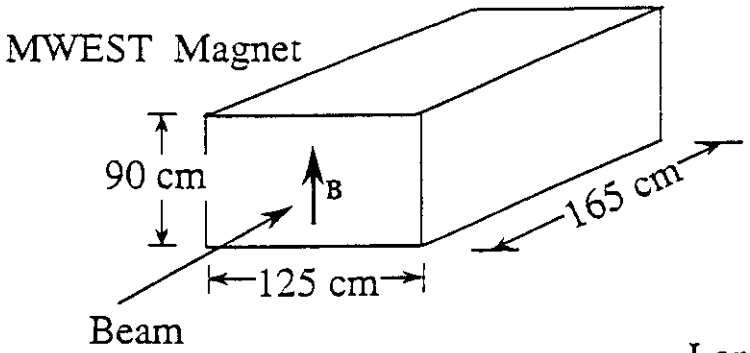

Six-Plane Chamber

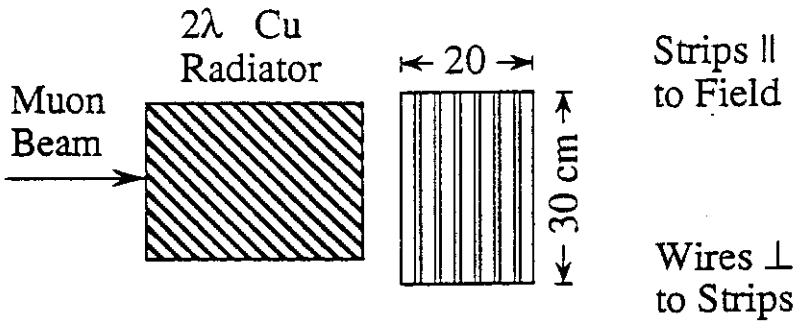

Lorentz Angle and Resolution Studies

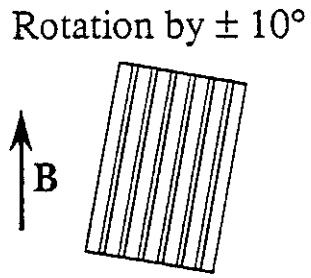

Resolution Studies from 0 to 50° Polar Angle

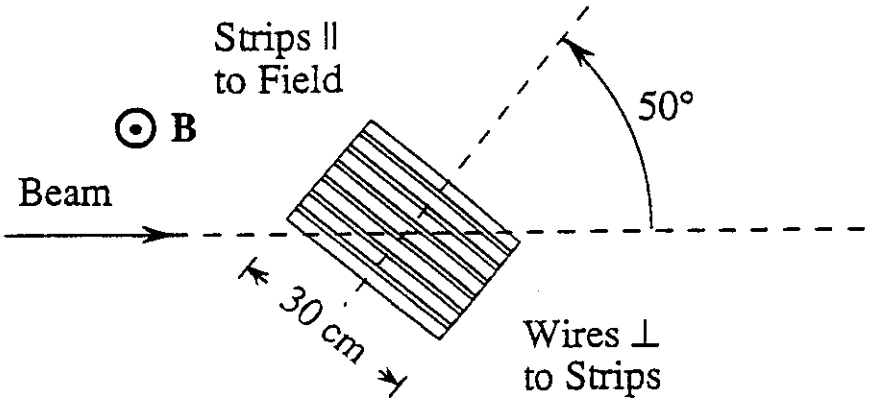

Prototype Testing in FY1995

Slattery
5/28/93

Muon Tracker Testing

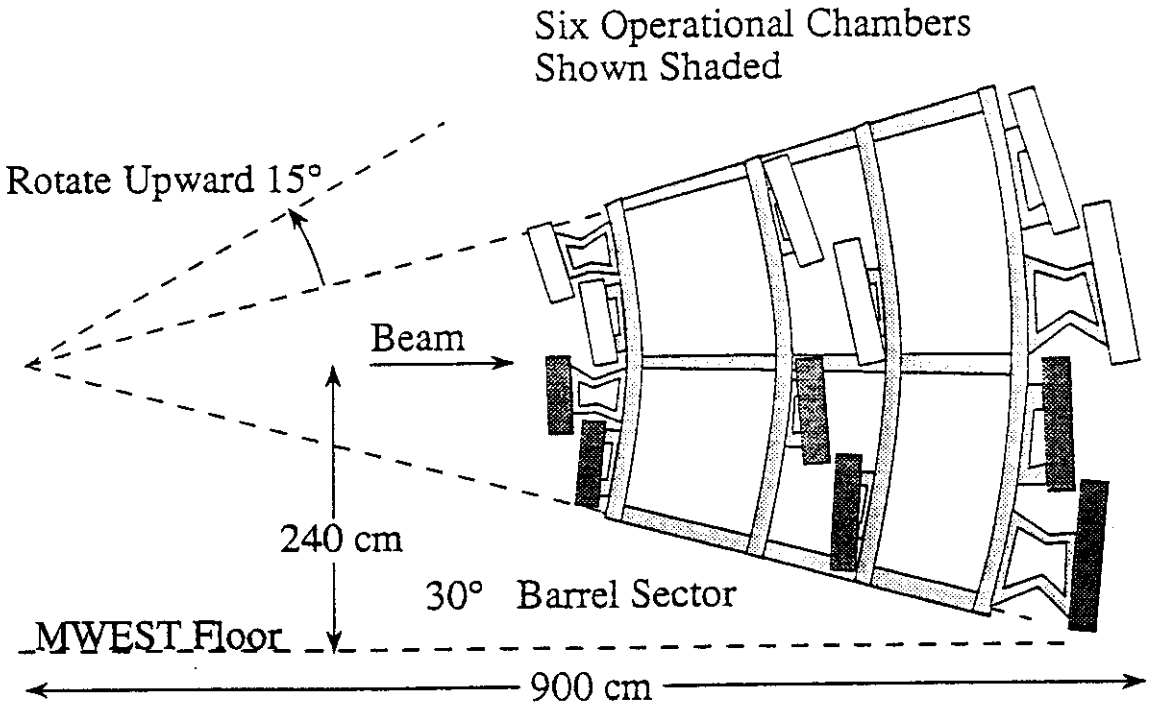

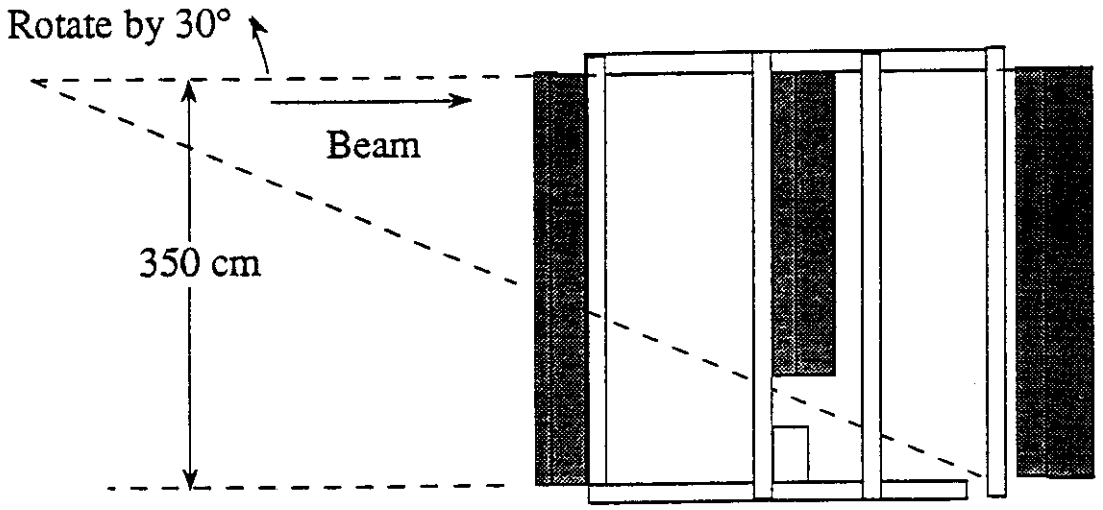

Possible Sector Test in ~FY1997

Slattery
5/28/93

SUMMARY

- The Fermilab test beam program builds upon and complements earlier and contemporaneous GEM R&D activities.
- The program is an ambitious undertaking comparable in scale to a major fixed target experiment. It is to be managed by a team of physicists with many years of experience carrying out a comparably sized effort (E706/E672) in the same Fermilab area (MWest).
- The focus of the MWest program is not only to optimize the design and performance of the GEM detector, but also to provide directly relevant operational experience to GEM physicists during the protracted SSC construction schedule.
- Depending on cost and schedule considerations, some components of the overall GEM test beam activity can be moved to the SSCL once test beams from the MEB become available, but the higher energy ($\geq$ 170 GeV/c) aspects of the Fermilab program will remain uniquely important to GEM until test beams from the HEB become operational.