2615 H d.

Calorimeter Production

Don Makowiecki / Steven Bellavia
Brookhaven National Laboratory

PAC Review
May 25-26, 1993

Fabrication Procedure

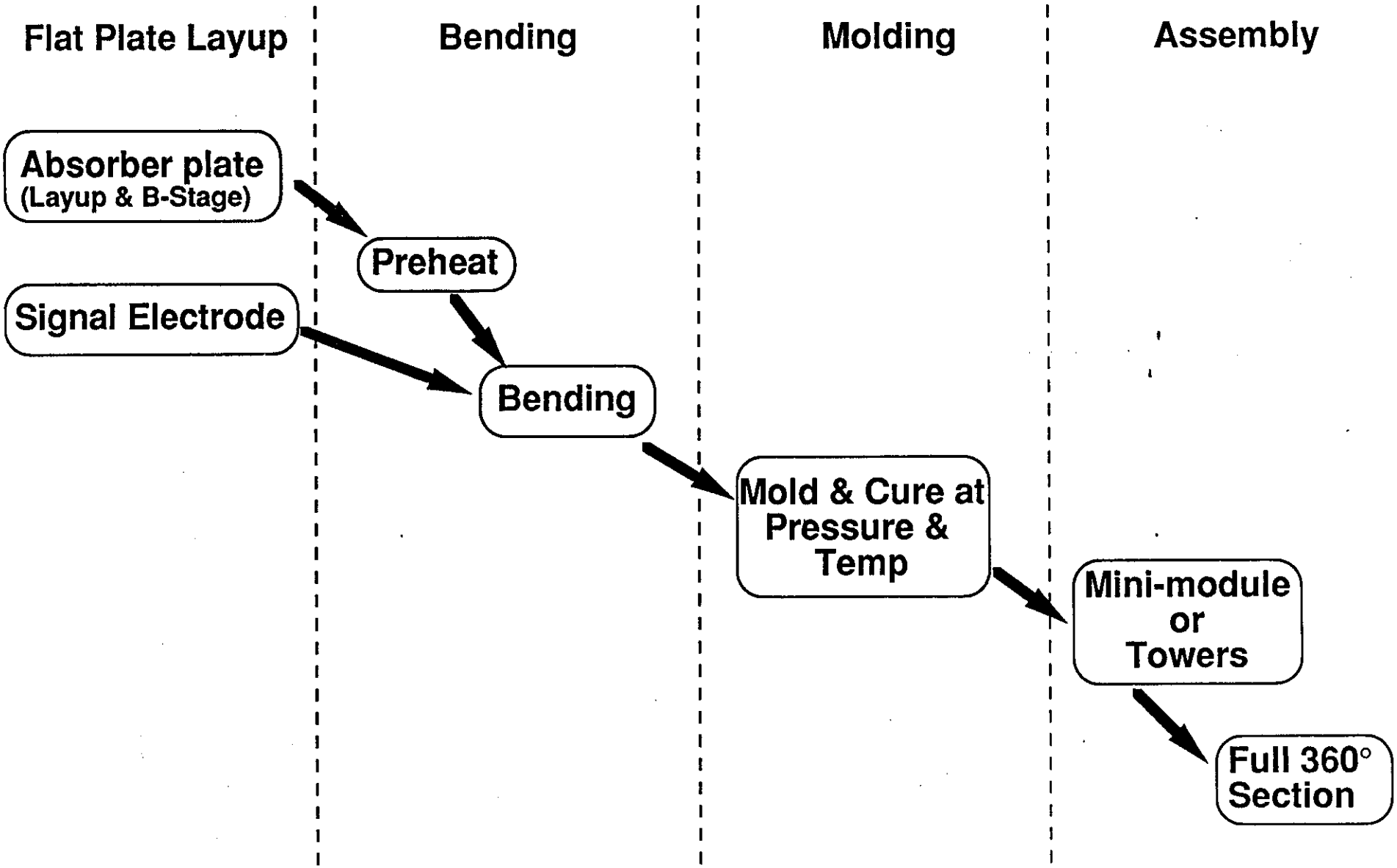

Absorber and Signal Electrode Plate Layups

Absorber

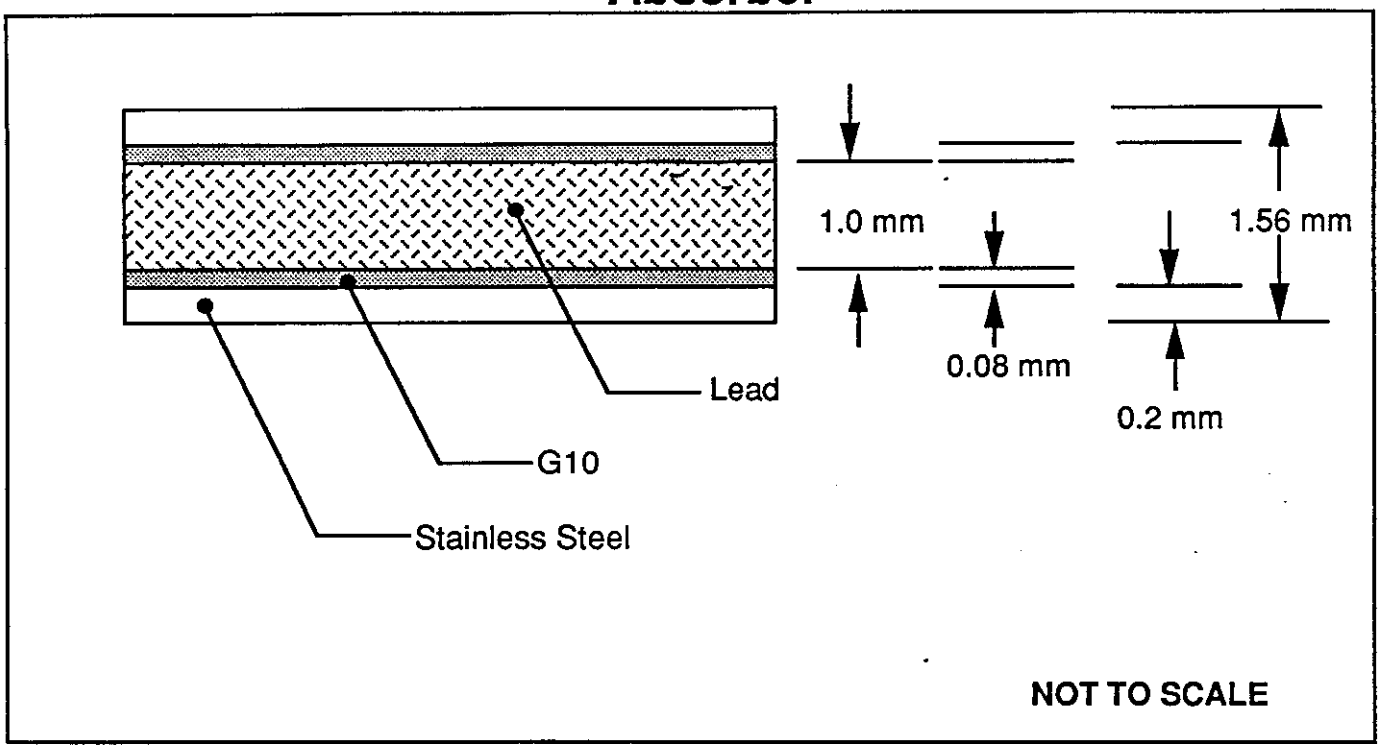

Signal Electrode

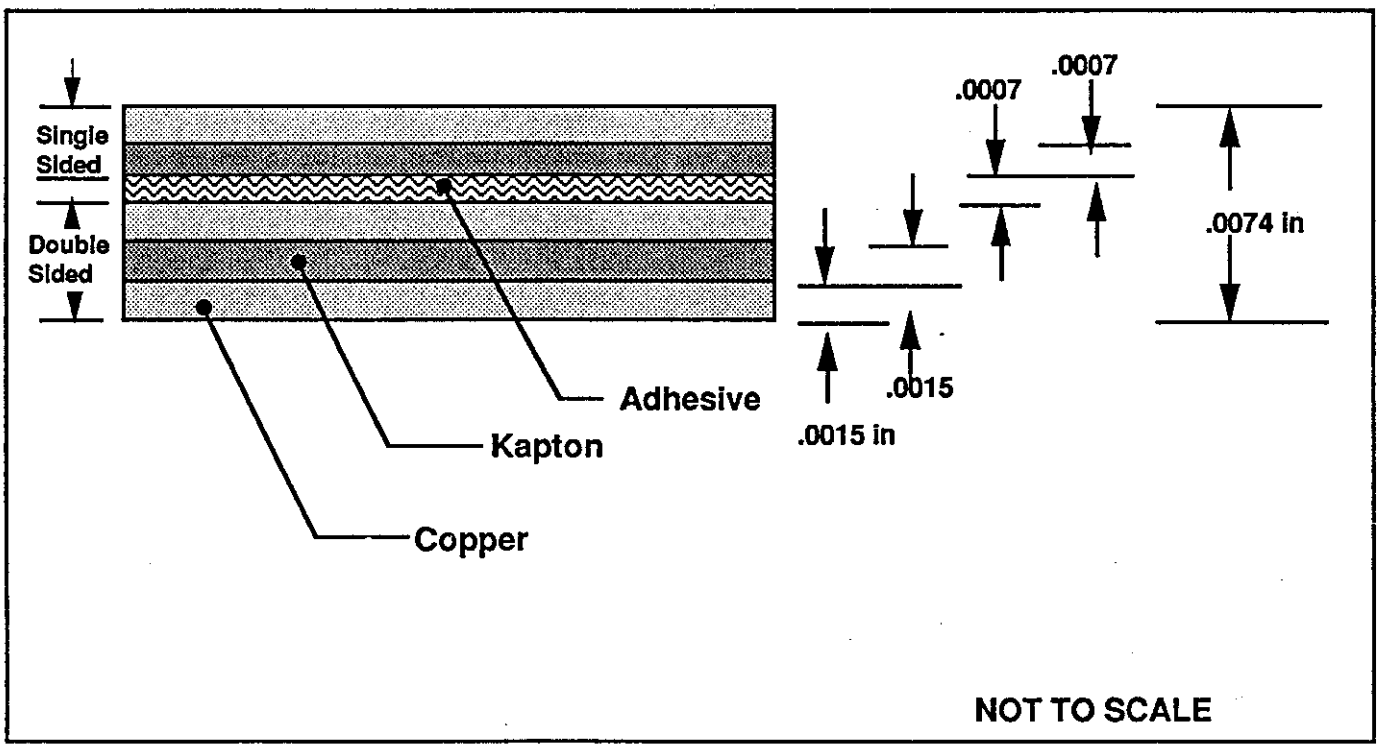

EM Barrel Calorimeter Production Plan

Prototype (18° Mini-module, Full Length):

Flat Layup	Bending	Molding	Assembly
BNL/Nevis	BNL/Grumman	Nevis	BNL/Nevis

Full Scale Production:

Flat Layup	Bending	Molding	Assembly
Shanghai Aircraft China	Shanghai Aircraft China	Shanghai Aircraft China	BNL/Nevis

Calorimeter Production Plan (cont.)

Bending Machine/Press:

- Common Bending Machine Design:
  - — Grumman Aerospace Press (Prototype)
  - — Shanghai Aircraft (Full Scale Prod.)
  - — Dies for both Machines from Shanghai Aircraft
  - — Same Machine for Barrel & End Cap

Mold/Mold Press:

- Common Mold and Mold Press Design:
  - — Same Press for Barrel & End Cap Prototypes
  - — Same Mold Design for U.S. & China Production

EM Accordion Plate Production Dimensional Tolerances

Absorber Plate Raw Materials:

Lead	+/- .025 mm
G10	+/- .025 mm
Stainless	+/- .025 mm

Absorber Plate Accordion Geometry:

Location of Centers of Radii:	+/- .10 mm
Angular Dimensions:	+/- 0.5 °

Bending Machine Dies

Location of Centers of Radii:	+/- .05 mm
Angular Dimensions:	+/- 0.35 °

Bending Machine Structure

Maximum Deflection:	+/- .025 mm

Mold

Location of Centers of Radii:	+/- .025 mm
Angular Dimensions:	+/- 0.25 °

Mold Structure

Maximum Deflection:	+/- .025 mm

EM Barrel Absorber Plate

Massless Gap Requires Flat Lay-up To Be B-staged Prior to Bending

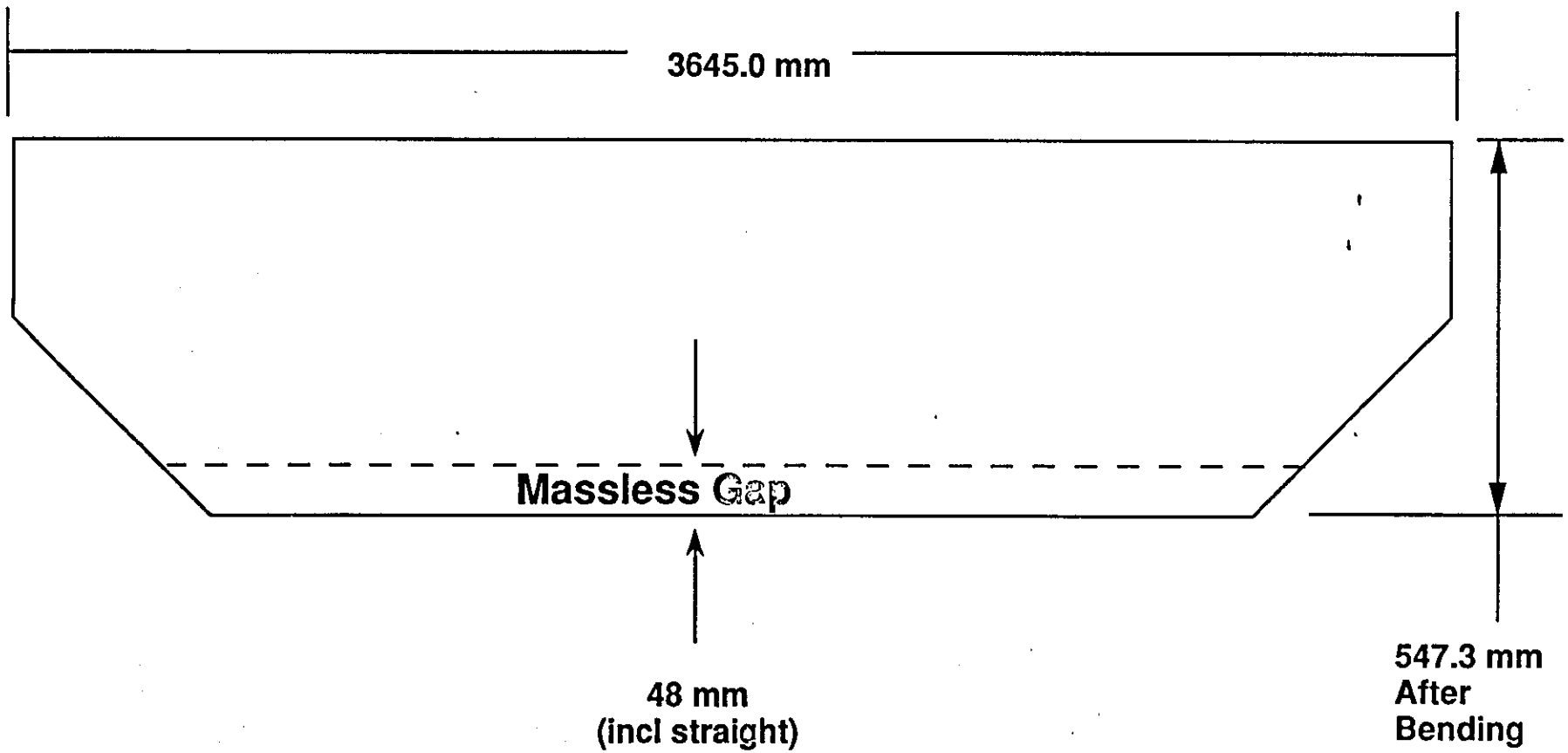

CERN BENDING MACHINE
GEOMETRY, 6/21/91 RFQ
DD-11368 PPE

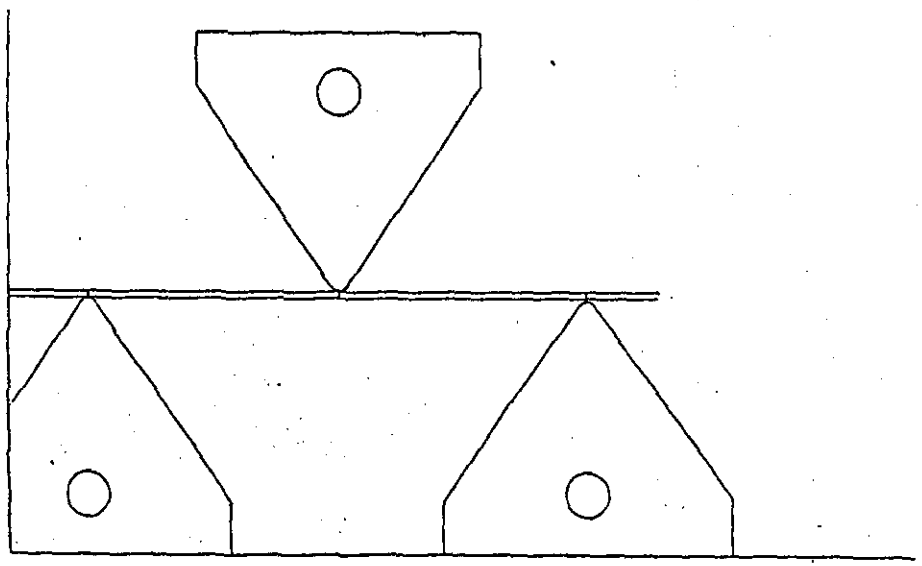

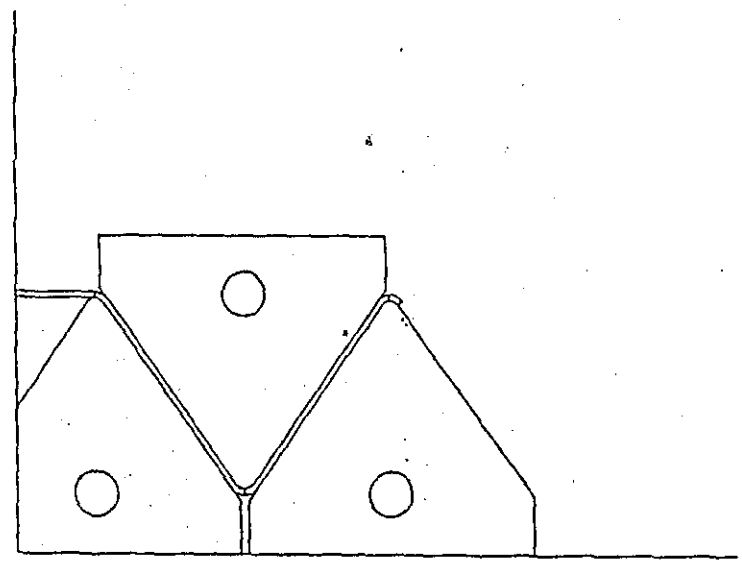

BNL/GRUMMAN BENDING MACHINE/PRESS

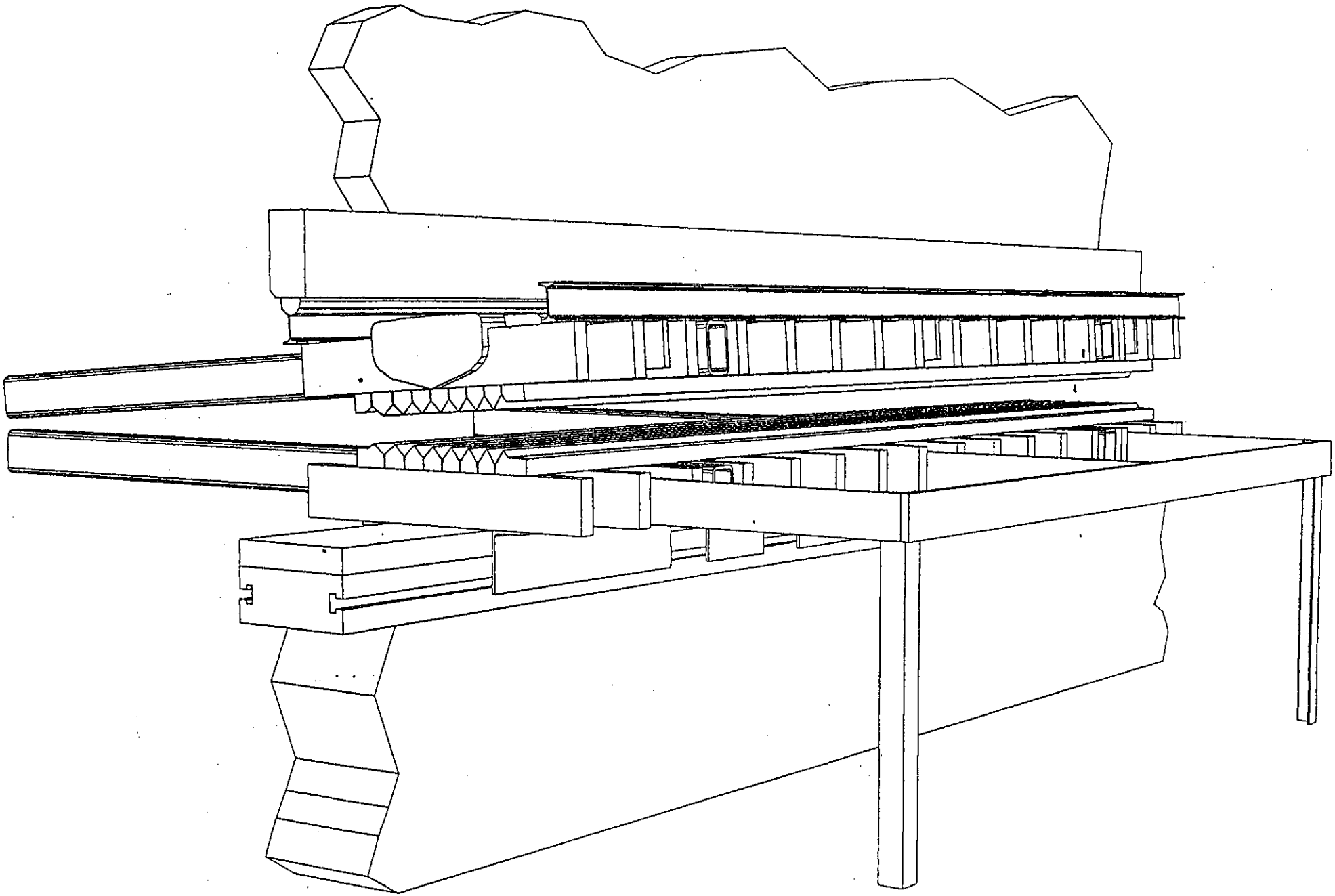

BENDING MACHINE DIE CONFIGURATION

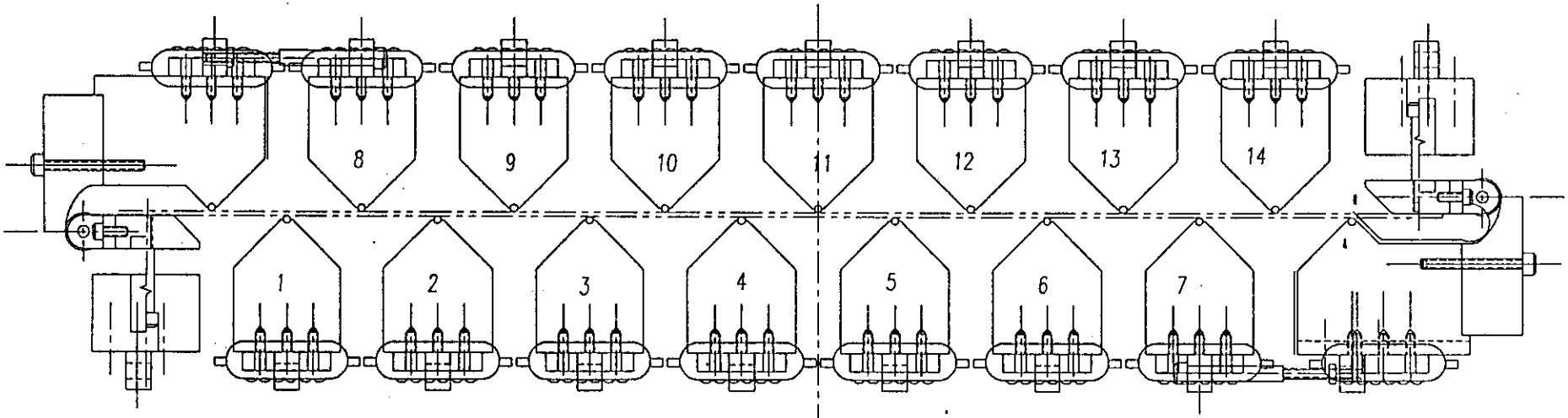

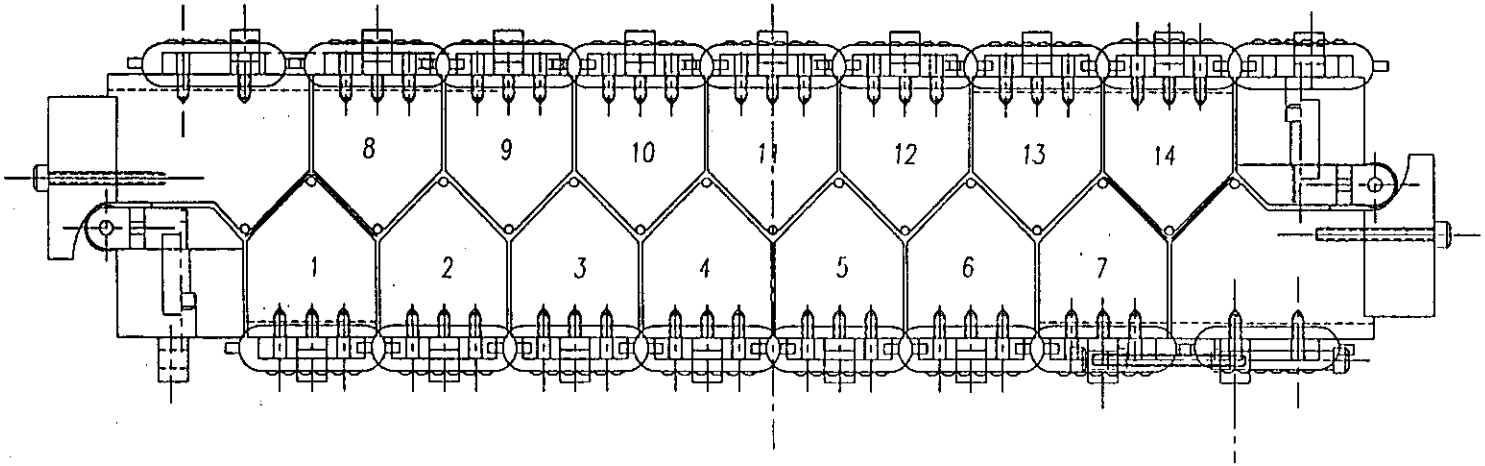

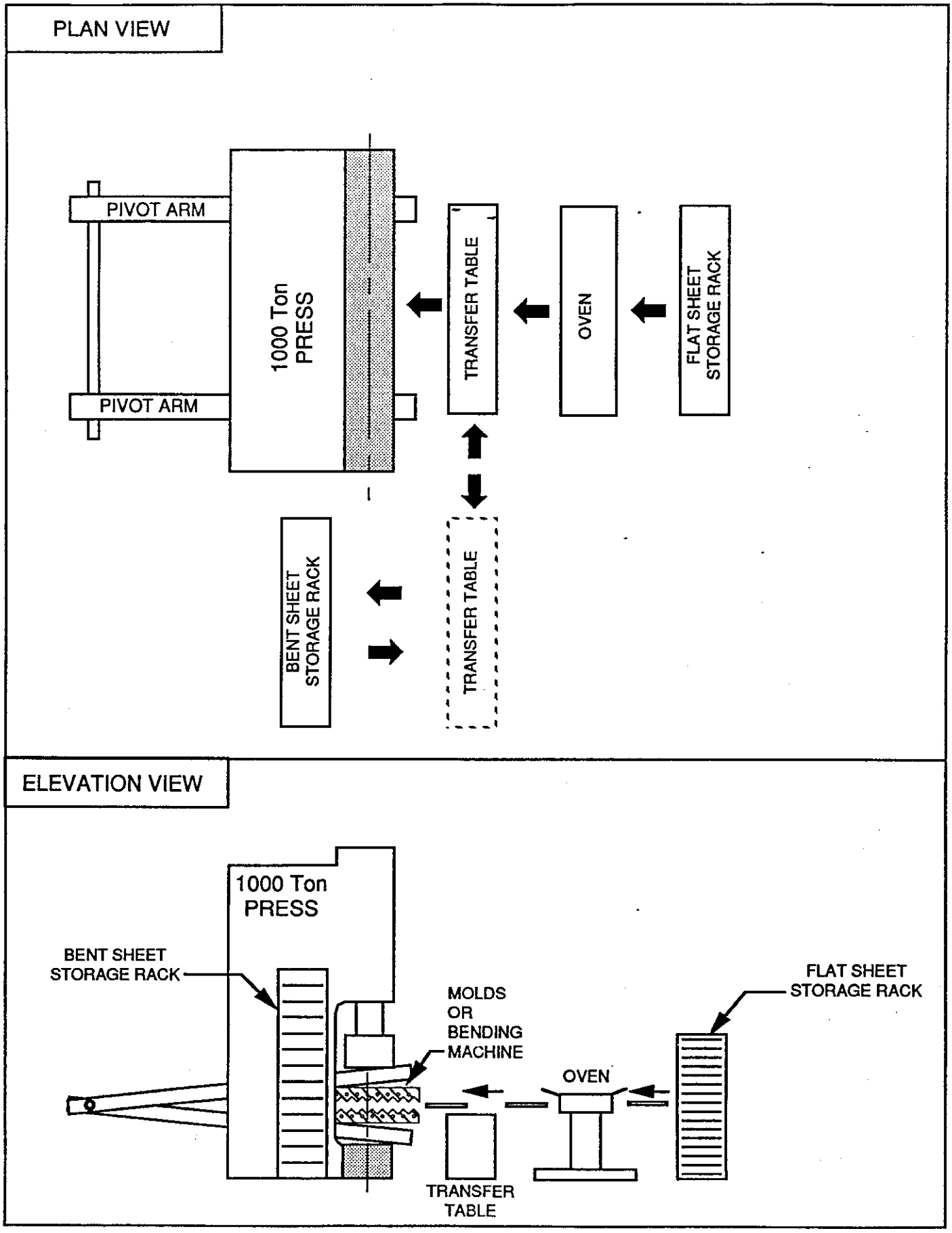

Fig. 3.2.2B Bending, Transfer & Storage Handling Scheme

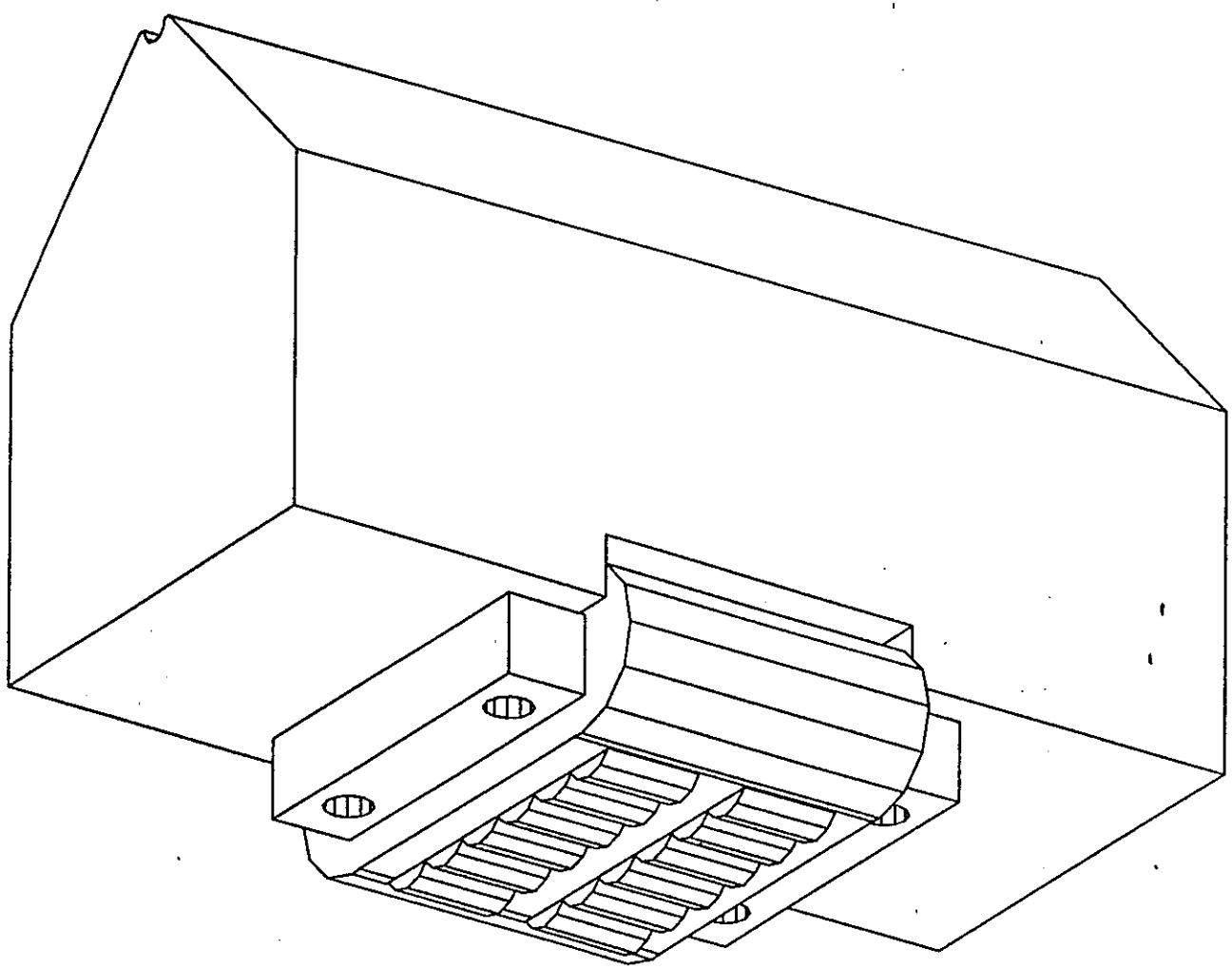

DIE ROLLER ASSEMBLY

BENDING MACHINE END CLAMPING ASSEMBLY

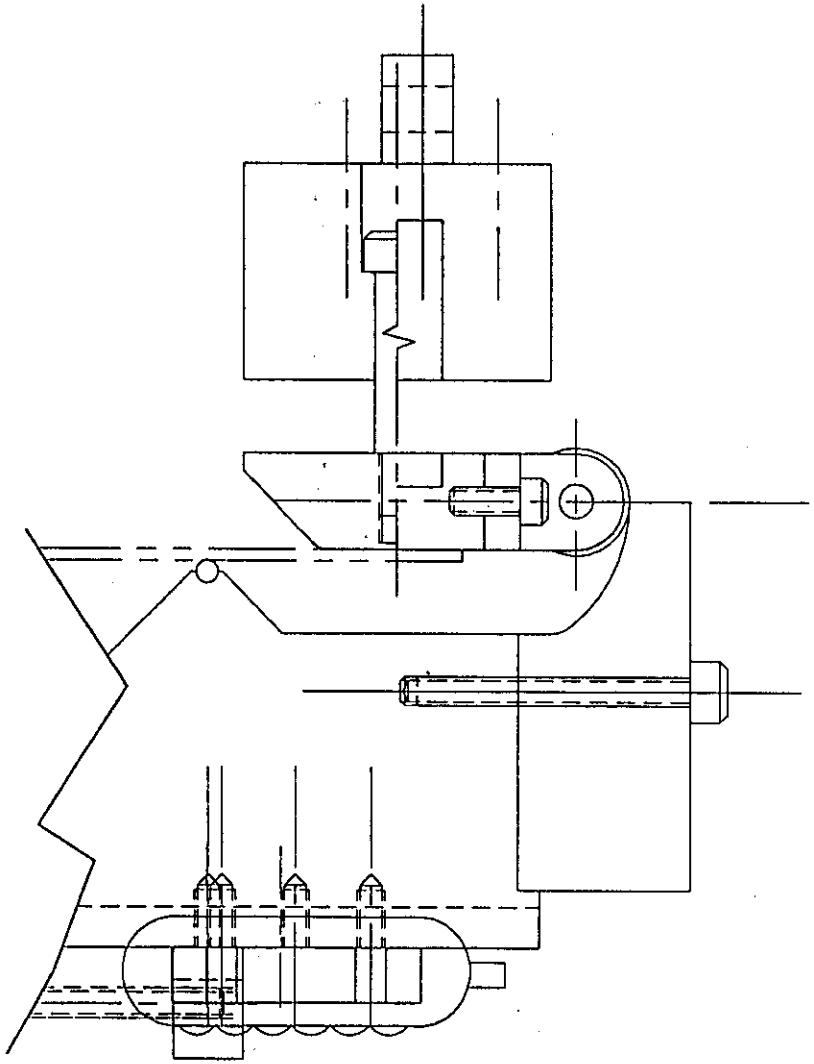

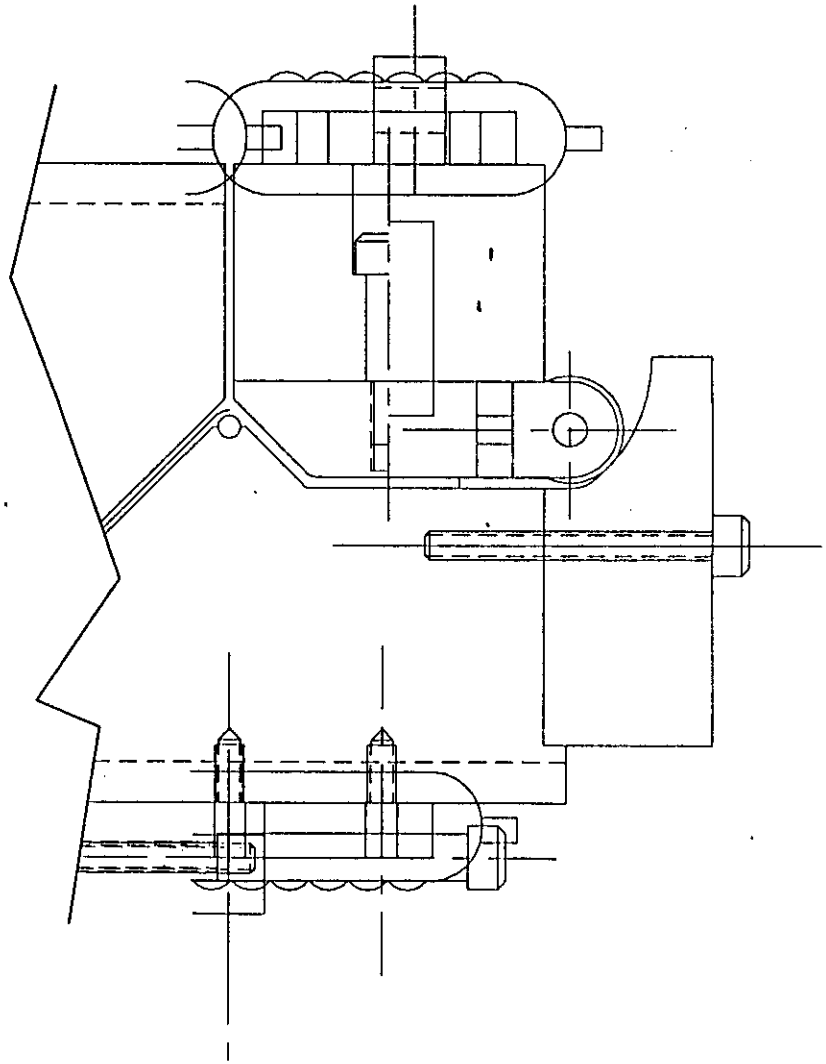

Insulated Bending Machine Dies

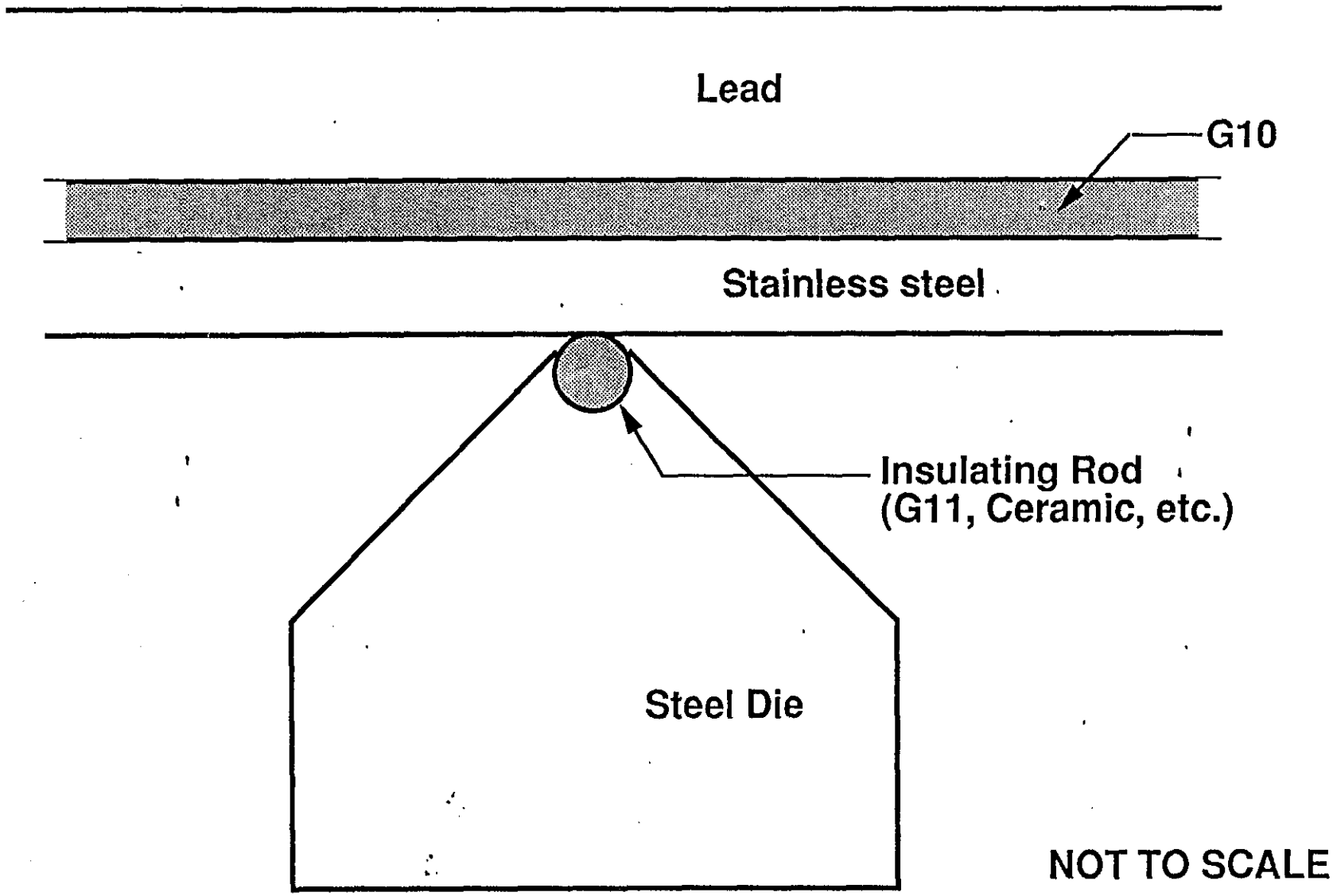

TYPICAL BENDING MACHINE DIE

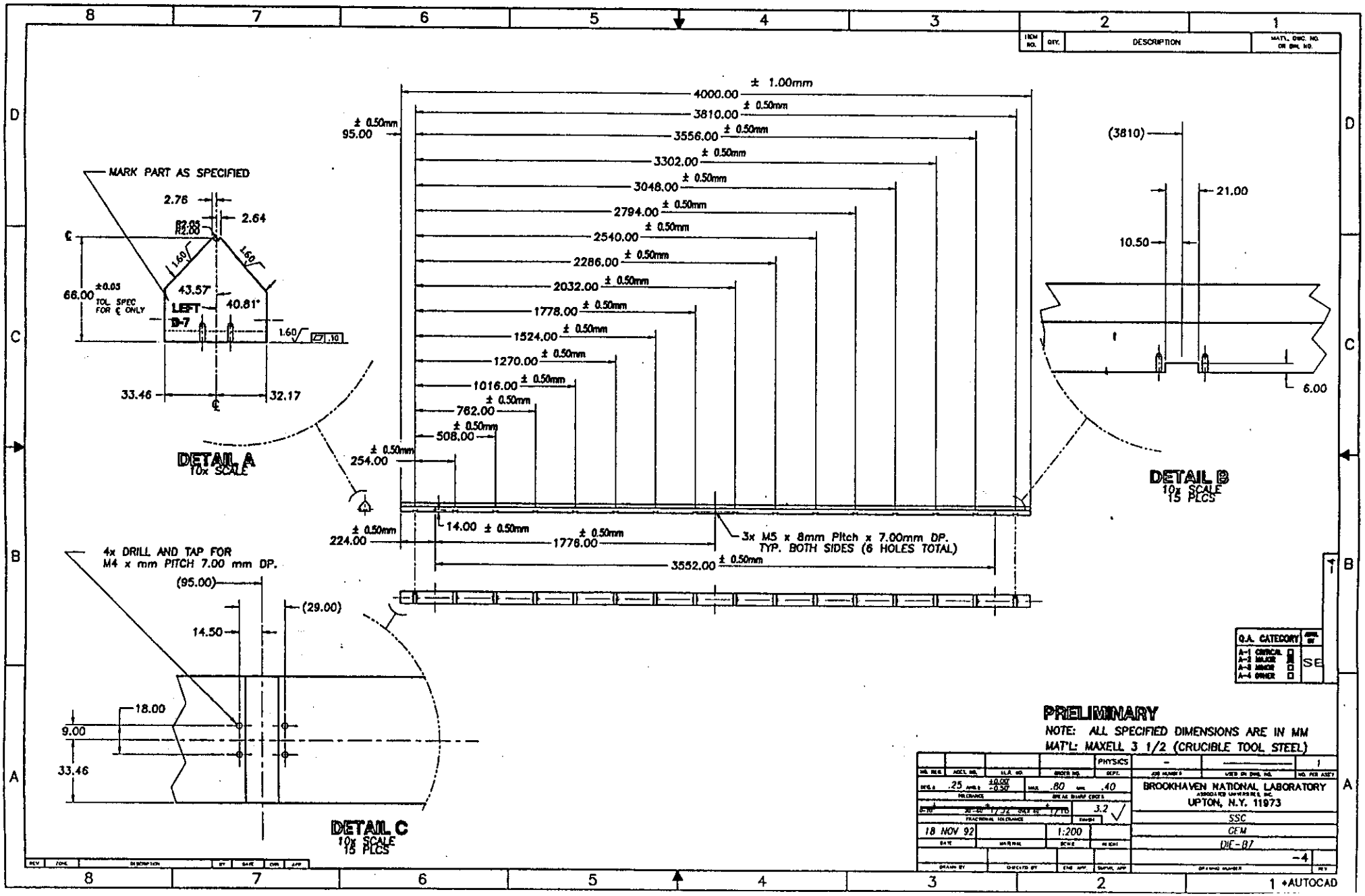

Absorber Molding Pressure & Temperature

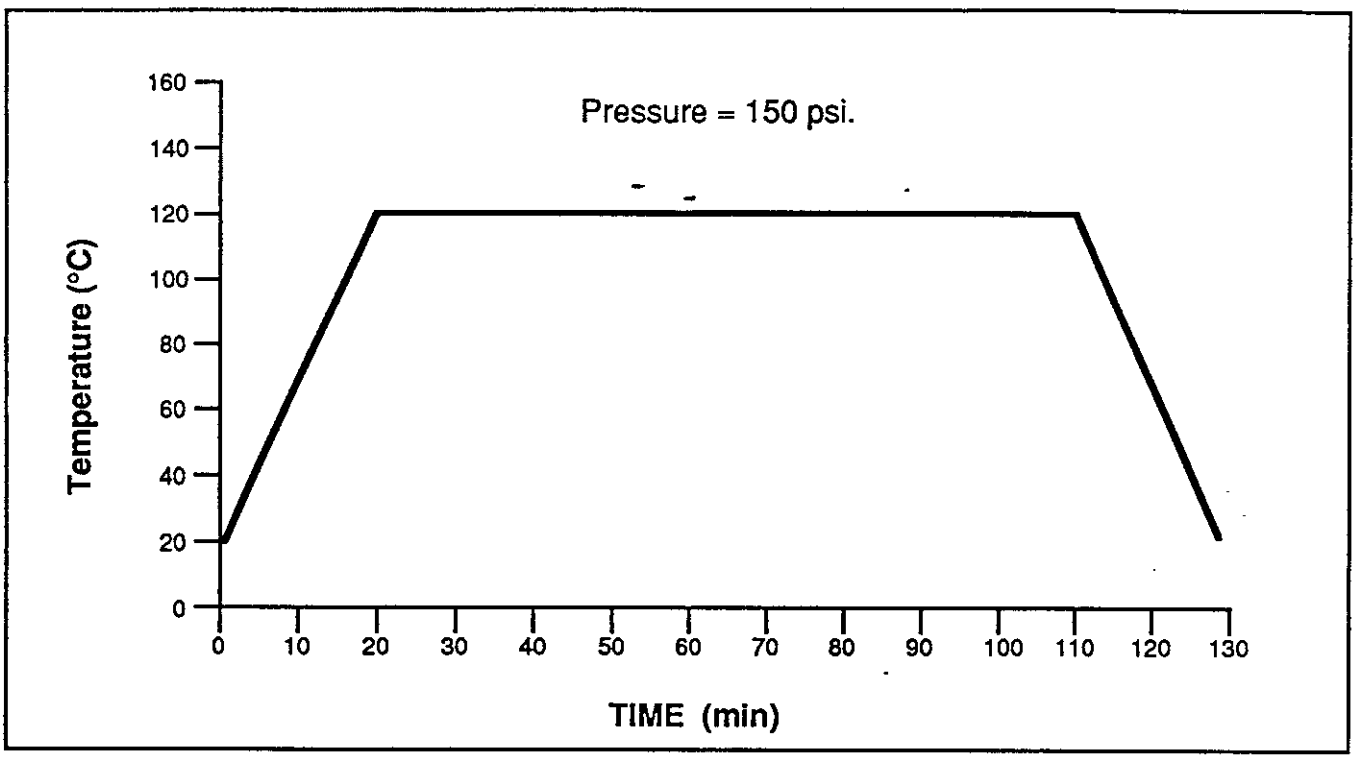

Absorber Plate & Signal Electrode Molds

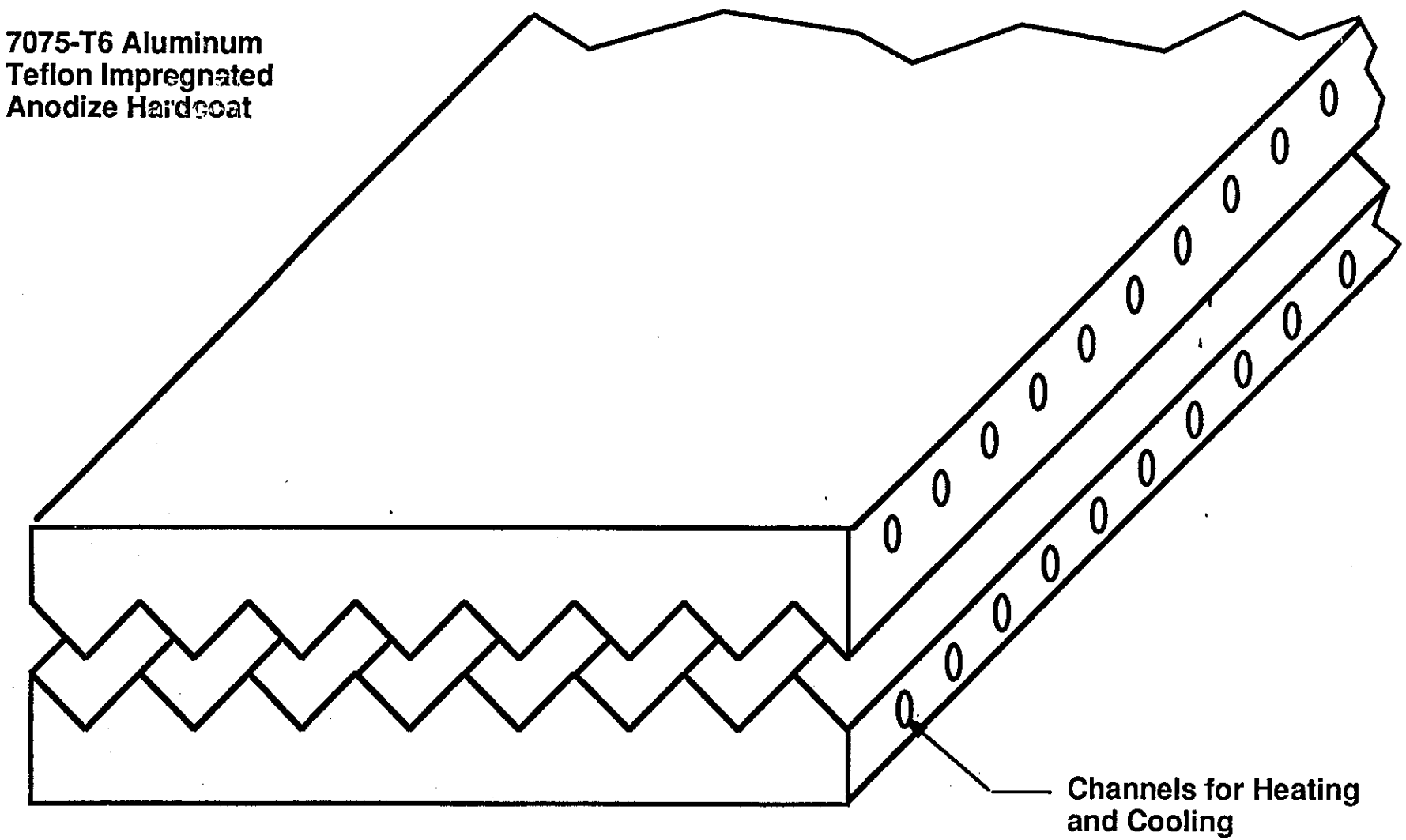

EM UPPER MOLD DETAIL

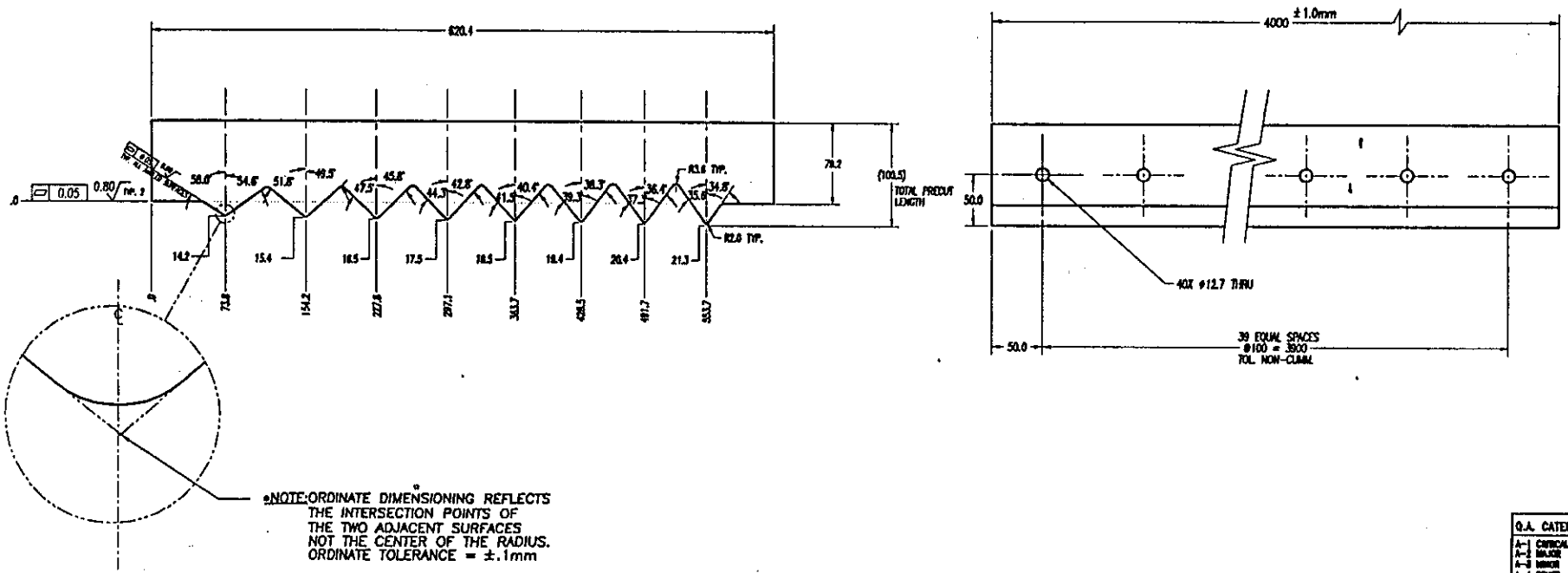

ITEM NO.	QTY.	DESCRIPTION	MAT'L, DWG. NO. OR BML NO.

Q.A. CATEGORY: A-1 CRITICAL ☐ A-2 MAJOR ☒ A-3 MINOR ☐ A-4 OTHER ☐

SE

MAT'L: ALUMINUM 7075-T6

PHYSICS

DECIMALS .25mm 10' ANGLE .80 MIN .40 BREAK SHARP EDGES

FINISH 3.2

20 NOV 92 | NOTED | 1:2

R. RUGGIERO | S. BELLAVIA | S.B.

BROOKHAVEN NATIONAL LABORATORY
ASSOCIATED UNIVERSITIES, INC.
UPTON, N.Y. 11973

GEM
TOOLING
EM-MOLDS

-4 A

1 •AUTOCAD

MOLD THERMAL MANAGEMENT SYSTEM

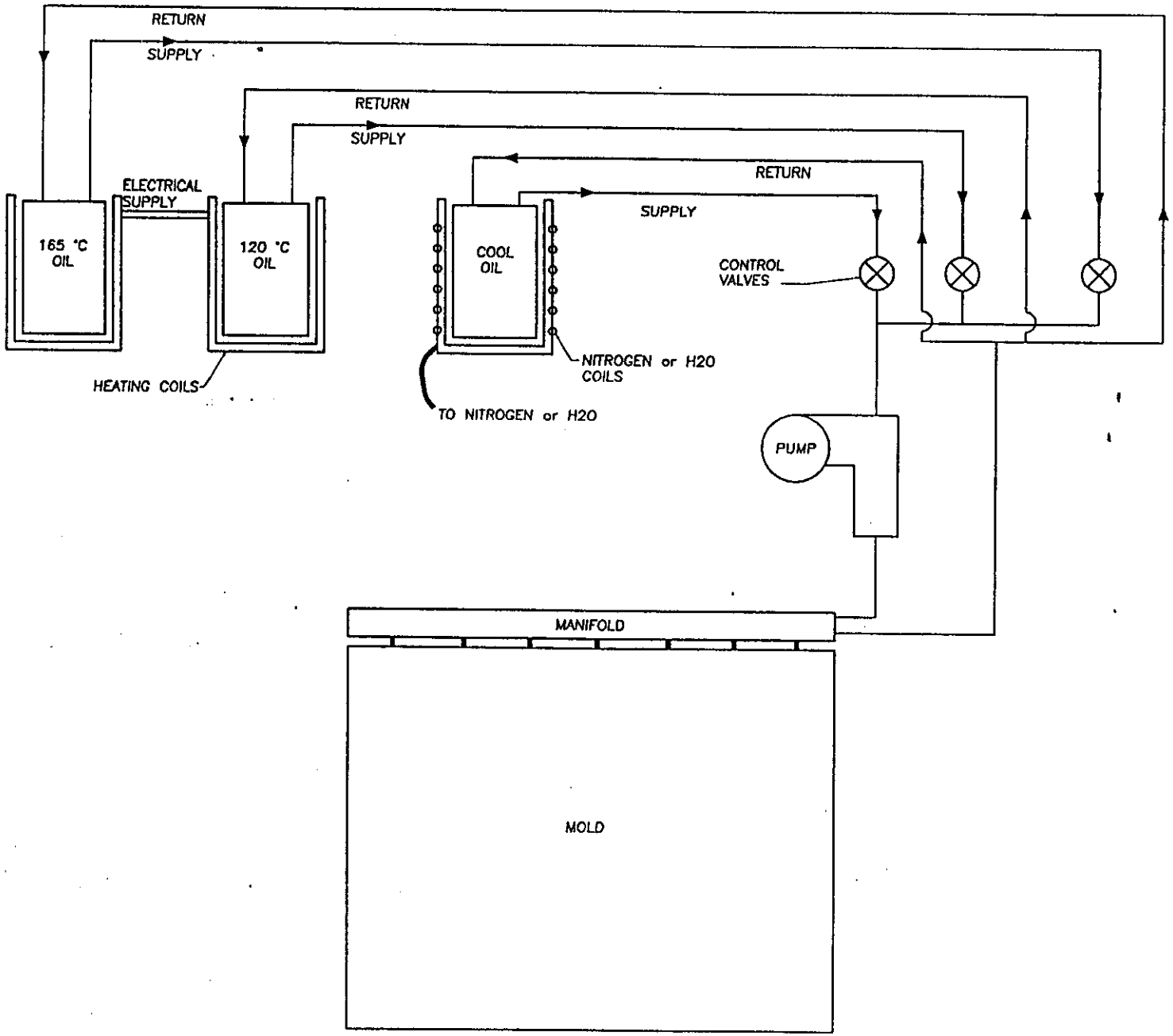

Barrel Electromagnetic Module

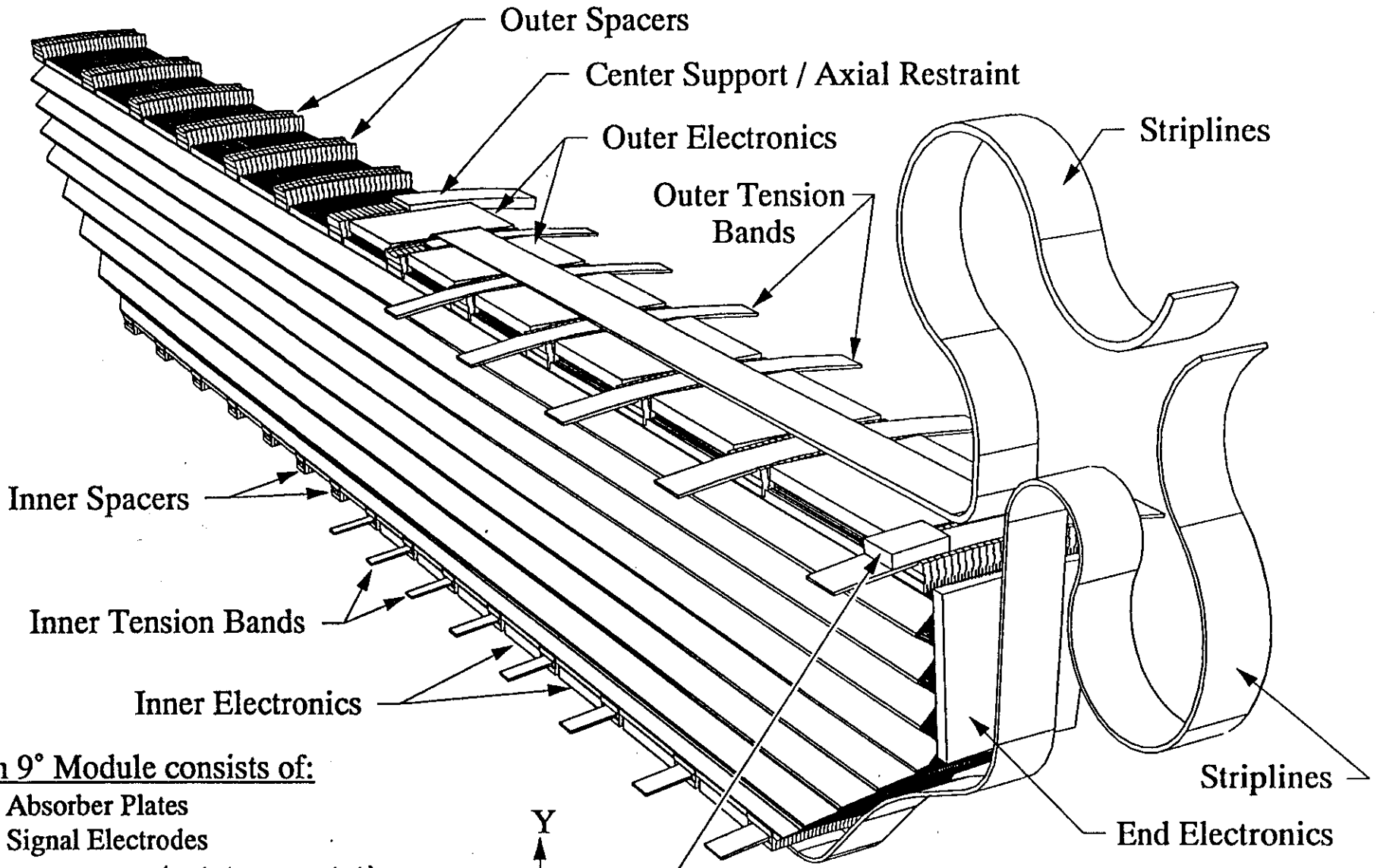

Each 9° Module consists of:

- 24 Absorber Plates
- 24 Signal Electrodes
- 84 Towers in η ($-1.1 \leq \eta \leq 1.1$)
- 6 Towers in φ
- 3 Depth Segnents

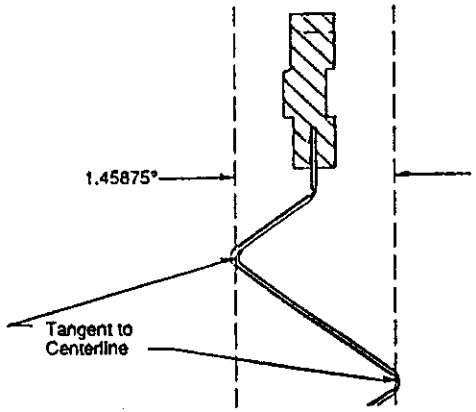

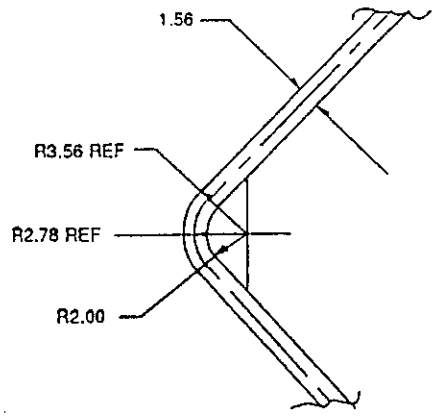

0.20 Stainless Steel
0.08 Prepreg
1.00 Lead
0.08 Pregreg
0.20 Stainless Steel
1.56 Total Thickness

Dimensions are in mm and represent the Absorber plate at LKr temperature.
Delta Eta = Delta Phi = 2 * PI/240

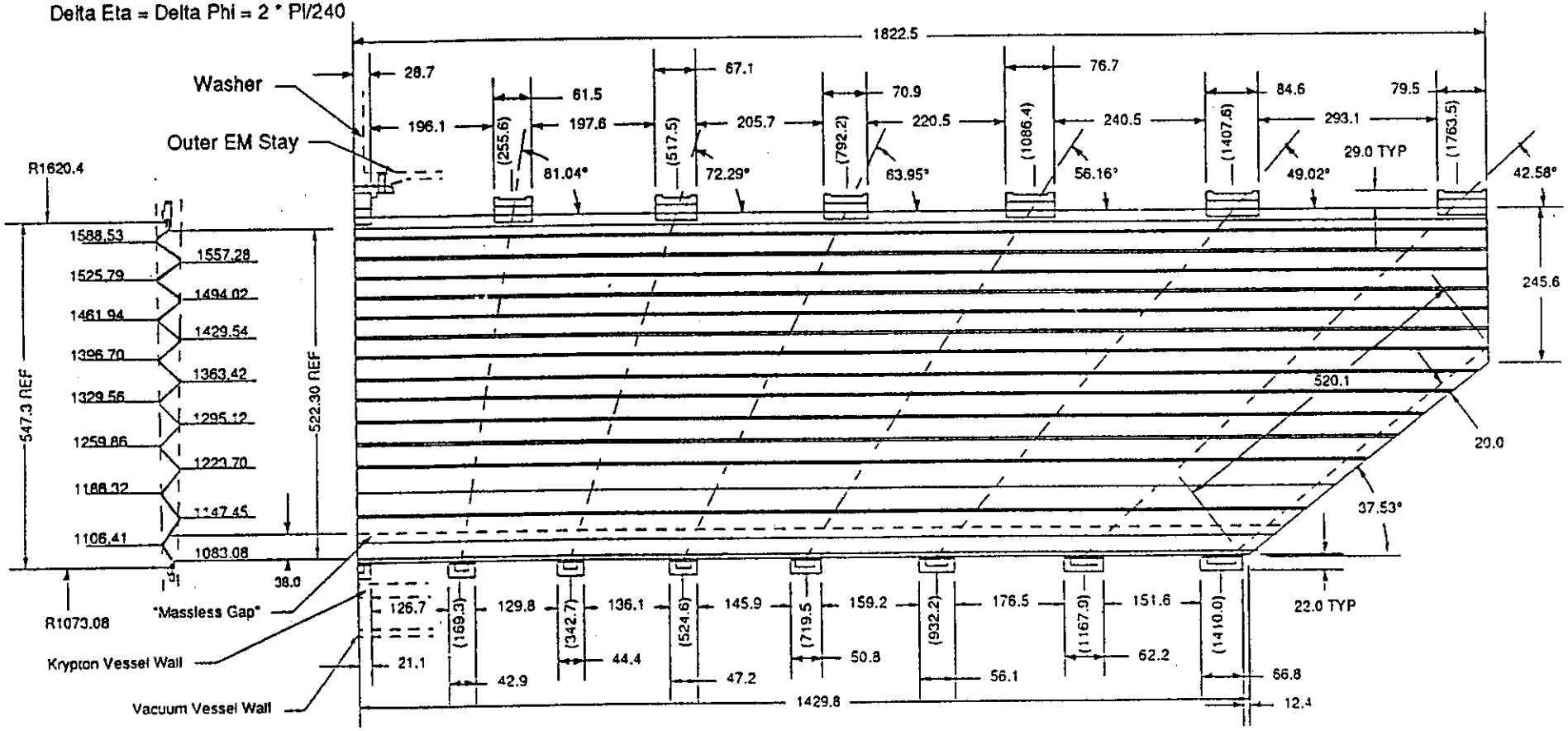

Barnstable:EM_Details:930304

Signal Electrode

(Flat and Ambient Temperatures)

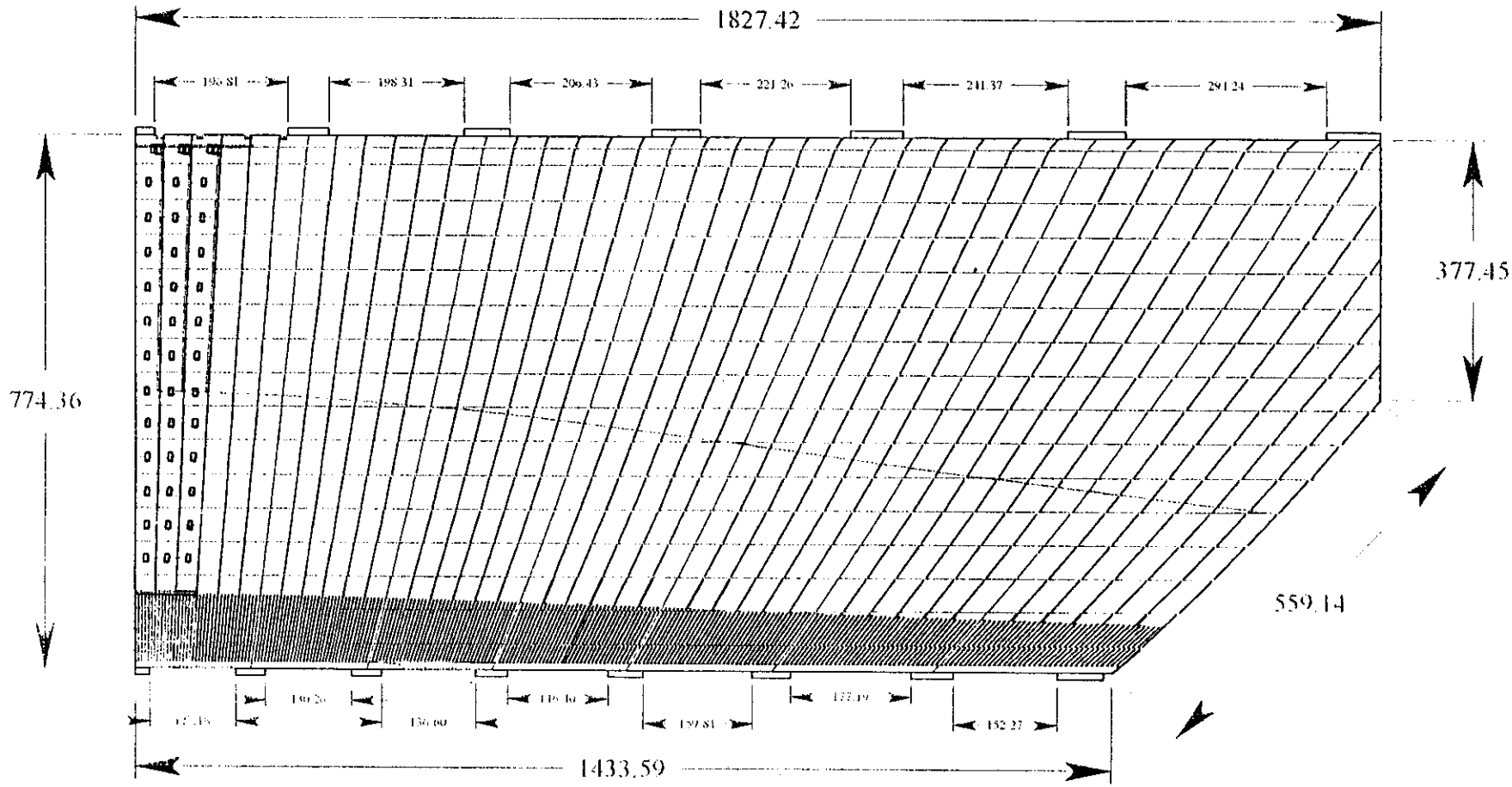

DSM
4/1`2/93

Conceptual Drawing (EM Barrel)

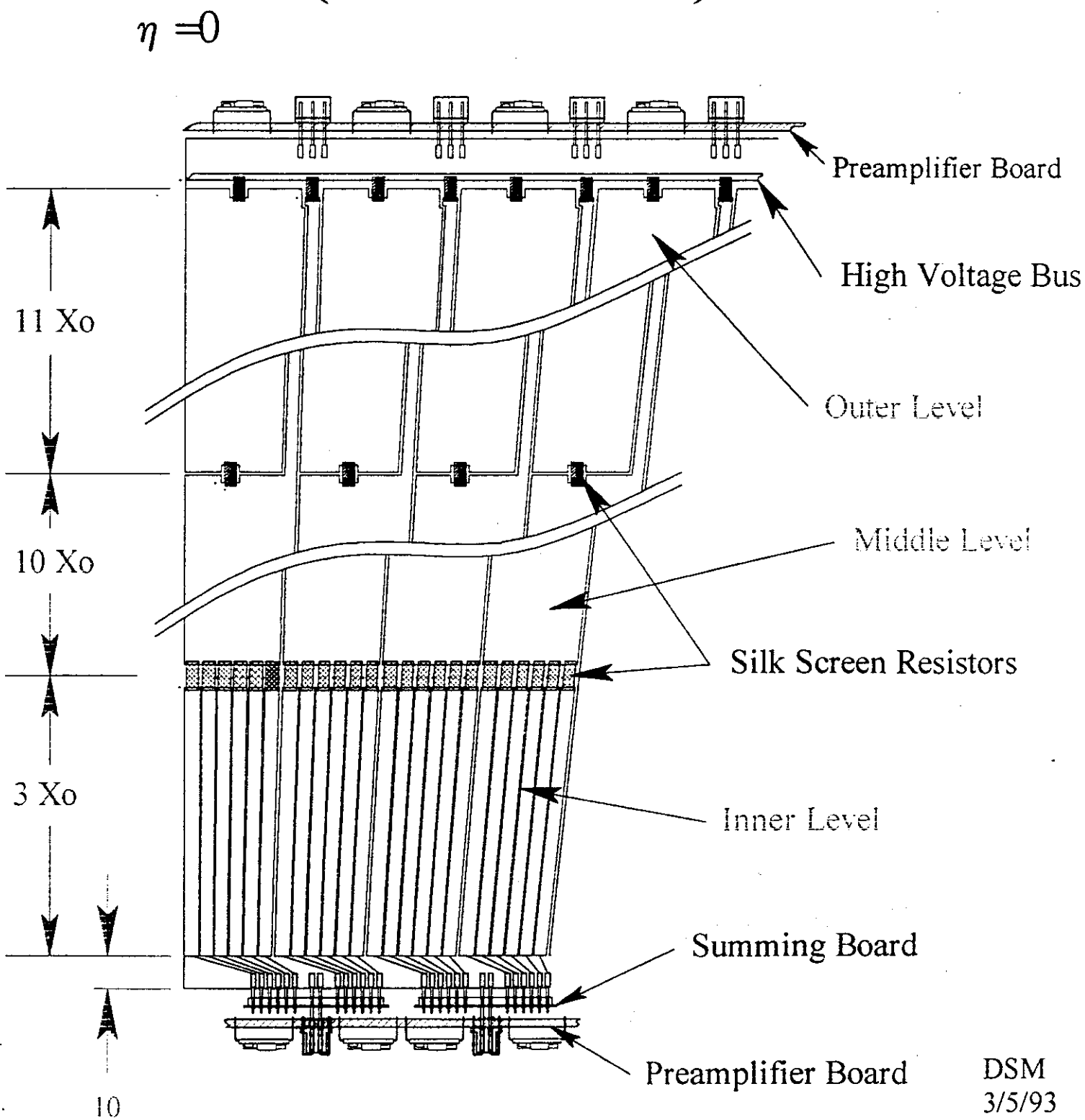

DSM
3/5/93

High Voltage Distribution
(Signal Electrode)

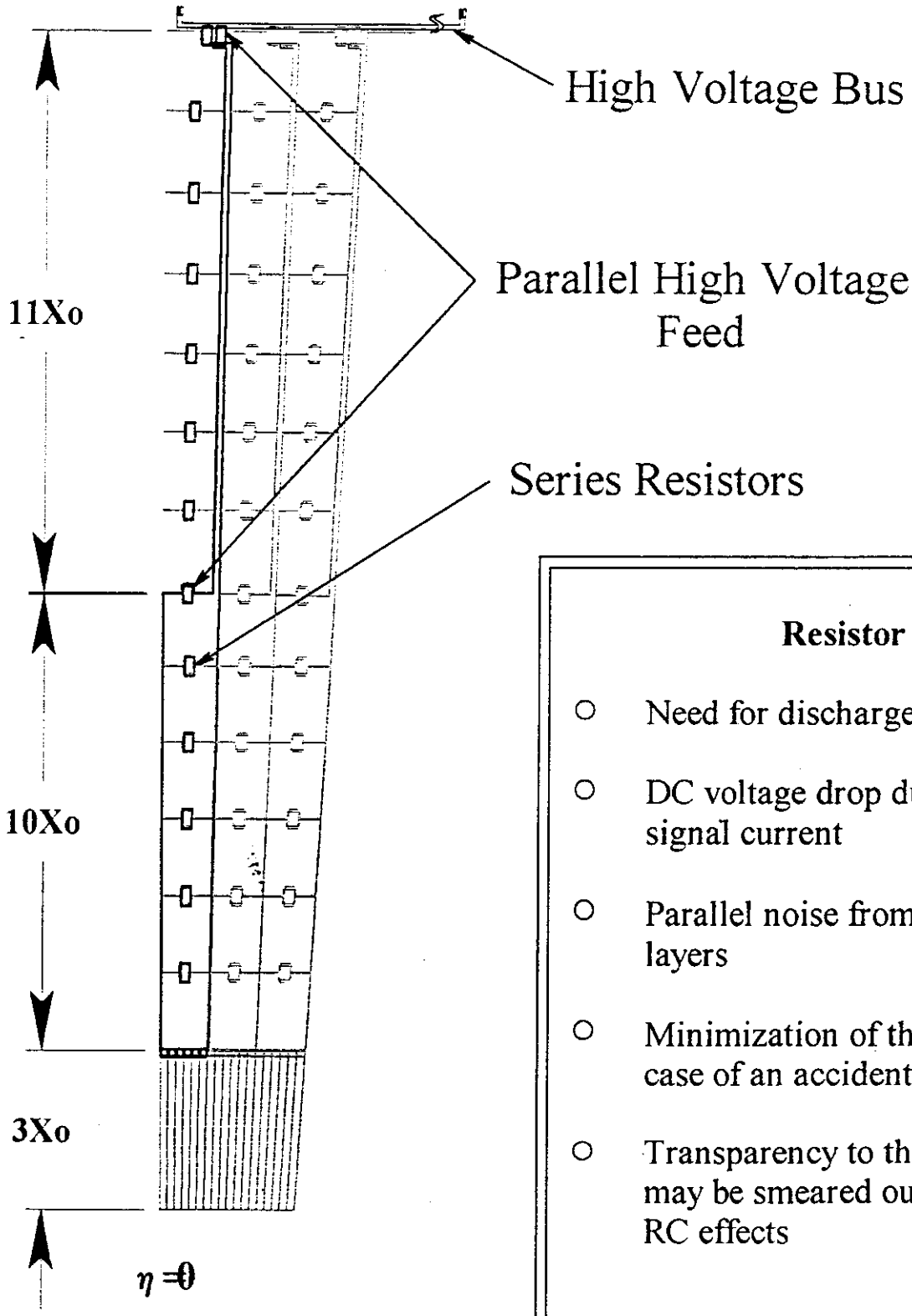

Resistor Values

- Need for discharge protection
- DC voltage drop due to average signal current
- Parallel noise from the resistive layers
- Minimization of the dead region in case of an accidential short
- Transparency to the signal which may be smeared out due to diffused RC effects

Outer Barrel

(Signal and High Voltage Connections)

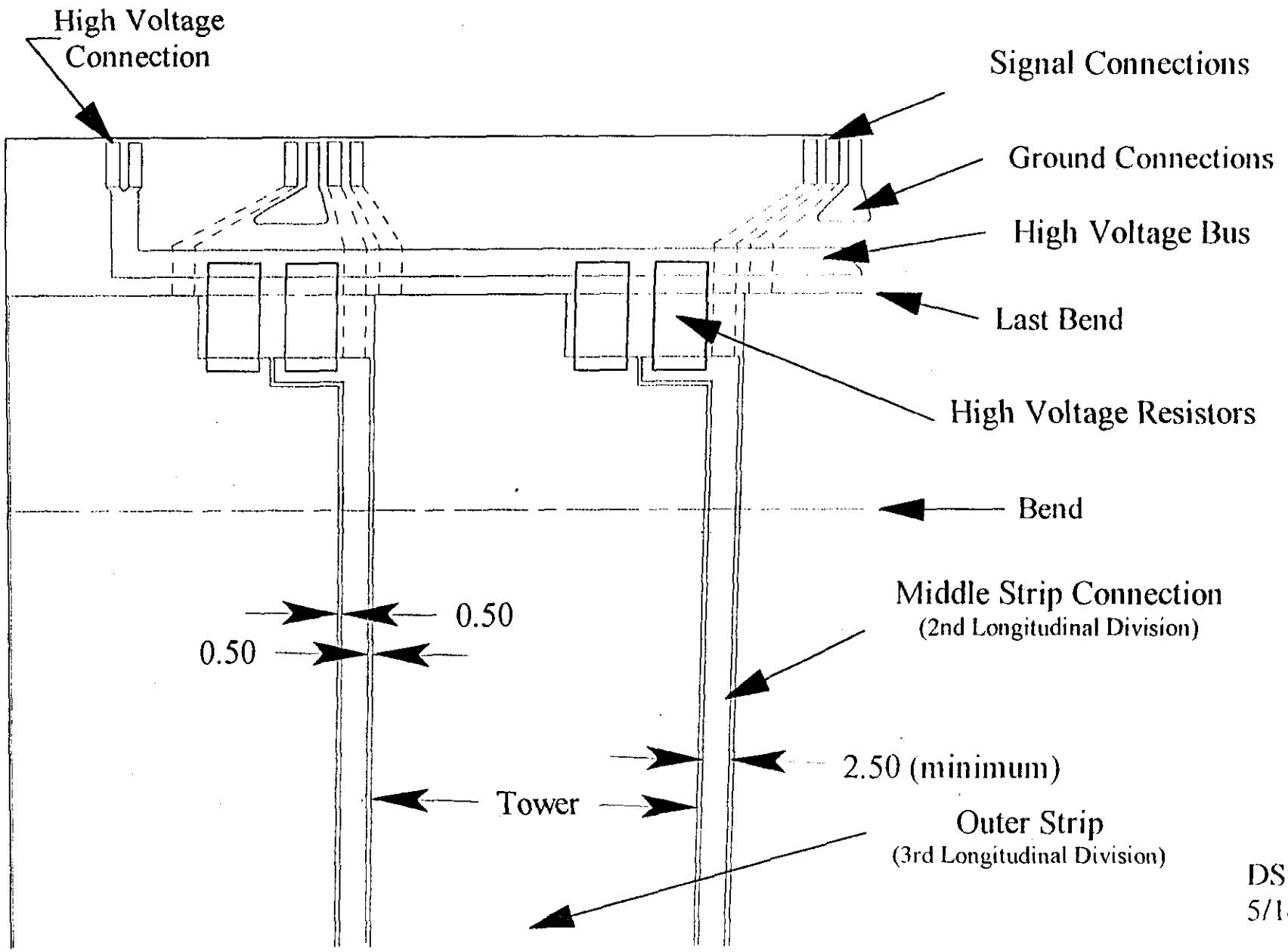

DSM
5/14/93

Spacing Between High Voltage and Signal Electrodes

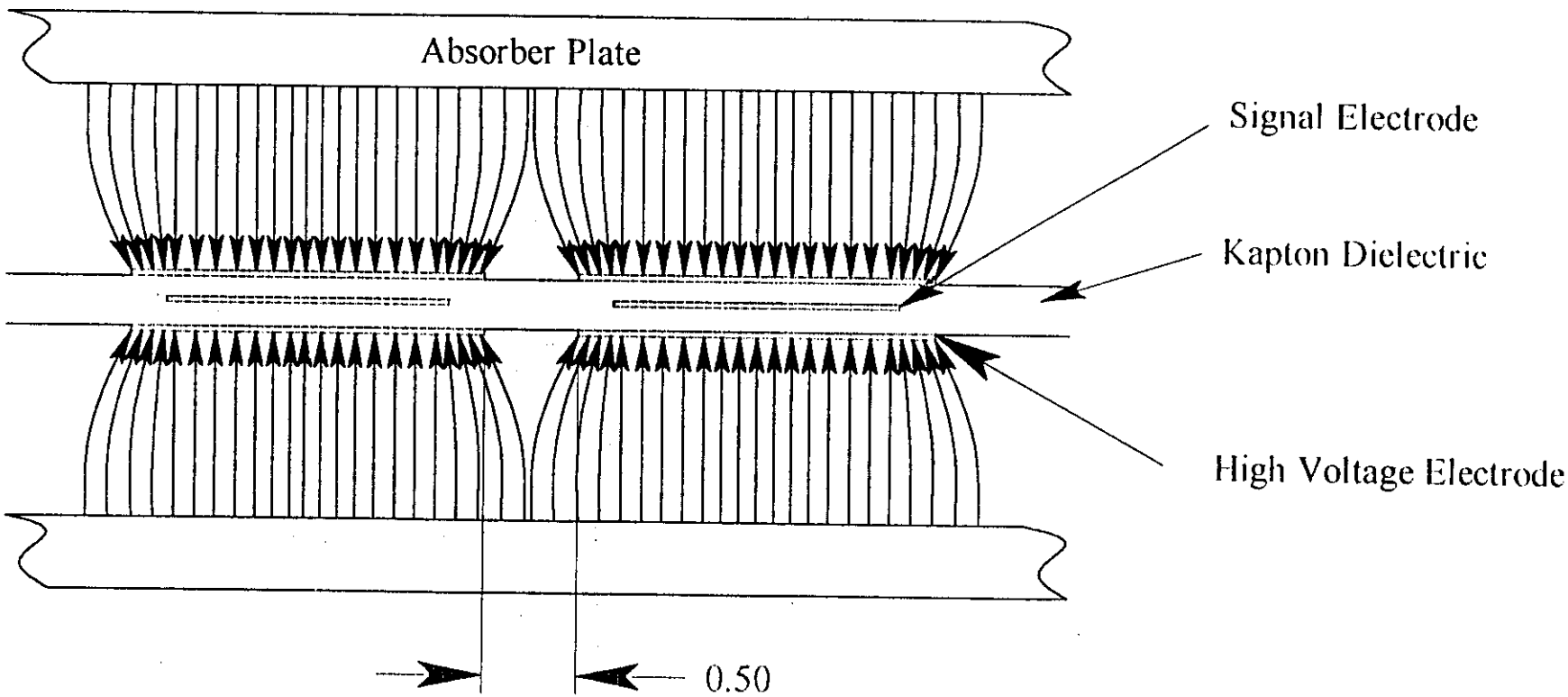

DSM
5/17/93

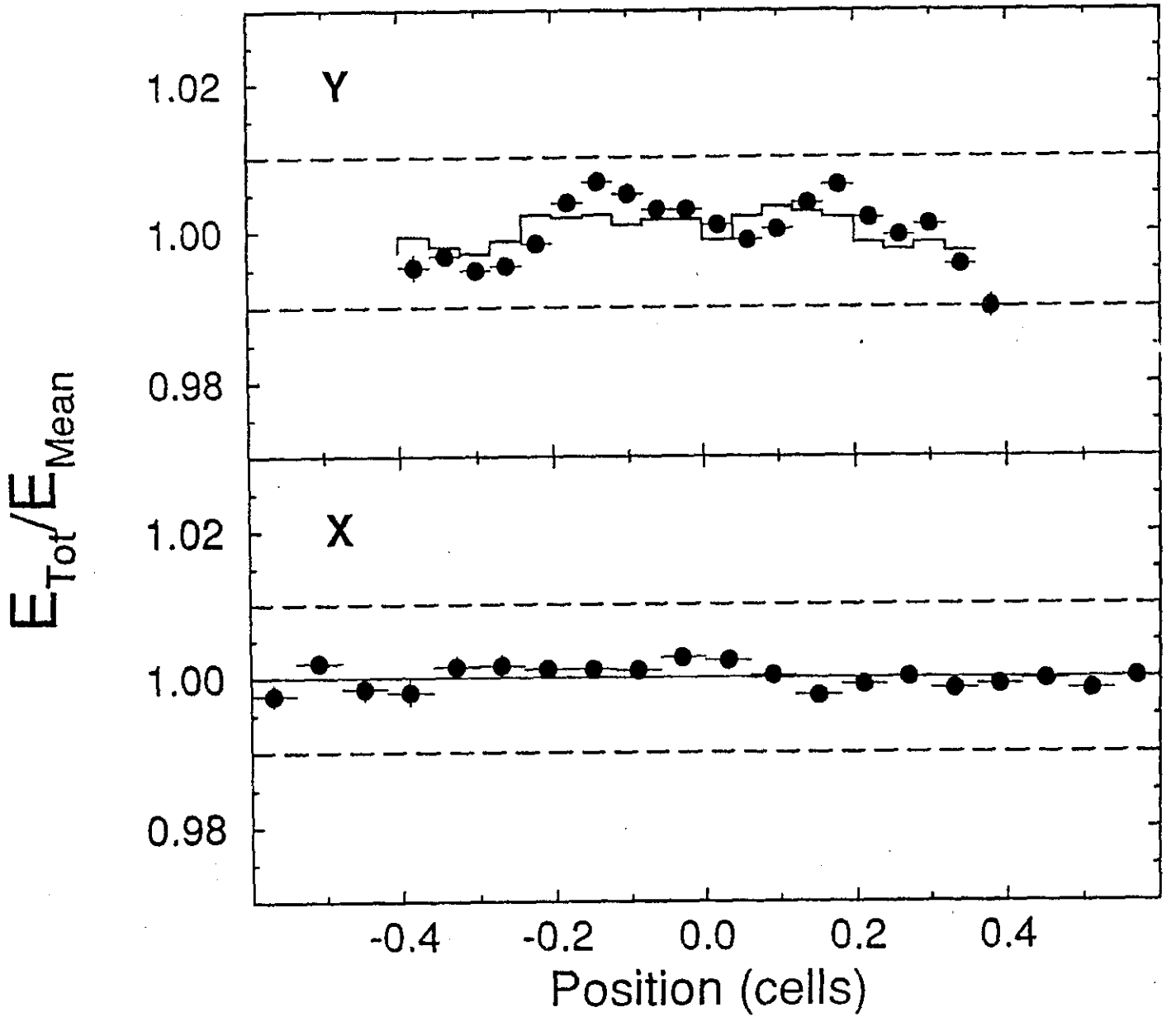
Y
X
1.02
1.00
0.98
1.02
1.00
0.98
E_{Tot}/E_{Mean}
-0.4
-0.2
0.0
0.2
0.4
Position (cells)

Inner Barrel

(Signal Connections)

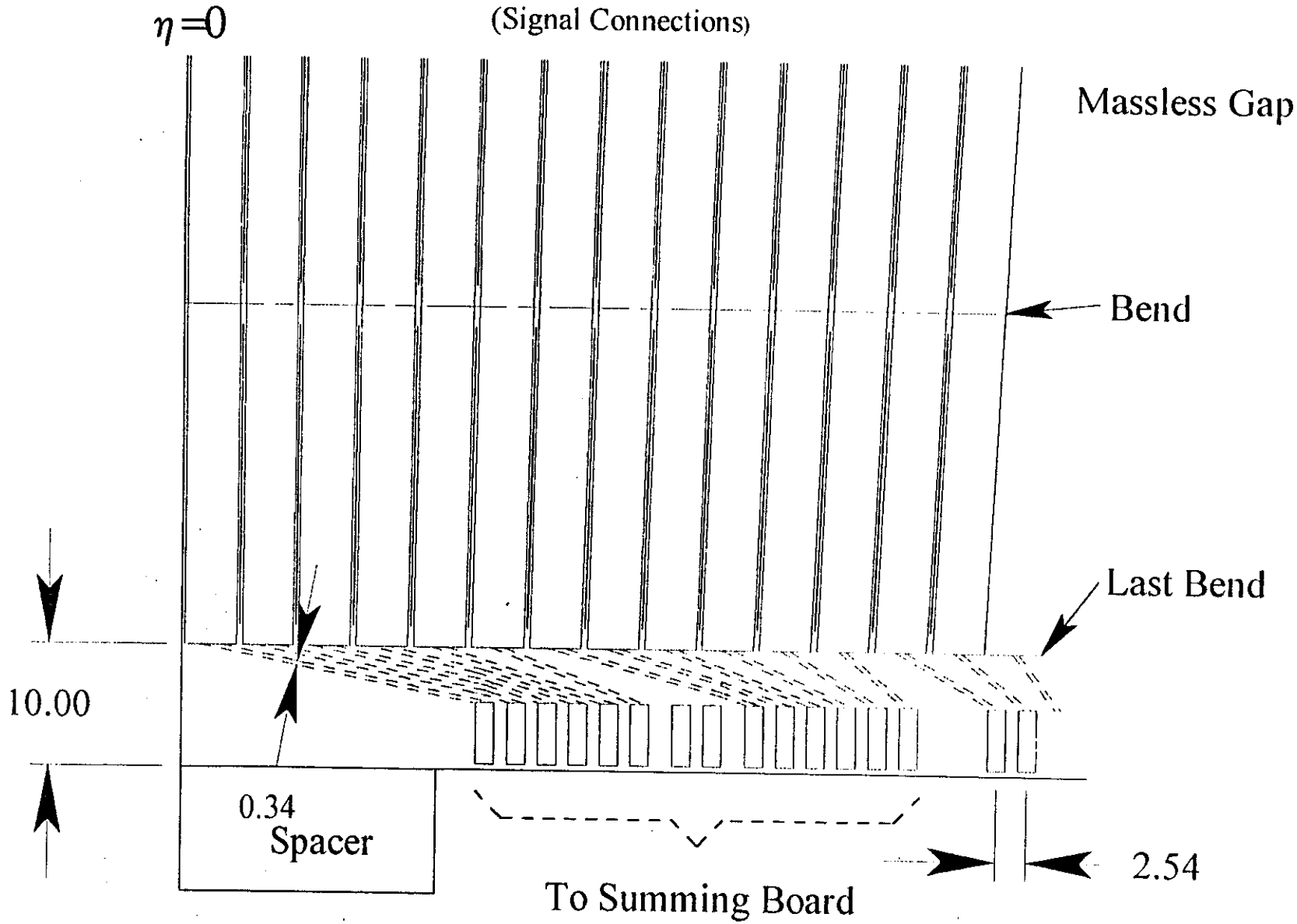

DSM
5/17/93

4.5. Production Scenarios

4.5.1. We have gained a great deal of experience over the years with the production of oversize printed circuit boards. We have learned many lessons. The first is quite obvious. Their are no simple solutions to complex problems. Second, money and outside experts cannot solve all problems. And finally, that the job must be matched to the manufactures equipment and capabilities. Modifying standard production methods or using production equipment in a method in which it was not intended to be used, usually results in an inferior product and *always* results in increased costs and delays. We intend to solicit bids from manufactures that have proven experience in the manufacture of large flexible circuits and have the appropriate equipment. The manufacture will deliver a completed signal electrode ready for bending into the accordion shape and requiring only post curing of the adhesives and inks. Electrical connections, e.g. signal and high voltage connectors, are installed after the electrodes are bent and thermo molded into there required shape.

4. Flexible Printed Circuits

4.1. A Primer

4.1.1. Understand first, that the equipment used in this industry is completely different from the equipment used in standard printed circuit technology. Standard equipment cannot simply be modified, it must be replaced with equipment designed to process materials on rolls hundreds of meters in length.

4.1.2. The first procedure is to attach the conductive material to the kapton. Two methods are utilized. The first technique uses an adhesive as the bonding agent and roller lamination methods to attach copper foil. The adhesive must be robust and resistant to the radiation damage expected in the GEM environment. A discussion of adhesives precedes this section. The second technique for bonding the conductor to the dielectric material, is to vacuum deposition a few angstroms of a conductive material directly onto the dielectric material. Additional material is plated up to the required thickness using traditional plating techniques. This method requires no adhesive and provides a much more robust adhesion to the dielectric material used.

4.1.3. Once the conductive material has been bonded to its dielectric base (lets assume that we have bonded copper to a kapton dielectric) the roll is run through an indexing machine. This machine punches precisely positioned indexing holes along the length of the kapton roll. The index holes usually run along the sides and are positioned approximately one meter apart. The exact pitch is determined by the processing equipment which follows. We now have a method to perform precise registration between layers or to return to a particular section over and over again to perform multiple tasks.

4.1.4. The next step is to lay down a film mask which is an image of the circuitry required. This is usually silked screen onto the copper with an automated silk screening machine. The panel size of most large automated machines is about a meter on a side. This means that for our four meter long board we will need four masks for each layer. Running the kapton roll through the automatic screening equipment will require four passes. The first pass will screen panels one, five etc. The second pass (after a change of masks) will screen panels two, six, etc. The registration is determined precisely by the indexing

holes. All of the chemistry used in normal printed circuit technology is applicable at this time. The panels are etched, drilled and sent to a roller laminator. Here again we rely on the indexing holes to register the individual layers to be laminated. The adhesive can be in sheet form or applied as a liquid. Again, the adhesive used must be able to survive the expected radiation environment anticipated at the SSC, and not contain impurities that would poison the krypton / argon ionizing liquid.

4.1.5. Finally, through plating techniques using exposed via's are used to inter-connect the various layers, and the outer layers are processed using standard chemistry and methods.

Signal Electrode Production
(960 Panels 774 x 3655)

Polyimide Dielectric
- Allied Apical (40 - 60 inch width)
- Dupont (60 inch widths)
- Rogers Corp. (24 inch - ?)

Copper Cladding
- Sheldahl Corp. (Vacuum deposotion 0.2 micron copper, 60 inch width)

Plate-up (Electro Deposition)
- Sheldahl Corp. (sub-contractor 15 - 17 micron (1/2 oz copper))

Image
- Shelldahl Corp.(1000 X 5000 panel size)

Etch Line
- Sheldahl Corp. (parallel lines 18 inch and 24 inch)

Adhesive
- Dupont Corp.
- Sheldahl Corp. 3P

Lamination
- Sheldahl Corp. (roll to roll)

Silk Screen
- Sheldahl Corp. (registration)

Internal Connections
- Sheldahl Corp. (printed through hole)

Connectors
- AMP (Crimp-on connectors)