2615 H1d

Noble Liquid Calorimeter Inner Barrel Cryostat Design Concept

26 May 1993

Kim Barnstable
Martin Marietta Astronautics Group
Science Systems

Topics of Discussion

- Design Requirements
- Calorimeter Overview
- Barrel Cryostat Nomenclature
- Vessel Wall Sizing
- Material Selection Rationale
- EM and Hadronic Module Configurations
- Thermal Effects
- Vacuum Lines and Liquid Krypton Supply
- Major Cryostat Components
- Assembly Scenario

Inner Barrel Cryostat Design Requirements

- ASME Section VIII, Division 2
  - Weld joint (AD400)
  - Base material (Section IX QW-403 & QW-422)
  - Filler material (Section IX QW-404 & QW-432)
  - Vessel wall thickness (Section VIII, Division 2, Article D-3)
  - Reinforcement fo vessel openings (Section VIII, Division 2, Article D-5)
  - Flange thickness (Section VIII, Division 2, Appendix 3)

- Pressure
  - .10 MPa (15 psid) vacuum pressure
  - .16 MPa (23 psid) Head
  - .07 MPA (10 psid) Operating overpressure
  - .05 MPa (7 psid) Relief valve actuating pressure
    .38 MPa (55 psid)

- Deflection
  - Section VIII, Division 2 Article AD-310, AD-340 & AD-360 (Min. thickness of cylindrical and conic shells under external pressure and axial compression)
  - Stress requirements (ASME Section VIII, Division 2, Article 4-1 Appendix 4
  - Finite Element Analysis (walls sized by stress or deflection)

- Loads
  - EM 63.5 Mg
  - Inner Hadronic 162 Mg
  - Outer Hadronic 174 Mg

- Thermal
  - No local boiling of ionization medium
  - Uniform ionization medium temperature of 120°K
  - No more than 1% density variation within the ionization medium

Noble Liquid Calorimeter Overview

All dimensions are in mm.

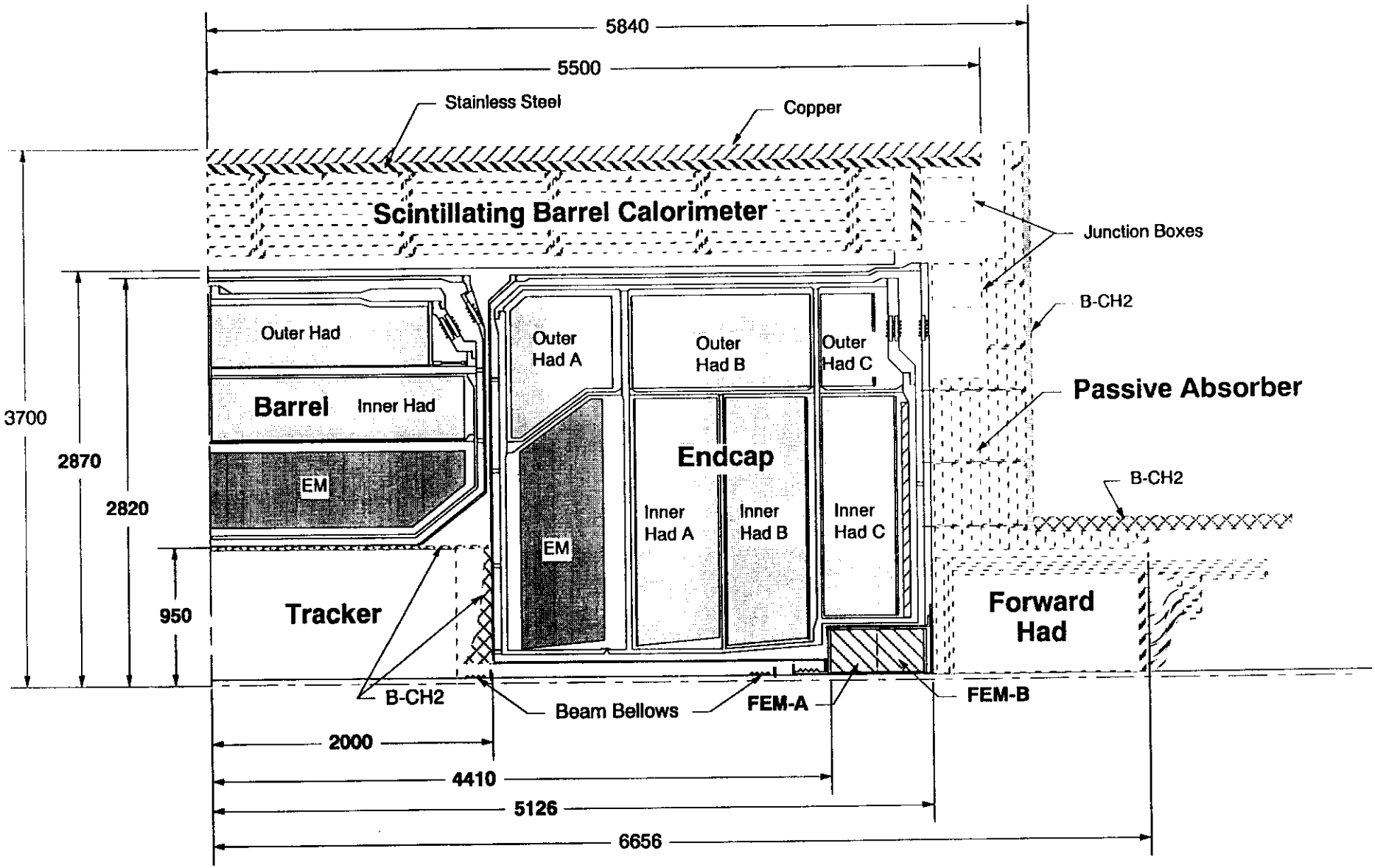

Barnstable: Overview:930426
3/15/93BarStk.Cold.Cu/Warm.Cu
3/15/93NdcpStk.Cold

Noble Liquid Calorimeter Barrel Cryostat

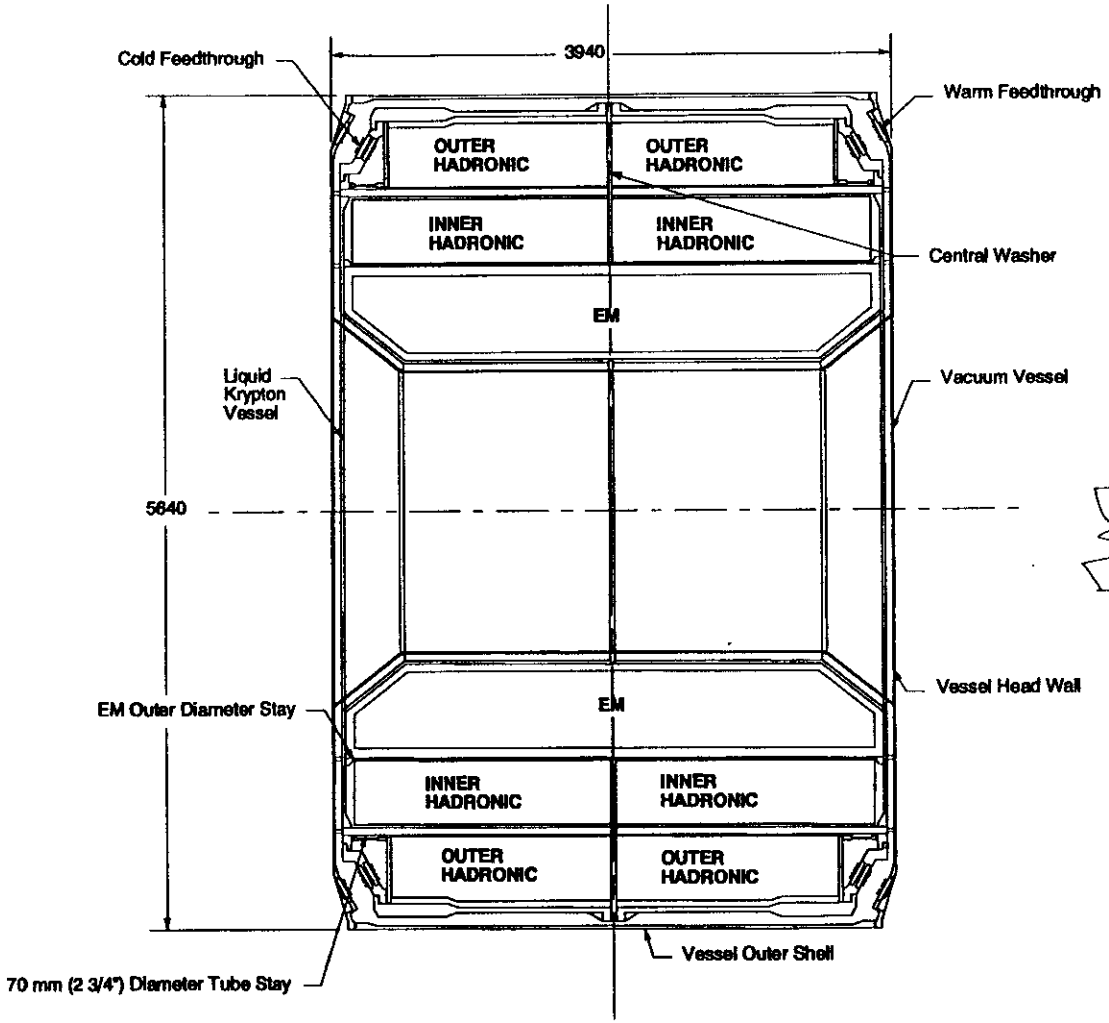

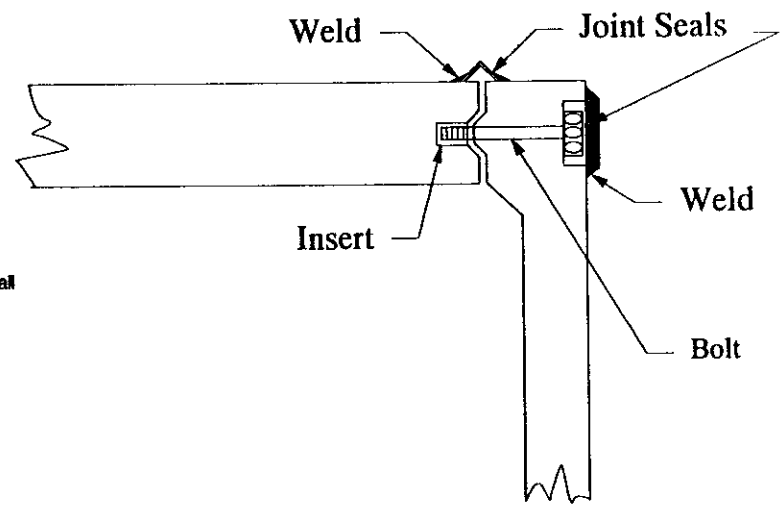

Barnstable: Overview2: 930427

Vessel Wall Sizing

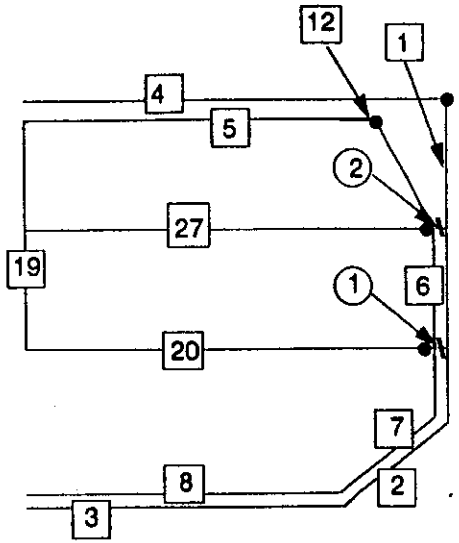

Wall ID	Thickness (mm)	Wall ID	Thickness (mm)
1	12	7	22
2	11	8	22
3	11	12	89
4	23	19	34
5	23	20	10
6	26	27	10

Notes:

- □ = wall ID
- ⫲ = thermal bumper
- ○ = thermal bumper ID
- ● = bolted joint

Feature	Cryostat Performance Ratio		
	Aluminum 5083 SB-209	Steel 304L SA-240	Titanium Grade 3
Material Properties			
ρ (g / cm^2)	2.70	7.92	4.54
λ(cm)	39.407	16.654	27.511
X_o(cm)	8.893	1.747	3.562
S_m (10^3 psi @ 100°F) *	12	16.7	21.7
E (10^6 psi @ 70°F)	10.3	28.3	15.5
Shells			
t / t_{Al}(Stress: $S_m^{1.0}$)	1	0.72	0.55
$(t / t_{Al})(\lambda_{Al} / \lambda)$	1	1.70	0.79
$(t / t_{Al})(X_{oAl} / X_o)$	1	3.66	1.38
t / t_{Al}(External Pressure / Stability: $E^{1/3}$)	1	0.72	0.87
$(t / t_{Al})(\lambda_{Al} / \lambda)$	1	1.70	2.07
$(t / t_{Al})(X_{oAl} / X_o)$	1	3.65	4.45
Heads			
t / t_{Al}(Bending: $S_m^{1/2}$)	1	0.85	0.74
$(t / t_{Al})(\lambda_{Al} / \lambda)$	1	2.01	1.76
$(t / t_{Al})(X_{oAl} / X_o)$	1	4.32	3.79
t / t_{Al}(Deflection: $E^{1/3}$)	1	0.72	0.87
$(t / t_{Al})(\lambda_{Al} / \lambda)$	1	1.70	2.07
$(t / t_{Al})(X_{oAl} / X_o)$	1	3.65	4.45
Washers			
t / t_{Al}(Radial Compression / Stability: $E^{1/2}$)	1	0.60	0.82
$(t / t_{Al})(\lambda_{Al} / \lambda)$	1	1.43	1.93
$(t / t_{Al})(X_{oAl} / X_o)$	1	3.07	4.15

* ASME Section VIII, Division 2, Membrane Stress Intensity

Barrel EM Module Configuration

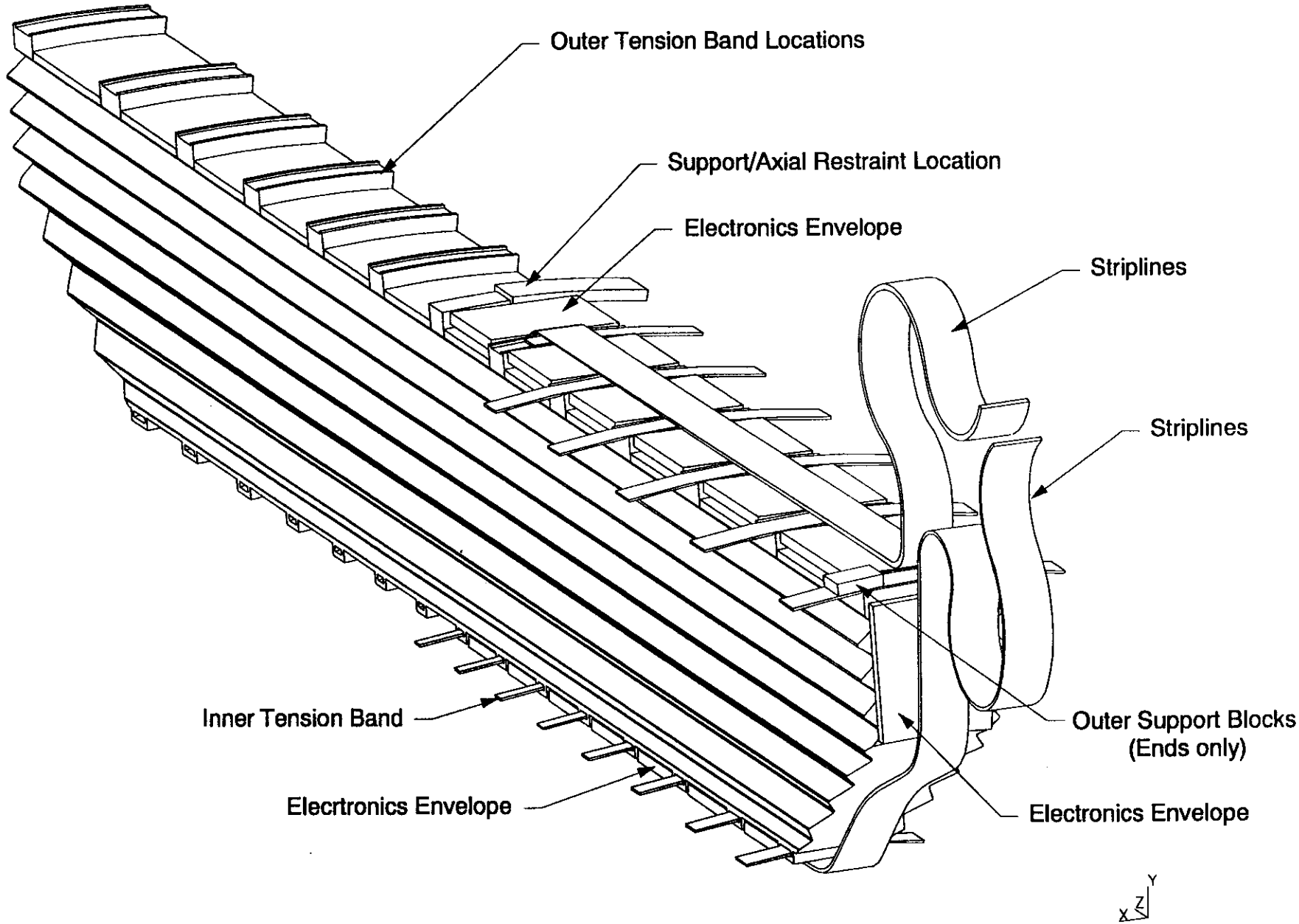

Barrel Hadronic Module

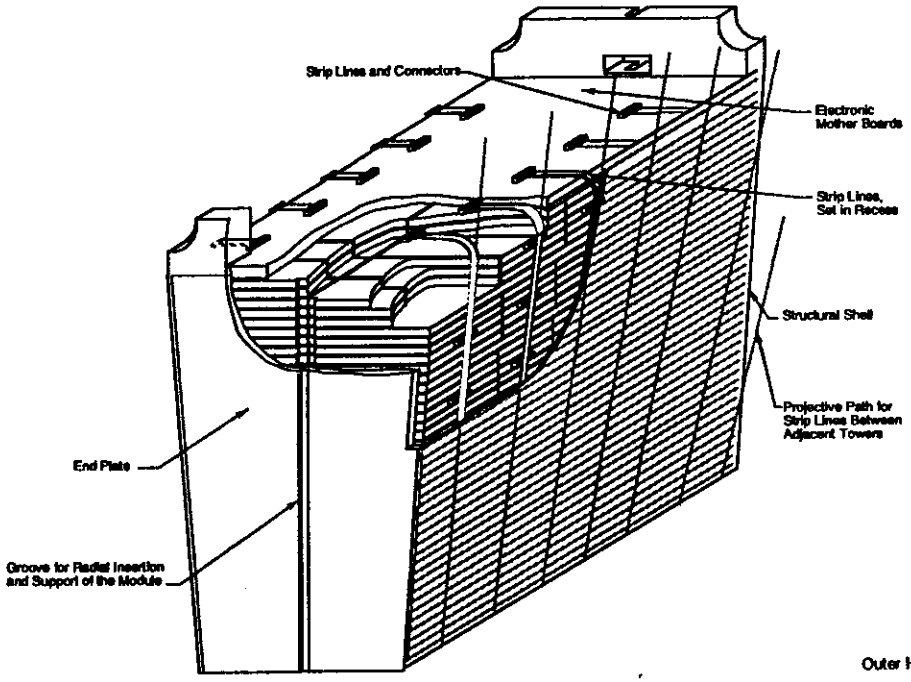

Barrel End View

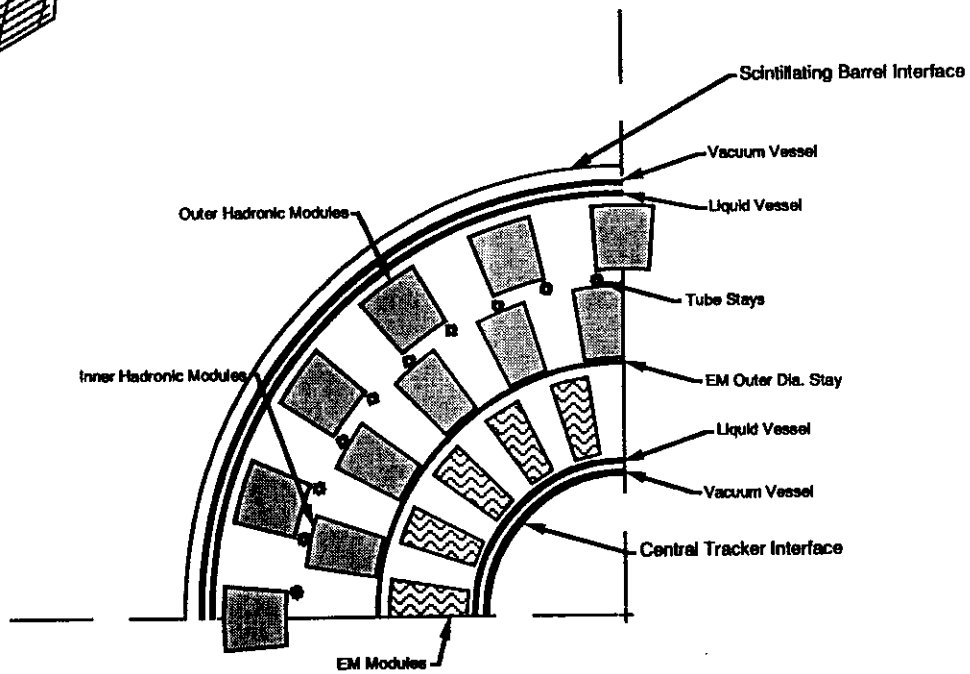

Barrel calorimeter	Cold (120°K)		Ambient (293°K)	
	Depth, mm	Radius mm	Depth, mm	Radius mm
Cryostat Inner Radius	950	950.00	950	950.00
Cryostat Vessels				
Vacuum wall	11	961.00	11	961.00
Vacuum Space	50	1011.00	53.44	1014.44
Krypton Wall	22	1033.00	22.07	1036.51
Stay	10	1680.40	10.03	1686.11
Stay	25.4	2189.41	25.5	2196.85
Cryostat Vessels				
Krypton Vessel	35	2709.60	35.12	2718.81
Flange	48	2757.60	48.16	2766.97
Vacuum space	39.4	2797.00	30.03	2797.00
Vacuum Vessel	23	2820.00	23	2820.00
Note : Ambient dimensions based on % $\Delta L/L = 0.34$(Reference 2)				

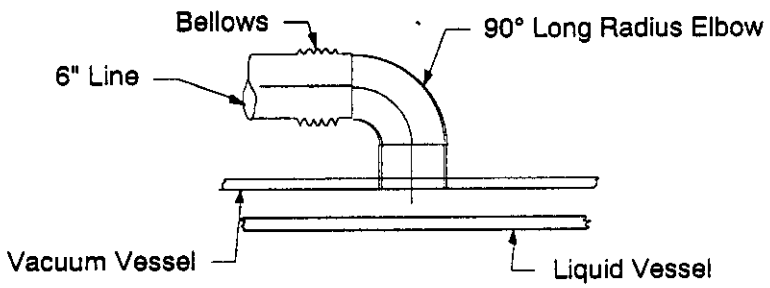

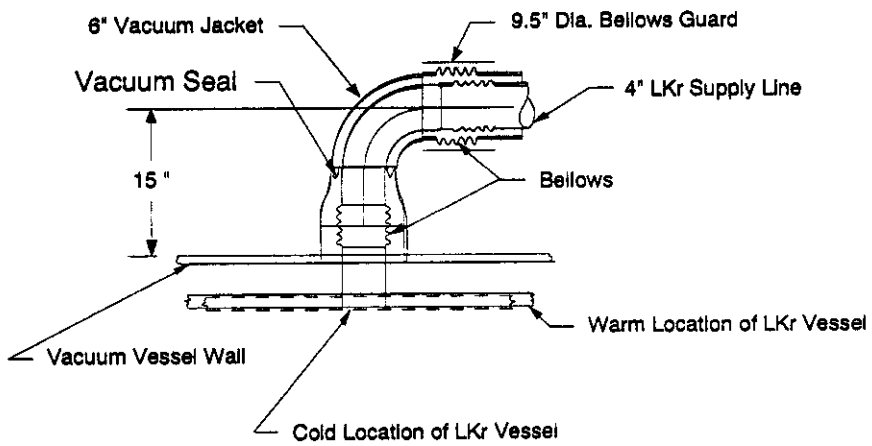

Liquid Vessel Assemblies

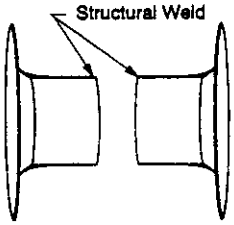

(a) Liquid Vessel Inside Diameter Assembly Sections (Total wt =±3.4 Mg)

(d) Outer Hadronic Module Support Washer Assembly (Total wt=±1 Mg)

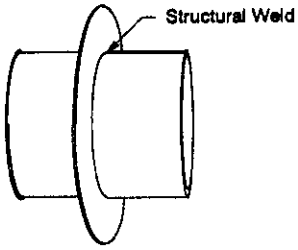

(b) EM Outside Diameter Stay & Central Washer Assembly (Total wt=±2.5 Mg)

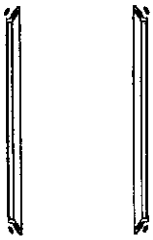

(e) Liquid Vessel Feedthrough Conic Sections With Warm & Cold Feedthroughs (Total wt=±3.0 Mg per Conic Section)

(c) Inner Hadronic Module Outside Diameter Tube Stay

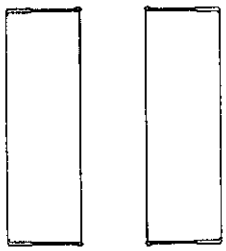

(f) Liquid Vessel Outside Diameter Shell Assemblies (Total wt =±4.3 Mg per Side)

Vacuum Vessel Assemblies

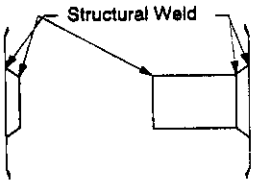

(g) Vacuum Vessel Inside Diameter & Head Assembly

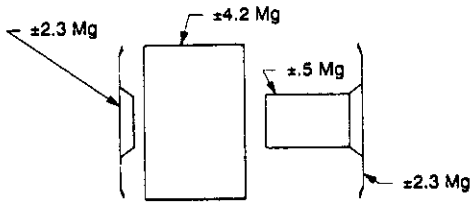

(i) Vacuum Vessel Assembly (Total wt=±9.3 Mg)

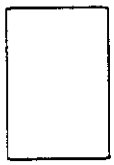

(h) Vacuum Vessel Outside Diameter Shell Assembly
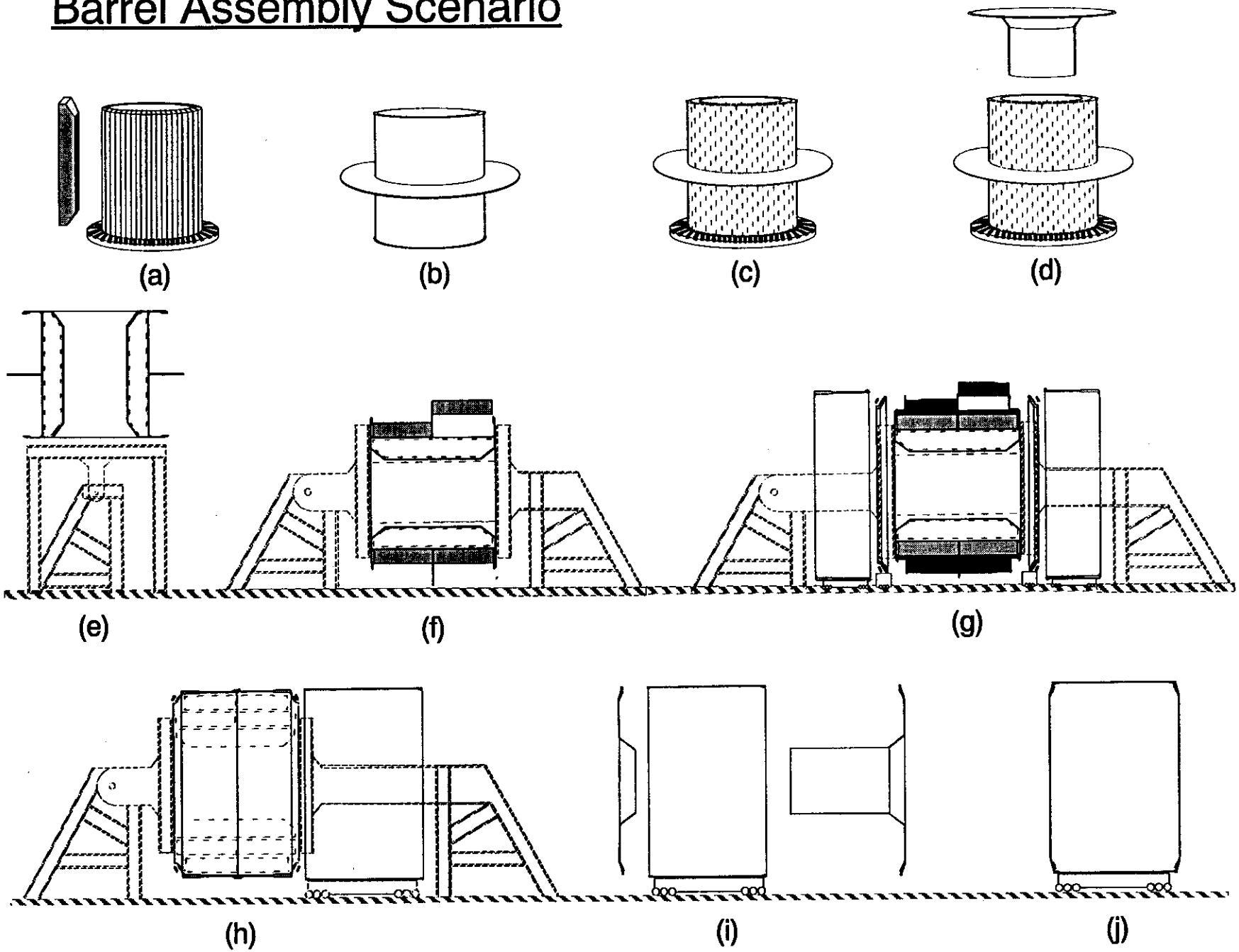
Barrel Assembly Scenario