OVERVIEW

GEM CALORIMETER ENGINEERING

Lyle Mason
May 25,1993

Brookhaven National Laboratory
Martin Marietta Astronautics Group, Science Systems
Oak Ridge National Laboratory
University of Washington
University of Rochester
Los Alamos National Laboratory

Requirements

- Physics Goals and Objectives Constitute the Key "Functional Requirements" that Drive the Design Concept
- Additional "Derived Requirements" Assure Structural Integrity,Maintainability, Reliability, Endurance, and Safety
- Requirements for Each Subsystem are Documented in Subsystem Specifications
- Interfaces Between Subsystems are Identified in the Subsystem Specifications with Details Defined in Interface Control Documents (ICD)

ENGINEERING FUNCTION AND DESCRIPTION:

Design Requirements:

Steel Structure:	American Institute of Steel Construction (AISC)
Vessels:	ASME Boiler and Pressure Vessel Code (ASME Code)
Piping:	American National Standards Institute B31.5 (ASME/ANSI B31.5)
Modules:	Mil Hdk 5 (for material properties), Aerospace Hdk (by Bruhn and etc.)
Earth Quake:	Comanche Peaks Ground Motions

Central Detector Support(CDS):

- Static Support and Position Alignment
- Dynamic Stability
- Accommodate Access to Tracker

Calorimeter:

- Scintillating Barrel
- Noble Liquid Barrel, Endcap and Forward E M
- Passive Endcap and Scintillating Forward Hadronic
- Structural Support for Central Tracker

Vacuum System:

- Thermal Installation and Noble Liquid System Cleaning

Cryogenics:

- Liquid Nitrogen System for Heat Removal and Argon Conditioning
- Liquid Argon System for Krypton Thermal Conditioning
- Noble Liquid Supply and Storage
- Purification of Noble Liquids

Electronics and Controls:

- Interfaces, Routing, and Operation

GEM DETECTOR PARAMETERS

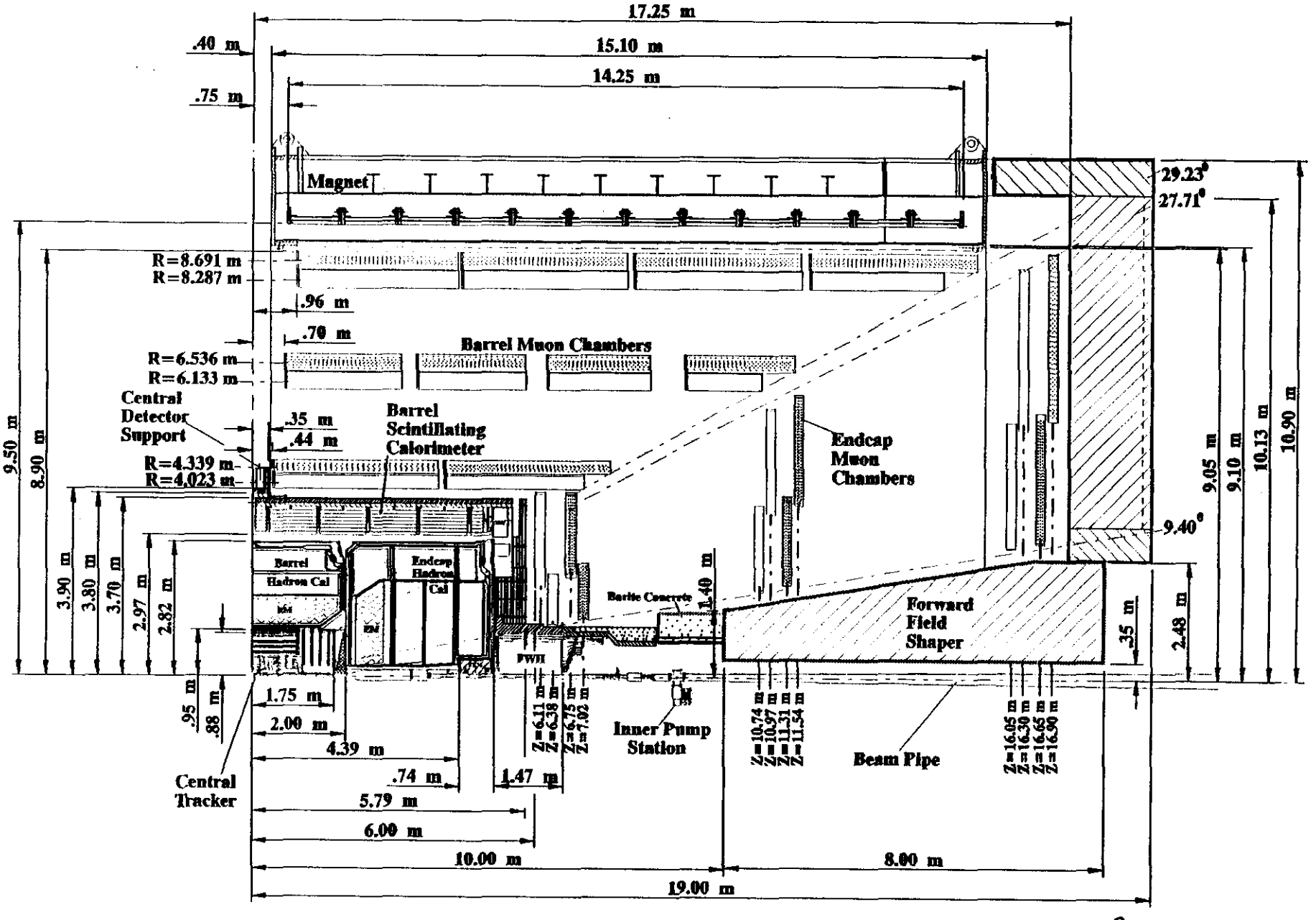

 (DETpara/930426/ZC)

Central Detector Support

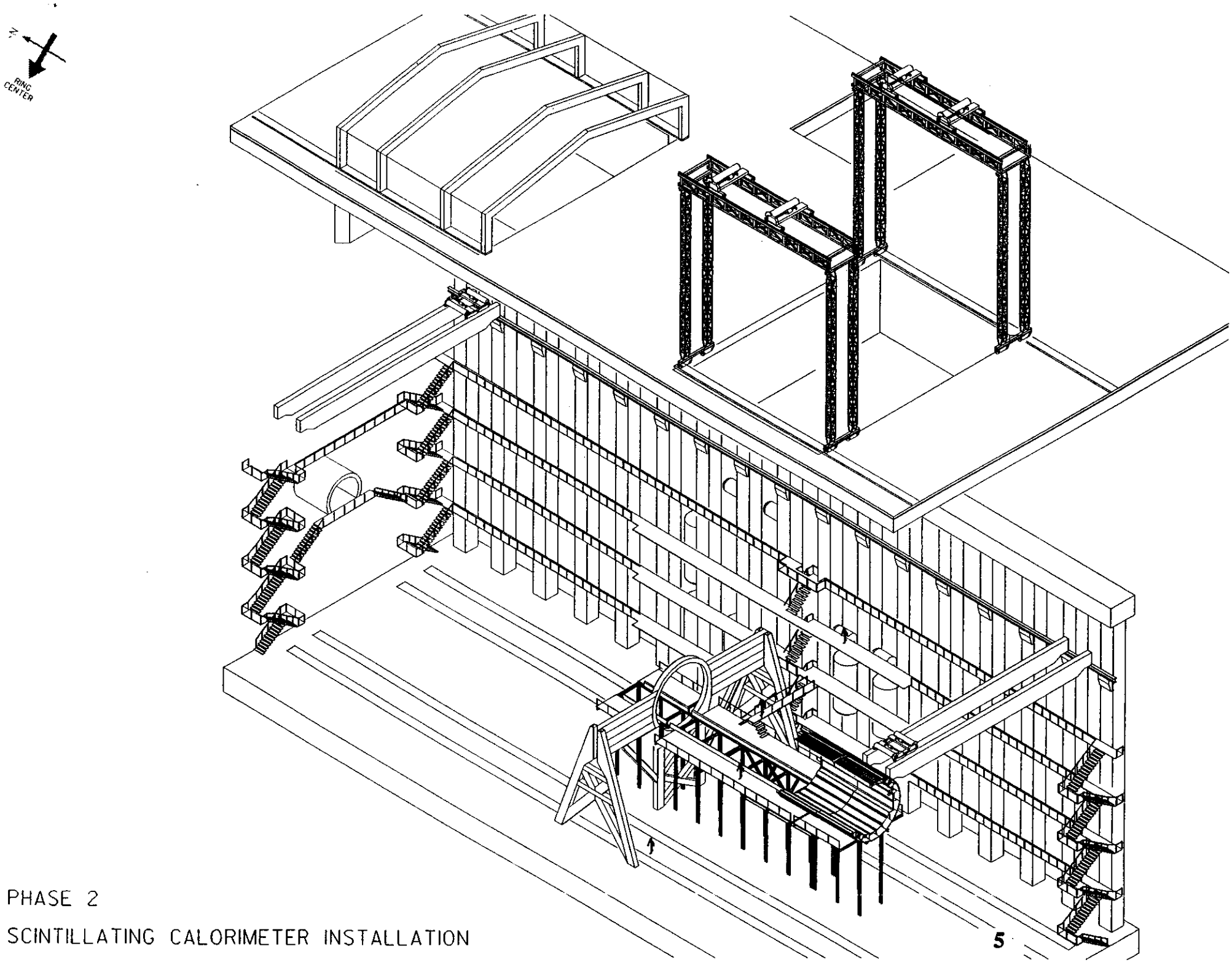

PHASE 2

SCINTILLATING CALORIMETER INSTALLATION

Central Detector Support:

Welded Structure: Completely of Stainless steel

Static Design Criteria

Maximum Allowable Stress: 50% of Yield Strength for Chosen Material
Symmetric Load with all Calorimeters Installed
Asymmetric Load: One Liquid Endcap Calorimeter Removed

Dynamic Design Criteria:

Camanche Peak Steam Generation Plant: Shutdown Criteria
Symmetric and Asymmetric Loads
Maximum Stress: 60% of Chosen Material's Ultimate Strength

Static Stability Design Criteria:

Minimum Buckling Eigenvalue of Ten Times the Applied Loads
Symmetric and Asymmetric Loading Conditions

Central Detector Support:

CDS Analyses Results:

Maximum Von Mises Stress of 12.5 ksi Symmetric Static Load Case

Maximum Von Mises Stress of 16.8 ksi Asymmetric Static Load Case

Maximum Von Mises Stress for Earthquake 35 ksi (Asymmetric or Symmetric Load Cases)

Maximum Buckling Eigenvalue Greater than 35

GEM Calorimeter

GEM Calorimeter

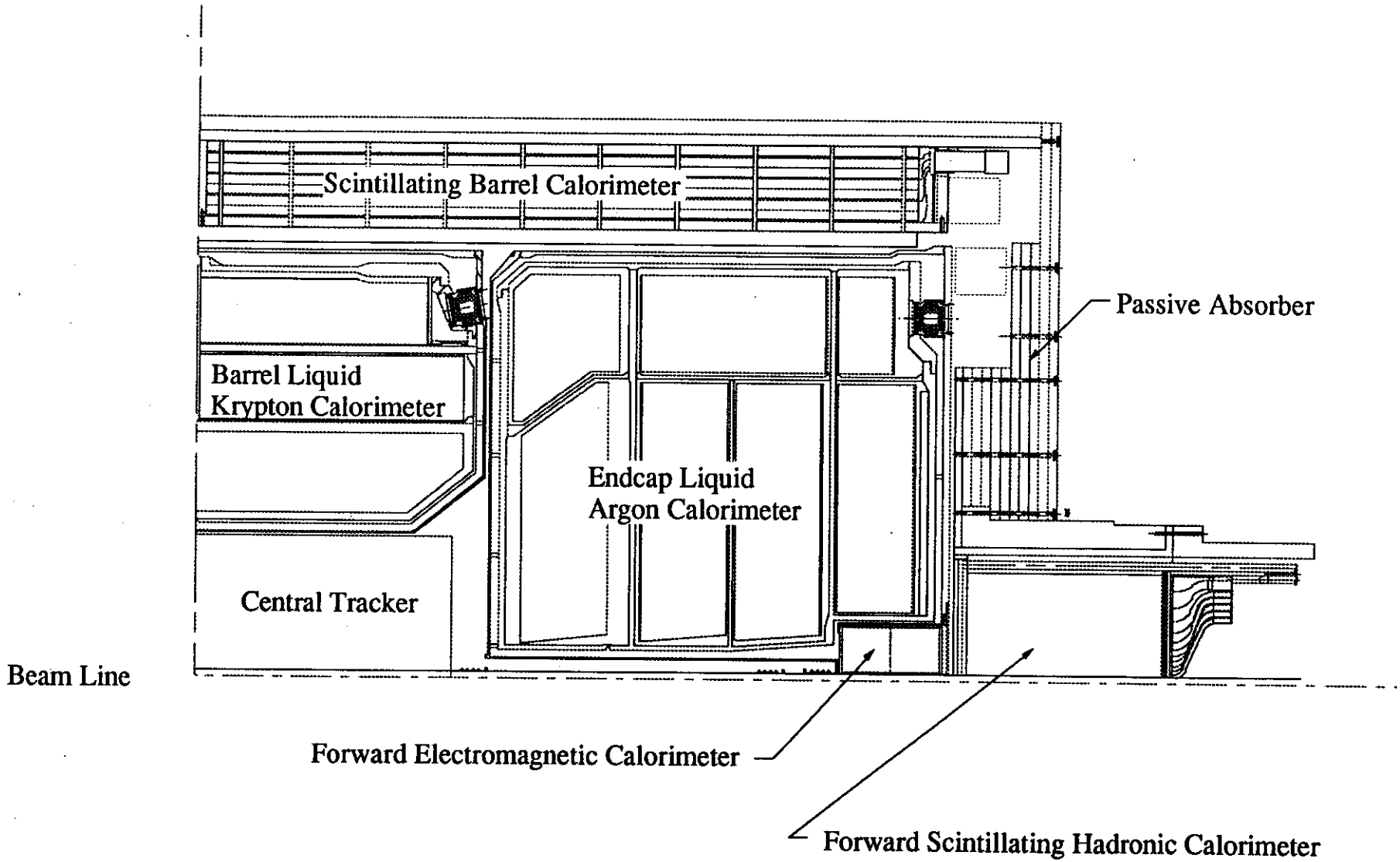

newft.ccad
LLMason

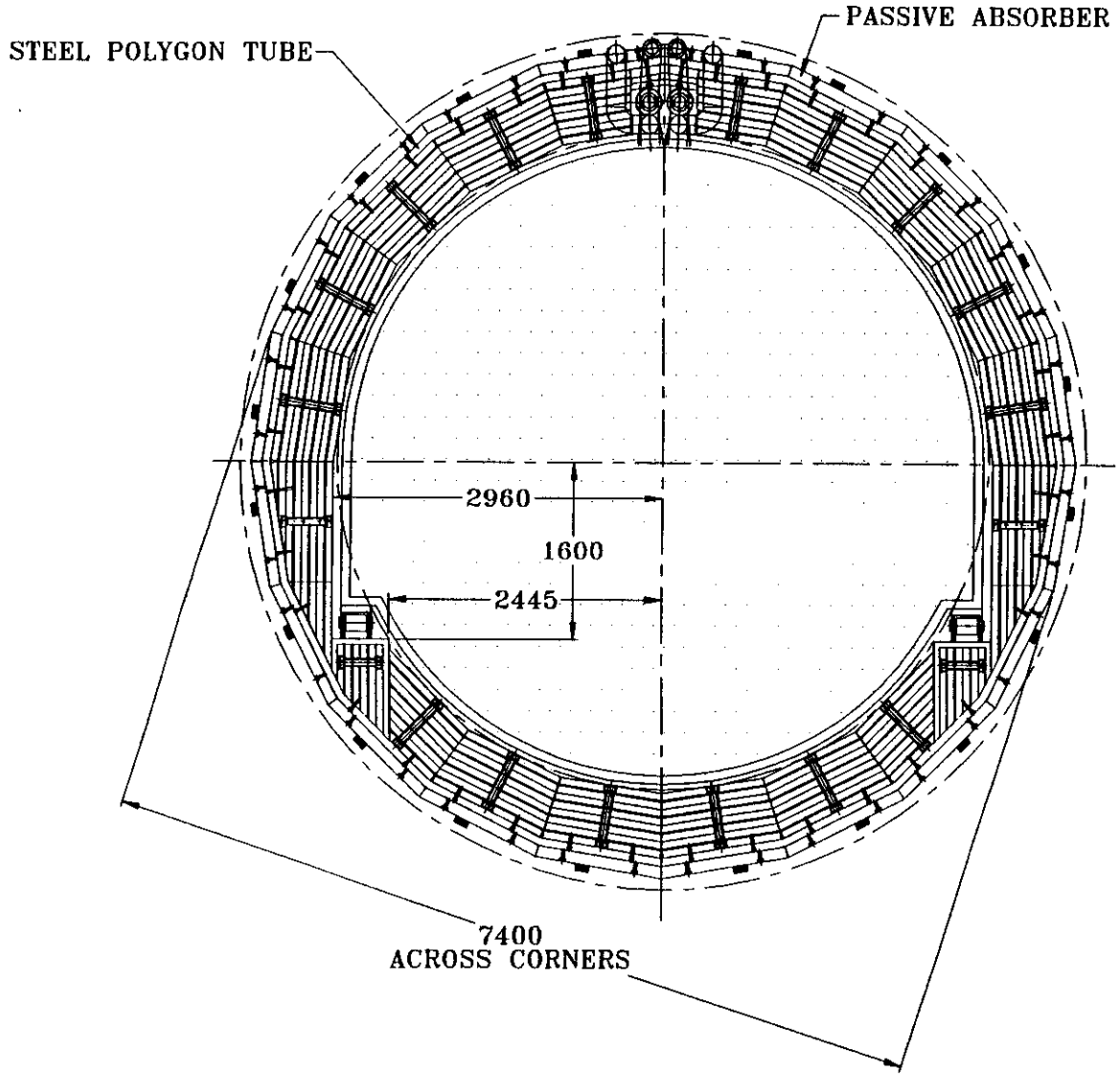

10

DIMENSIONS ARE IN MILLIMETERS UNLESS OTHERWISE SPECIFIED

TOLERANCES (Except As Specified)

OVER	UNDER	TOLERANCE
0	2.999	±0.15
3	5.999	±0.2
6	29.999	±0.5
30	119.999	±0.8
120	314.999	±1.2
315	999.999	±2
1000	1999.999	±3
2000	3999.999	±4
4000	7999.999	±5
ANGLES		±2

DO NOT SCALE DRAWING

DO NOT REVISE MANUALLY

ORIGINAL ISSUE

B.J. KINCAID 5/93
J.V. MOORE 5/93
B.H. SINGLETARY 5/93
H.J. RENNICH 5/93

MARTIN MARIETTA ENERGY SYSTEMS, INC.

GEM DETECTOR
BARREL SCINTILLATING CALORIMTER
MODULE ASSEMBLY

N/A

SCALE	ID	PLANT	SIZE	SHEET	REV
1=1	1240	ORNL	1000	1	0

X3E017048 A867

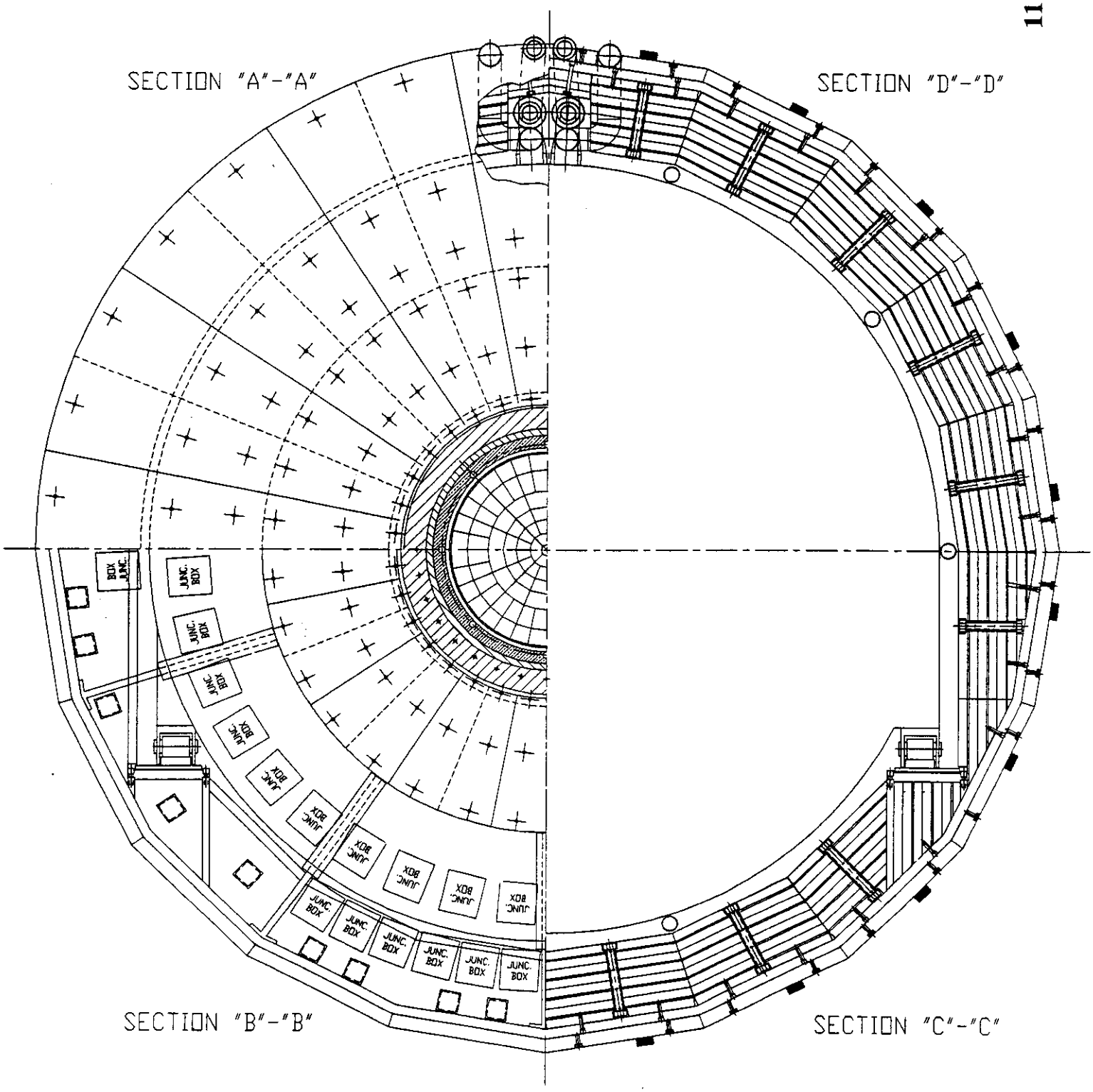
SECTION "A"-"A"
SECTION "D"-"D"
SECTION "B"-"B"
SECTION "C"-"C"
JUNC. BOX

Noble Liquid Calorimeter Overview

All dimensions are in mm.

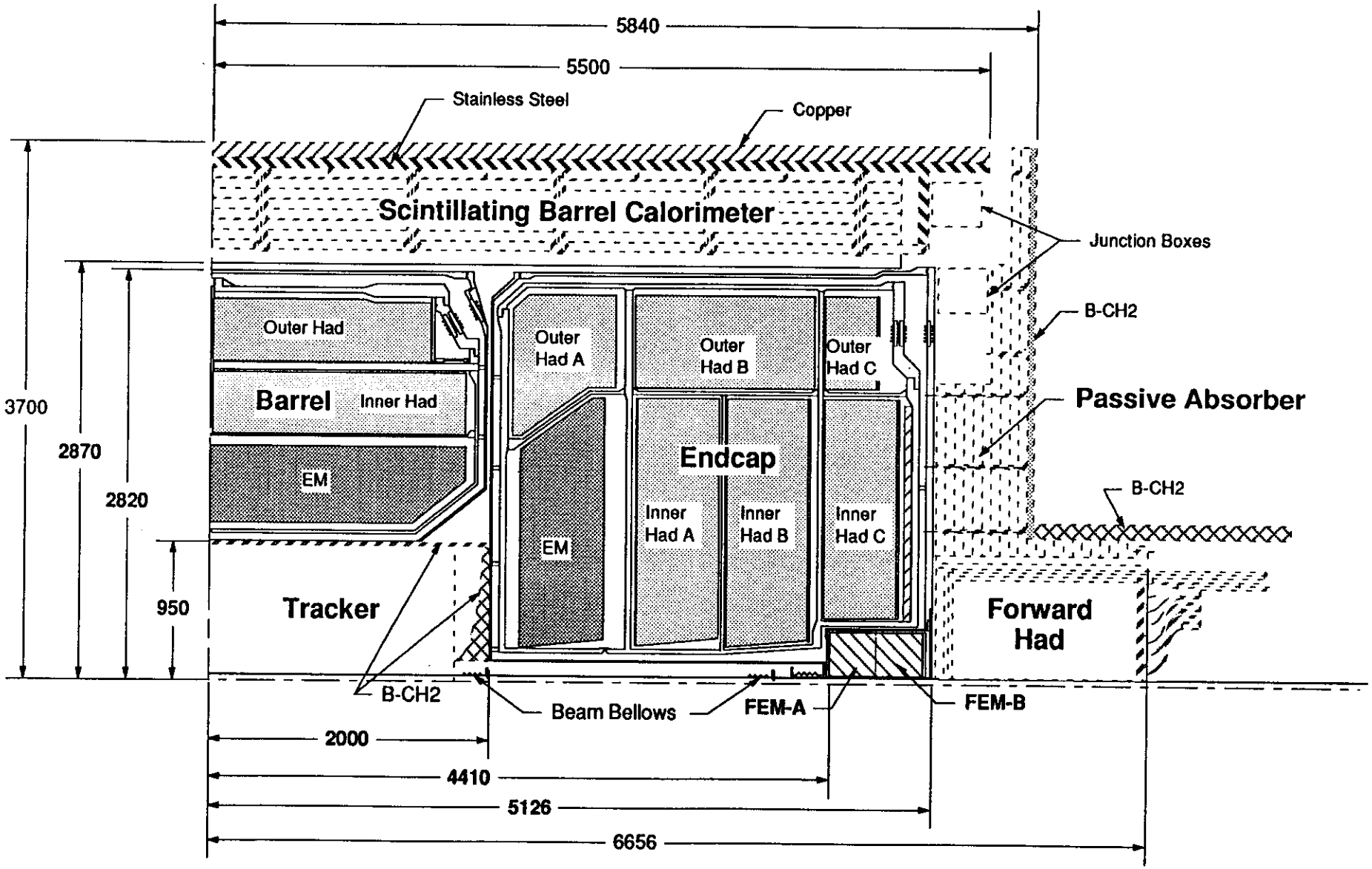

Barnstable: Overview:930426
3/15/93BarStk.Cold.Cu/Warm.Cu
3/15/93NdcpStk.Cold

Barrel Electromagnetic Module

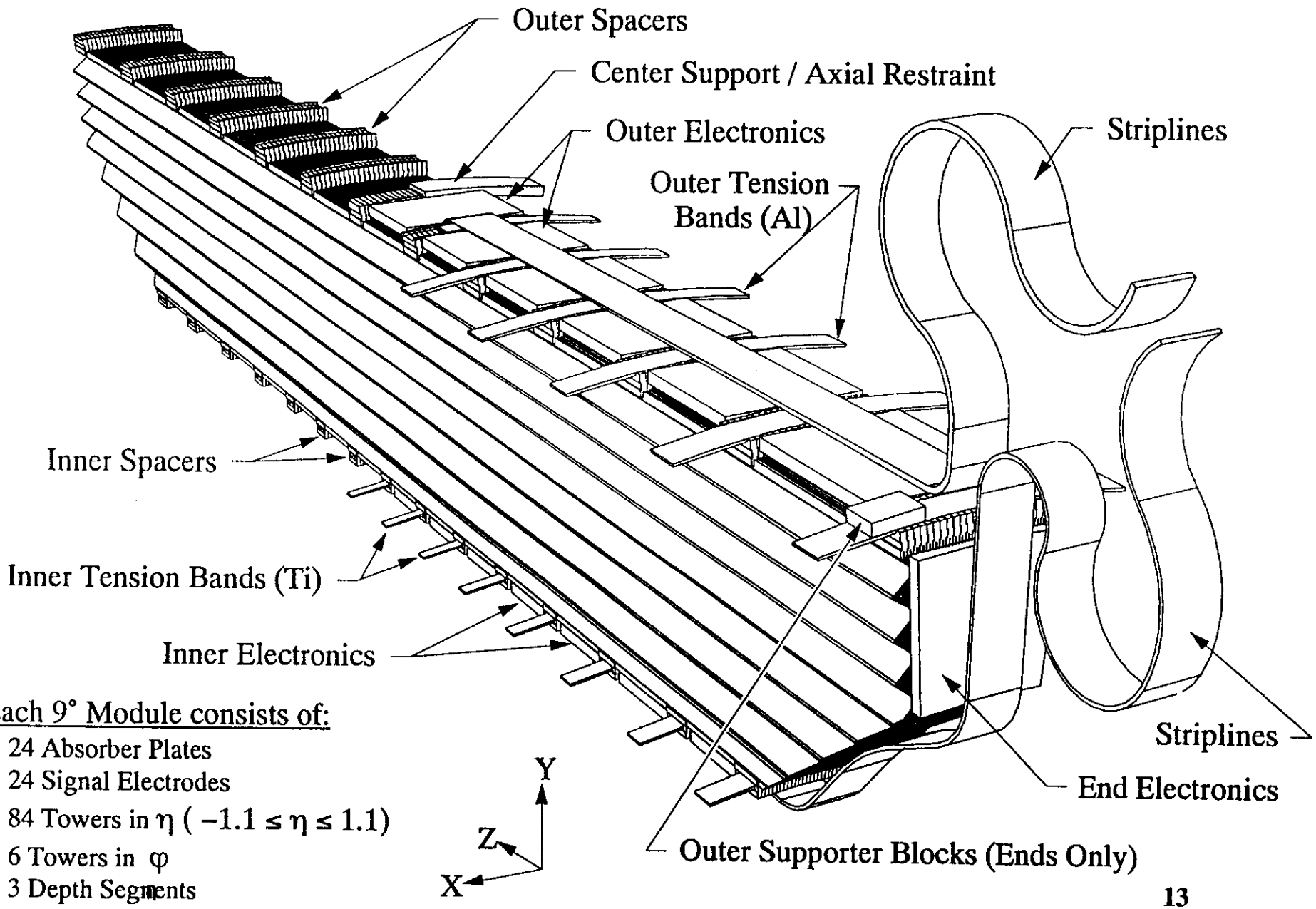

Each 9° Module consists of:

- 24 Absorber Plates
- 24 Signal Electrodes
- 84 Towers in η ($-1.1 \leq \eta \leq 1.1$)
- 6 Towers in φ
- 3 Depth Segments

Barrel EM Module End View

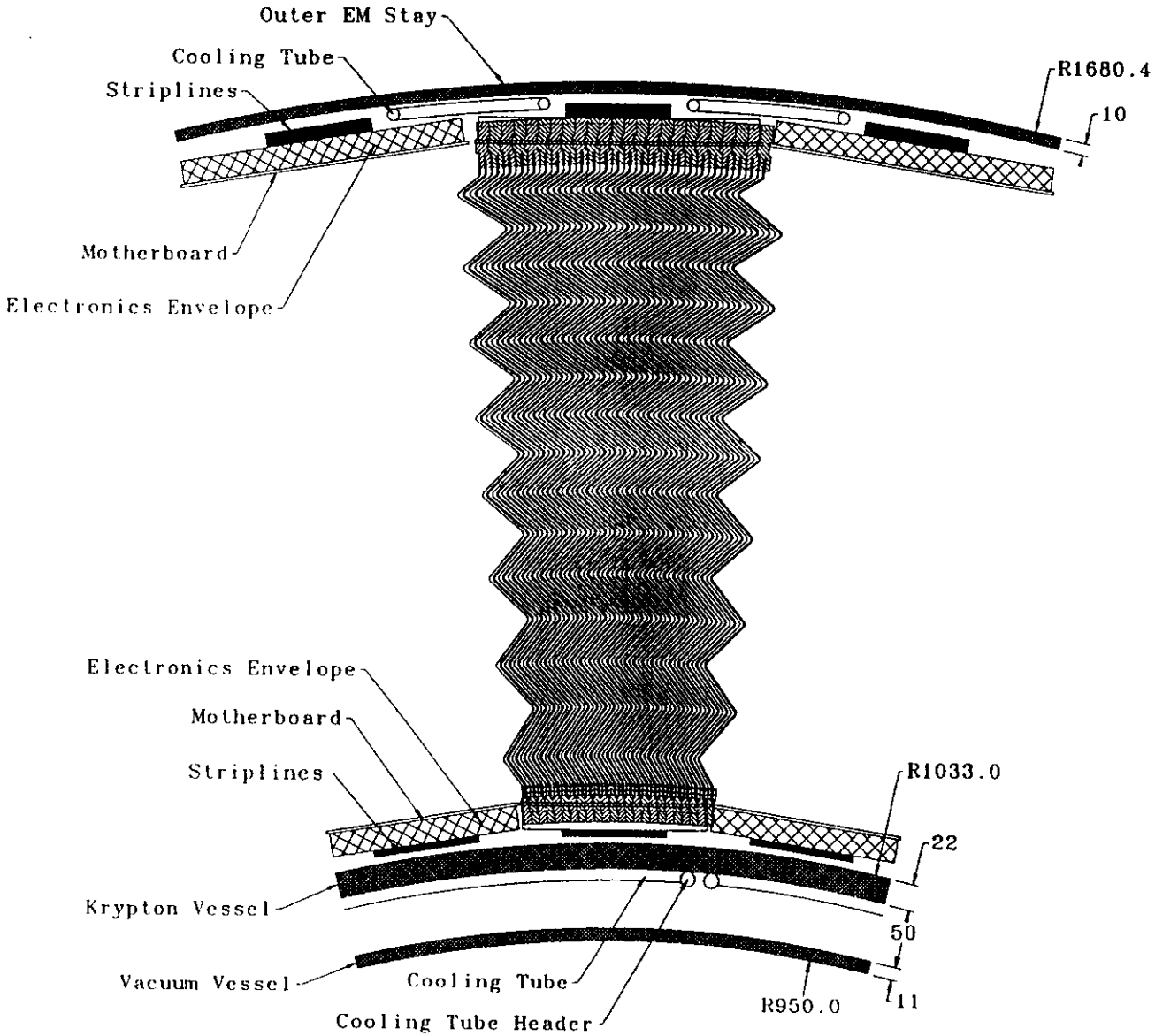

Zoom: z_section.gdr

Barrel Inner Hadronic Module (WBS 20.02.3.1)

6 Cells Depth
Seg. $\Delta\eta \times \Delta\varphi = 0.078 \times 0.078$
80 Modules Required
Wt.=2.1 Mg each

Each Module Contains
the following:
1-Top Ground Plate
1-Bottom Ground Plate
5-Internal Gnd Plates
24-Absorber Plates
6-Signal Electrodes
1-Structural Shell
2-End Plates
Lines and Electronics

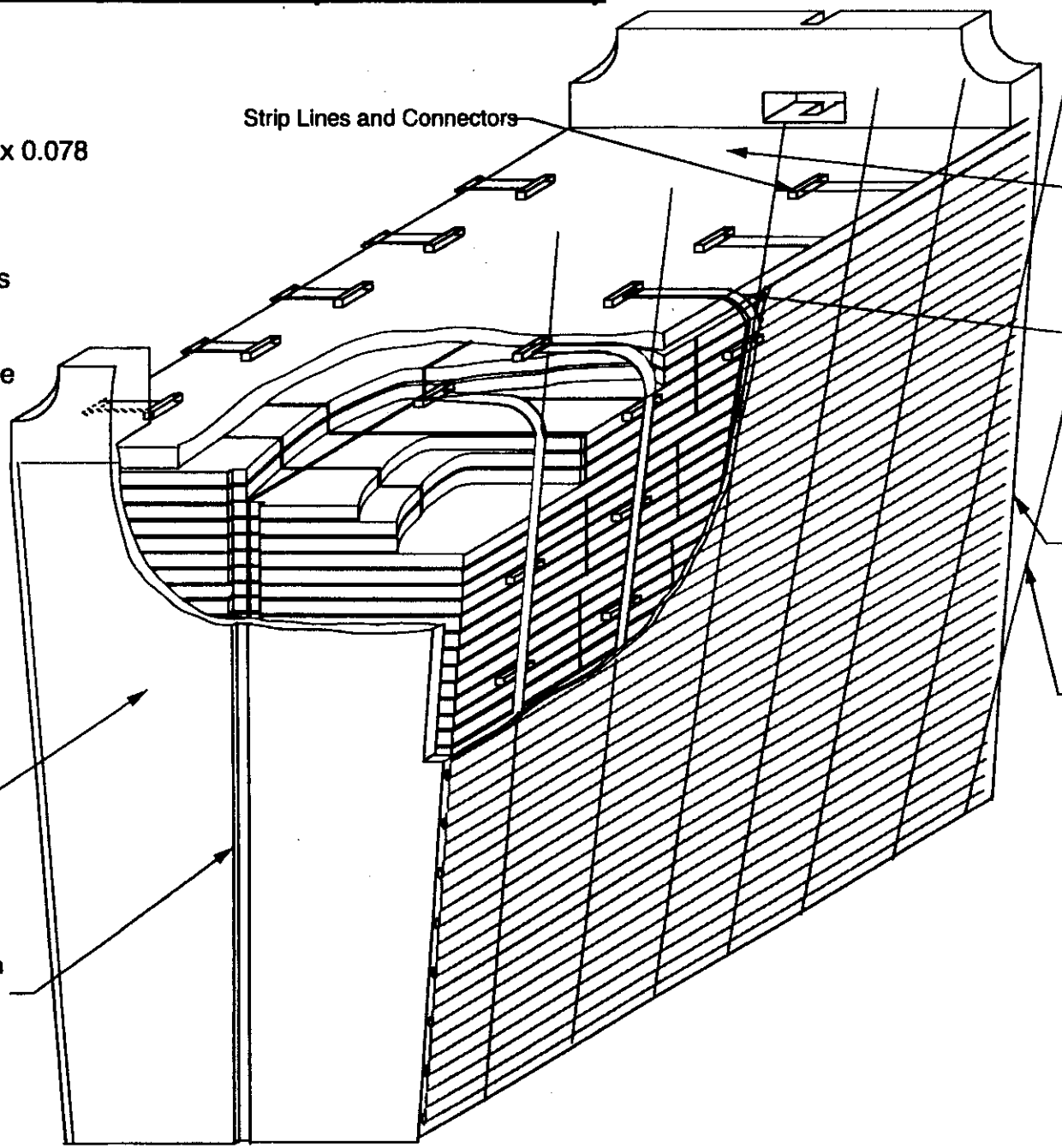

Barrel Inner Hadronic Module Signal Electrode

Signal Electrode Layup

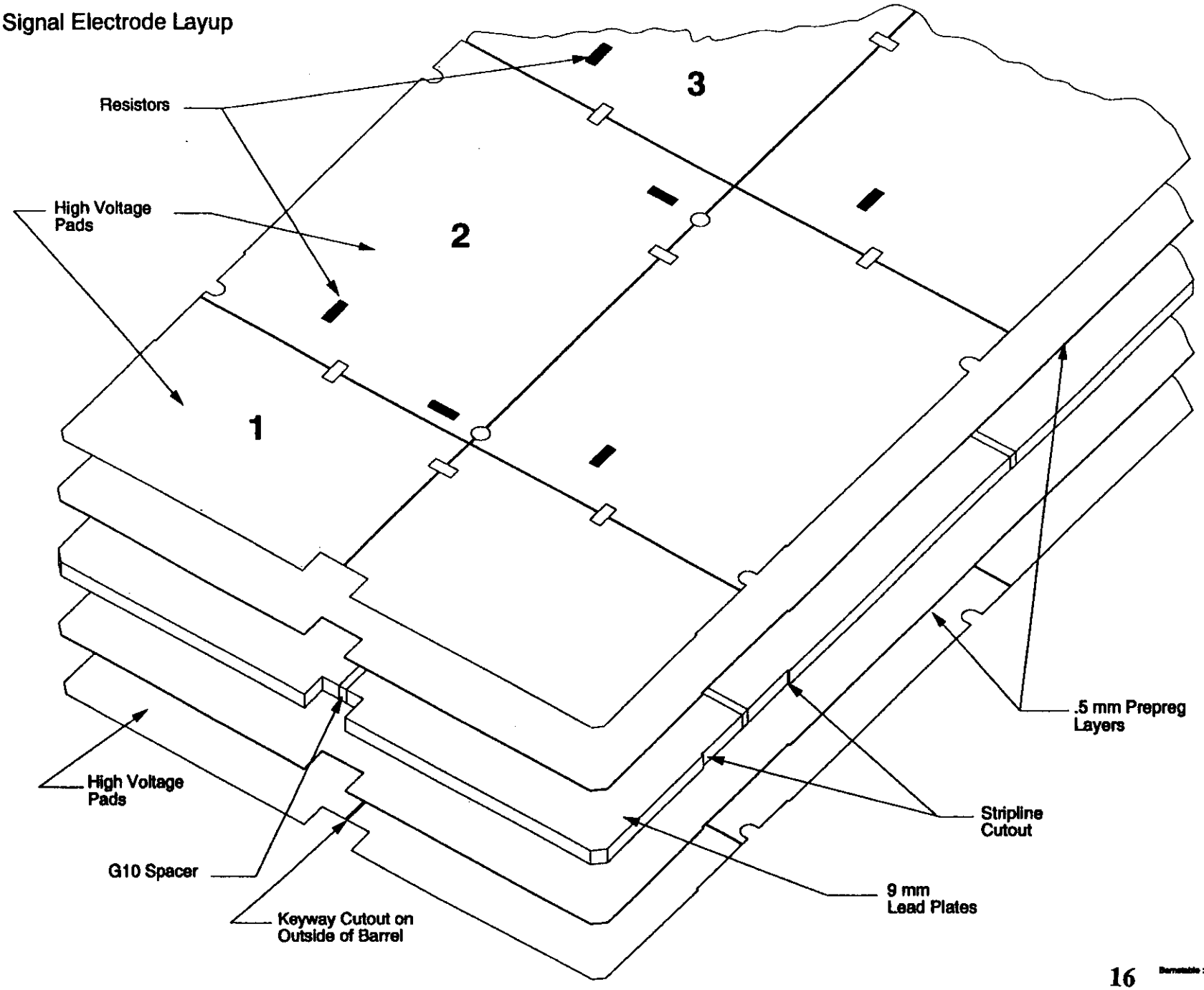

Noble Liquid Calorimeter Barrel Cryostat (WBS 20.02.4)

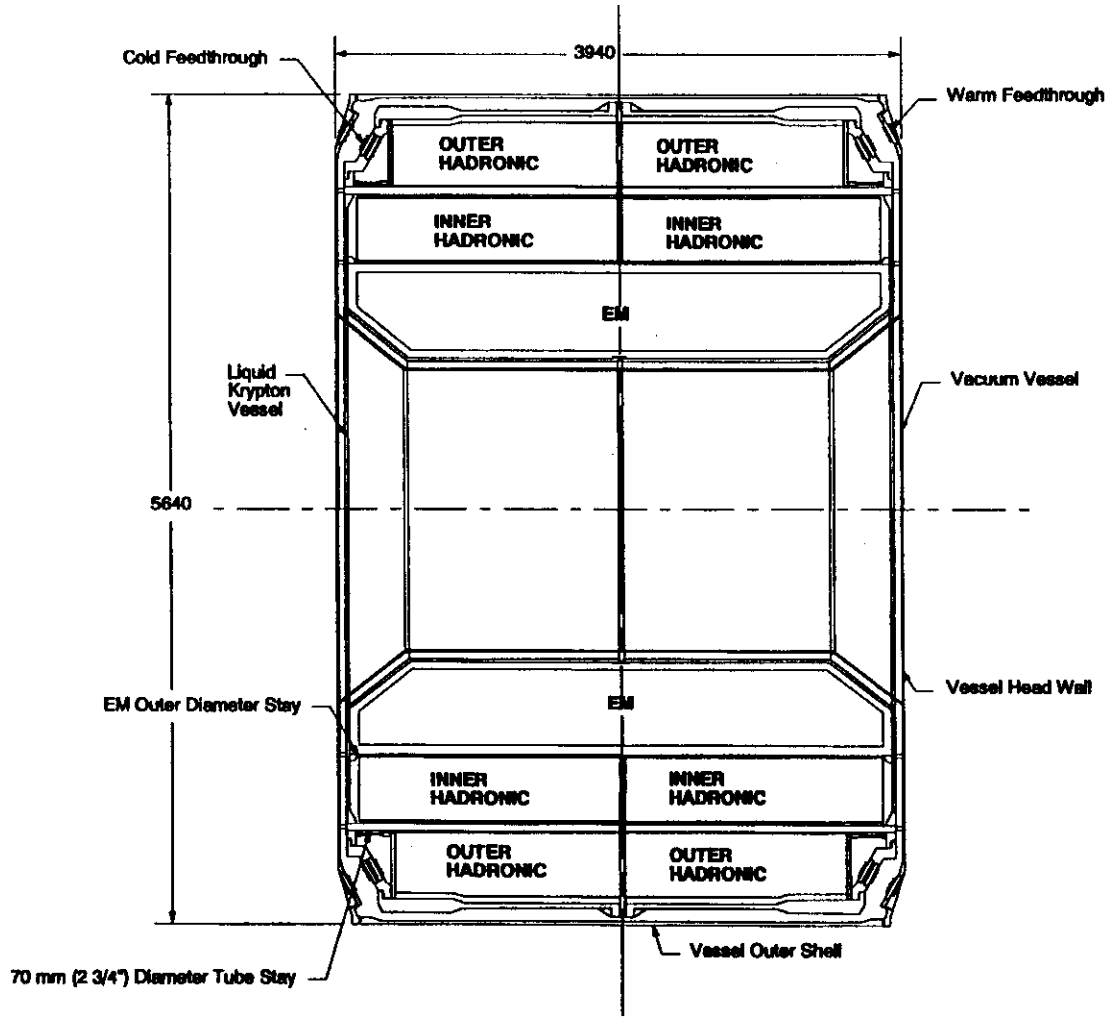

Cell Orientation in Modules

Segmentation ($\eta \times \varphi$)

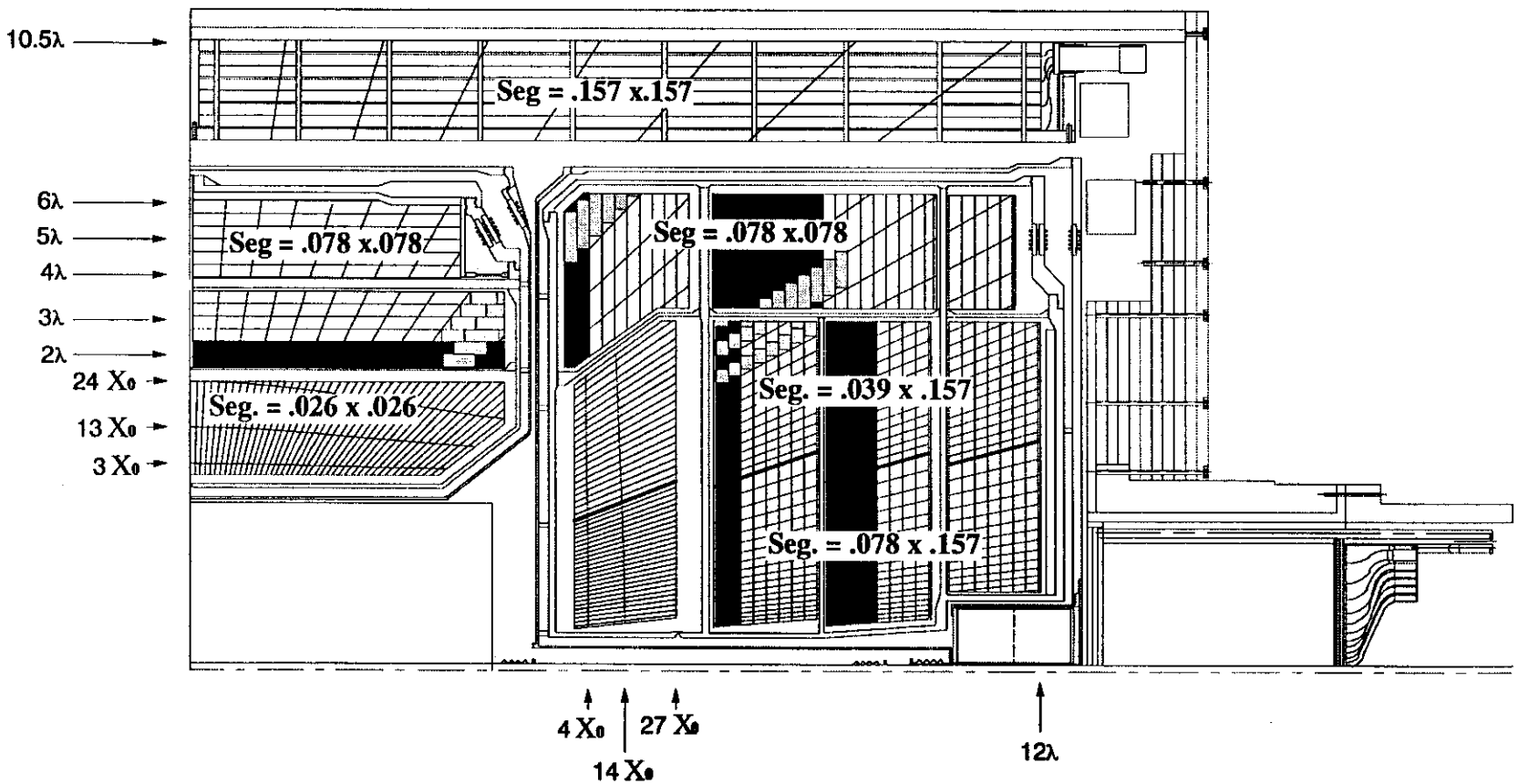

Barrel Calorimeter Segmentation

Segmentation ($\eta \times \varphi$)

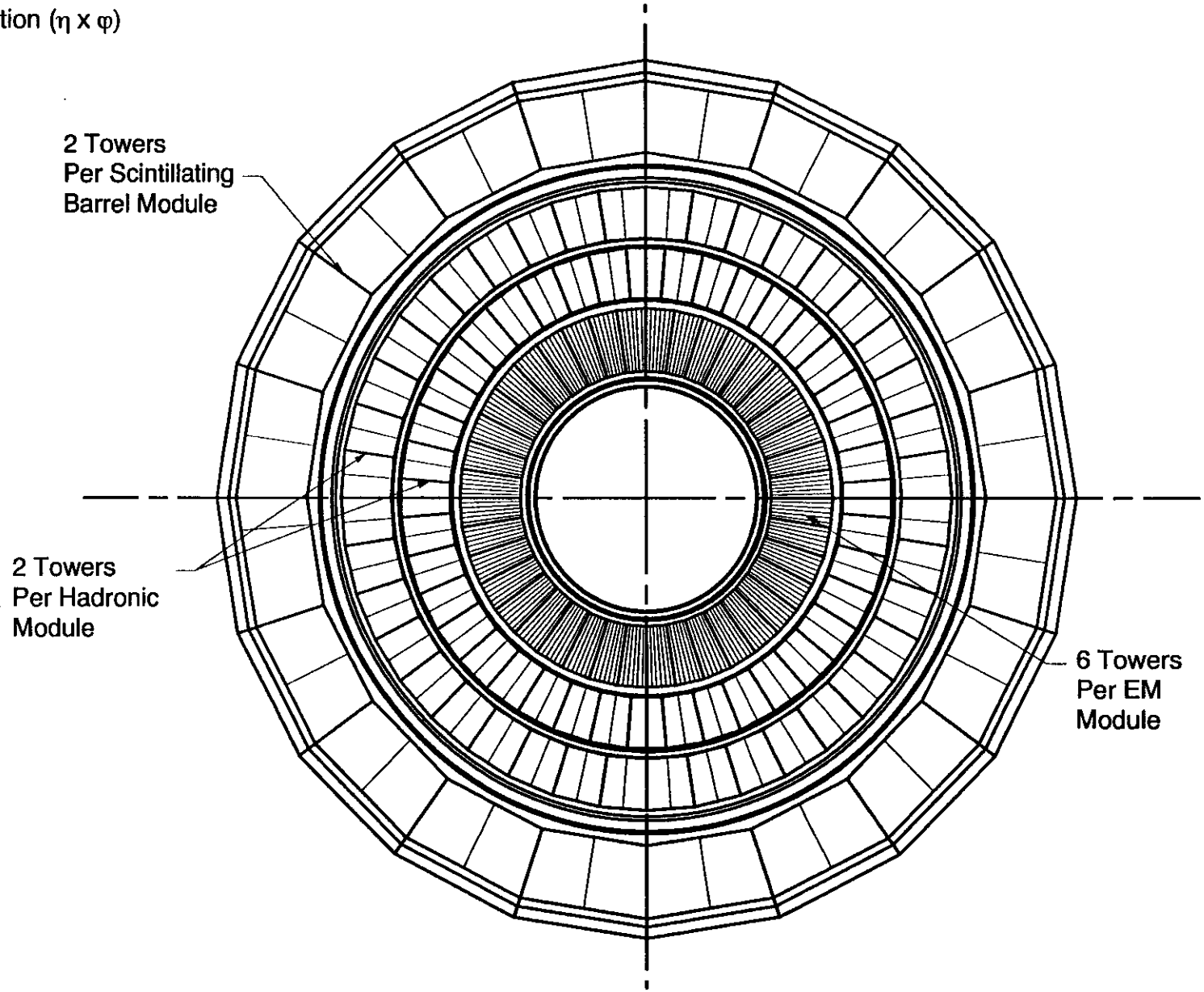

Barrel Feedthroughs

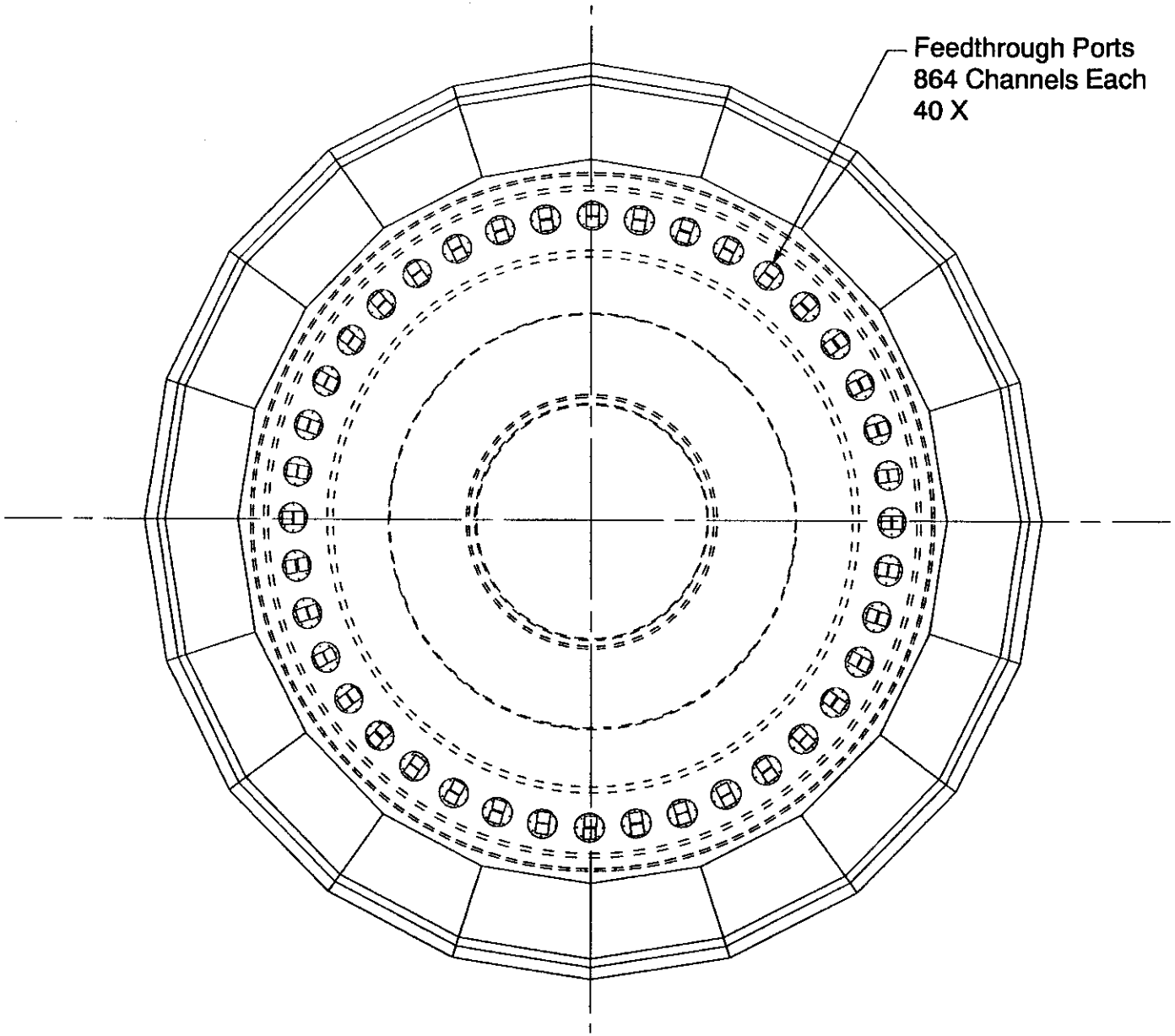

Electronic Feedthroughs and Internal Cooling Circuits

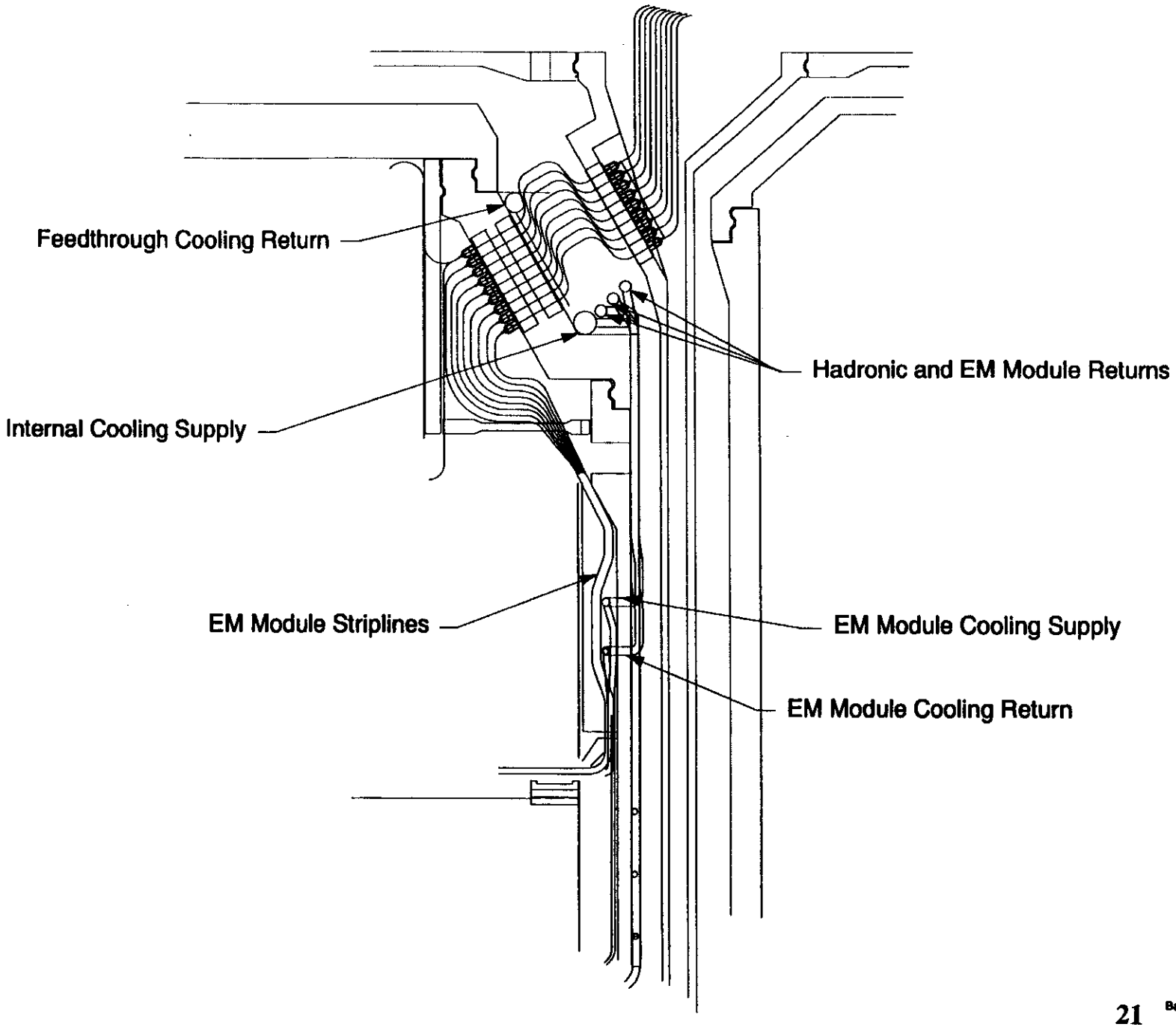

Barnstable: Barr.Cable.Cool: 930428

Barrel Calorimeter Module Orientation

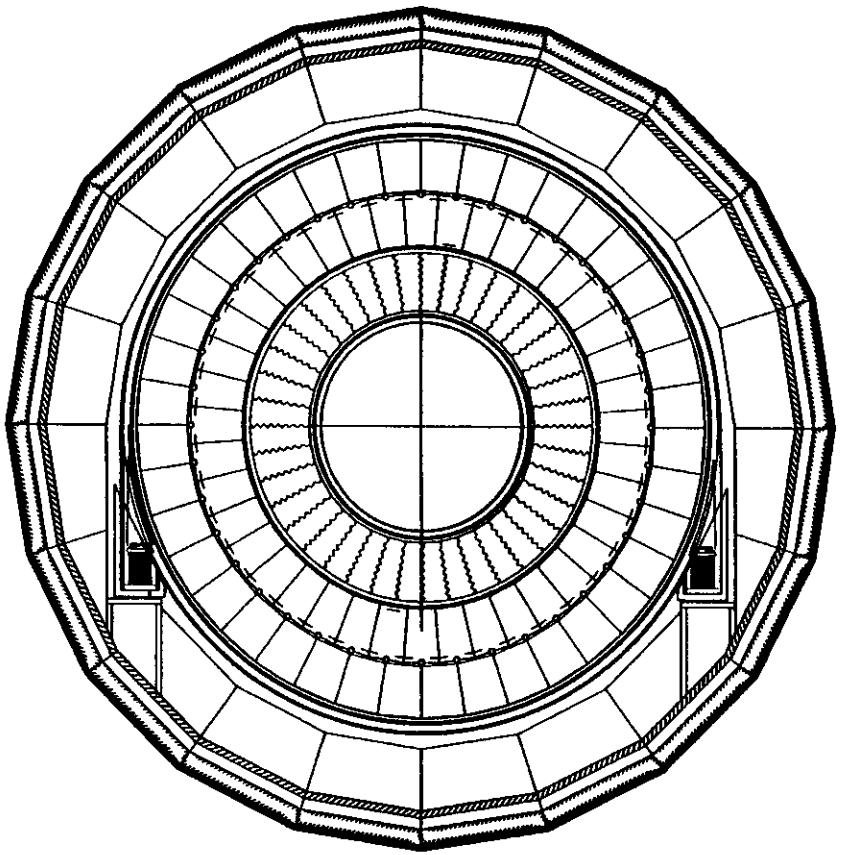

modules_end.dra

Inner Barrel Support Concept (WBS 20.02.4.4)

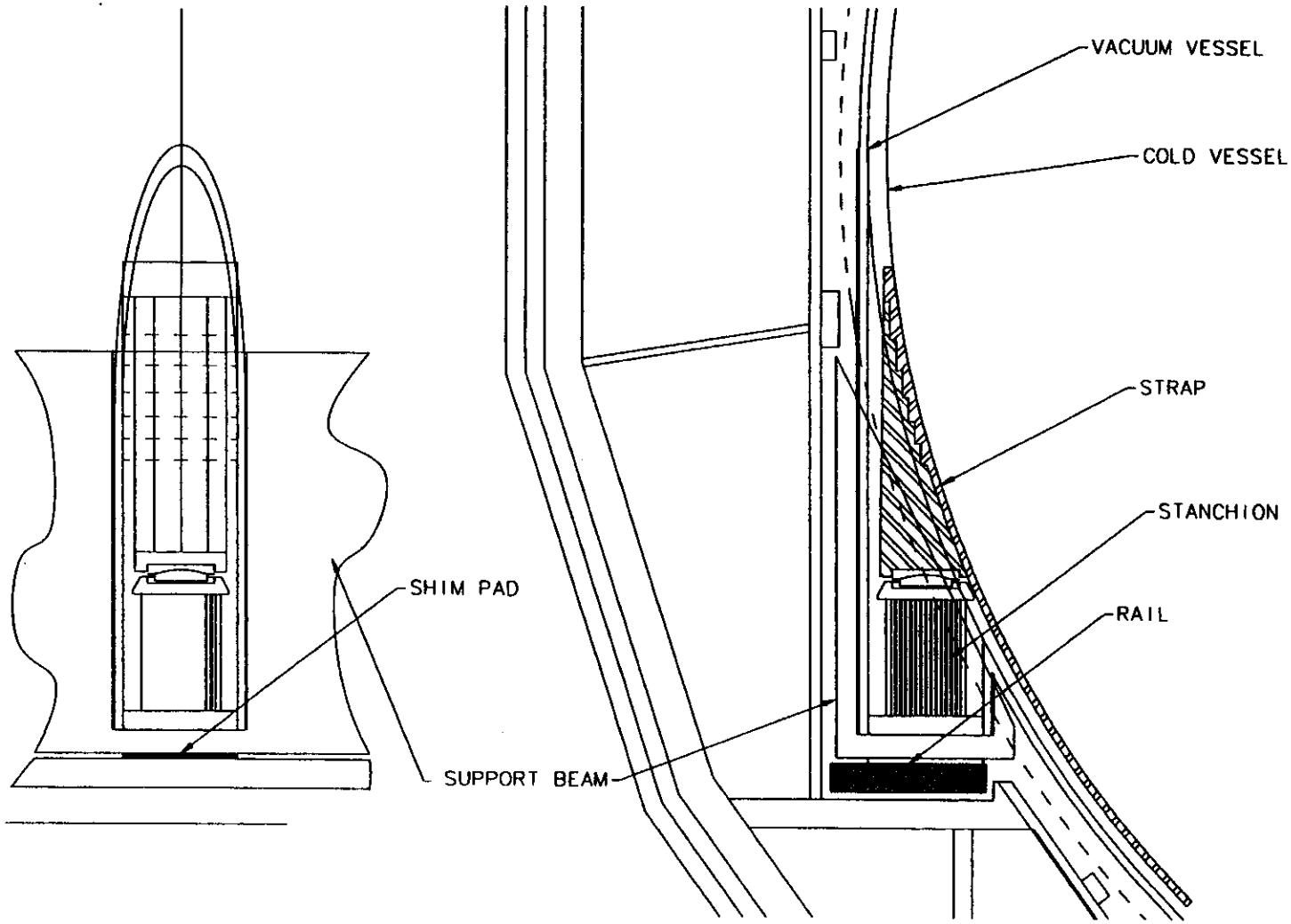

Noble Liquid Calorimeter Overview

All dimensions are in mm.

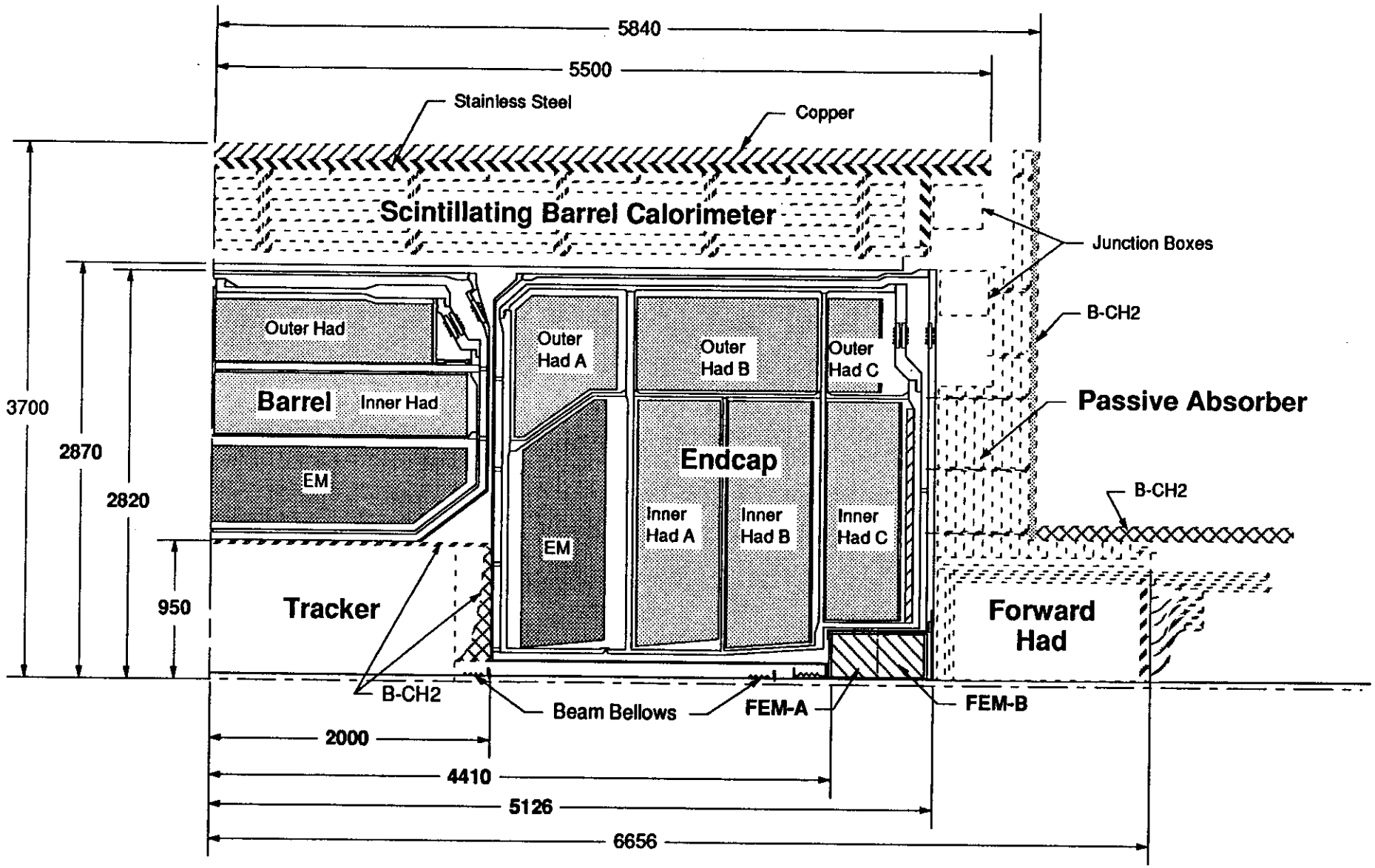

Barnstable: Overview:930426
3/15/93BarStk.Cold.Cu/Warm.Cu
3/15/93NdcpStk.Cold

Isometric View of GEM Endcap EM Monolith

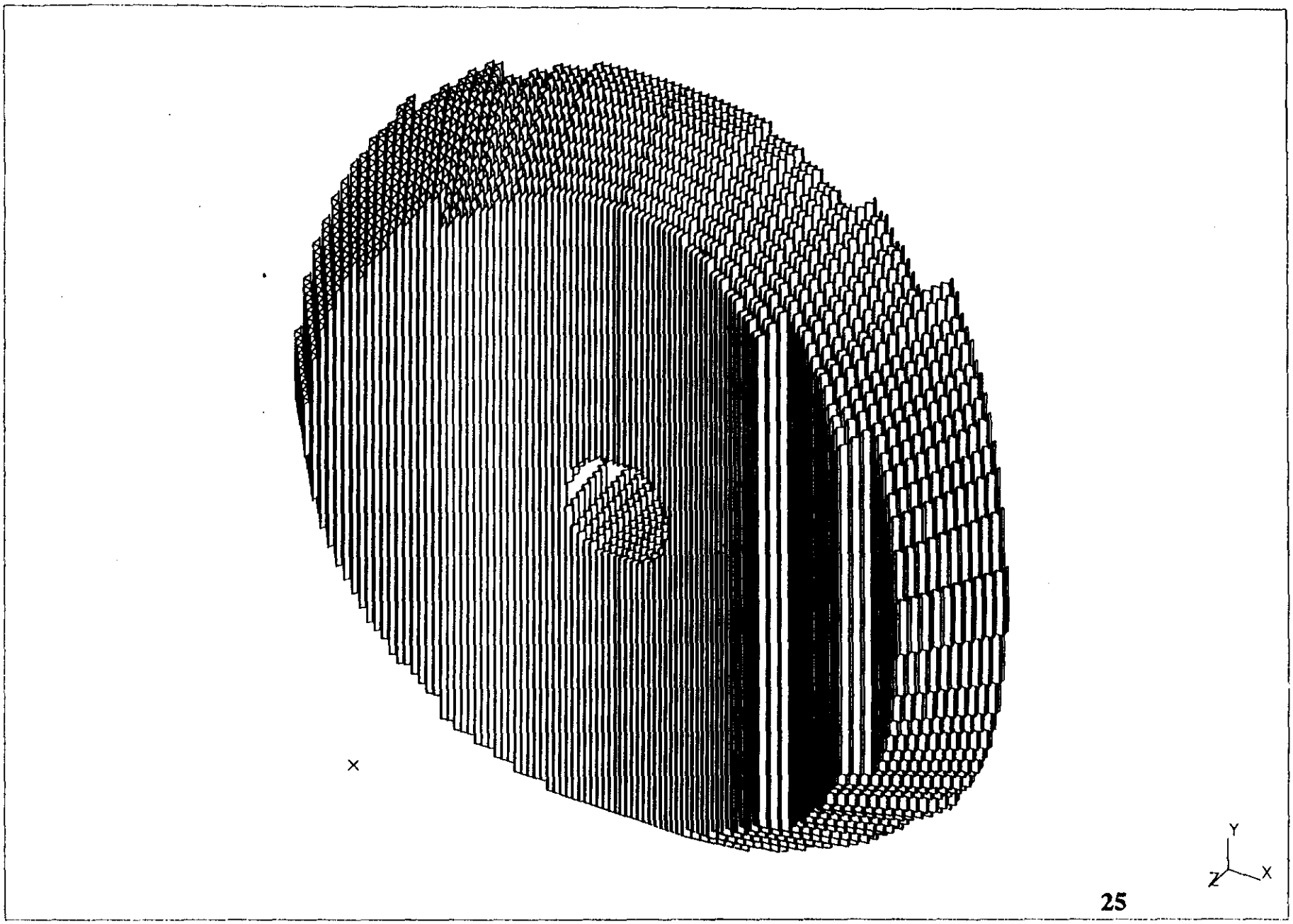

Plan View of Endcap EM with module Boundries Highlighted

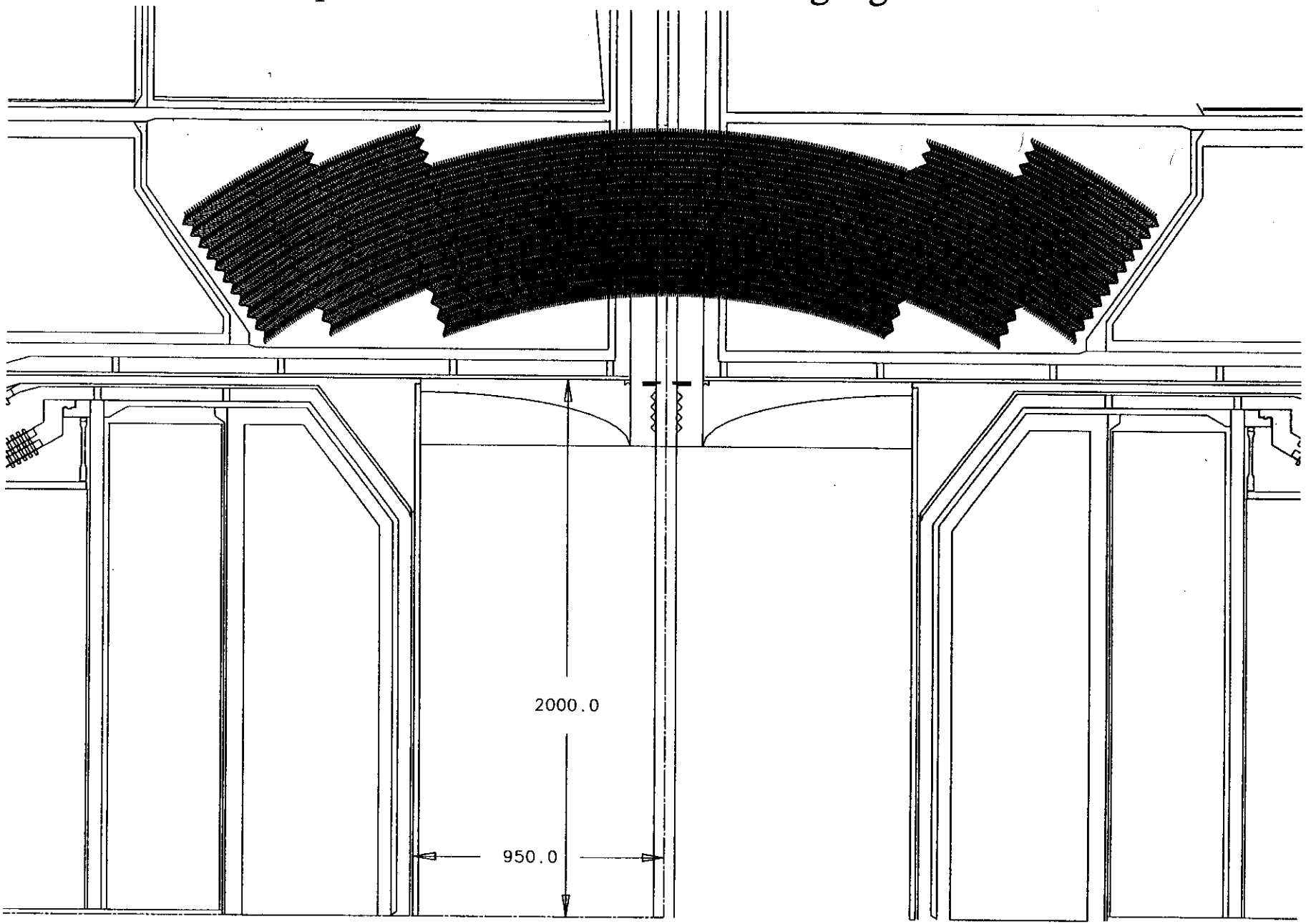

/disk5/casom/newton/gem/tdr_ec_em/endcap_det.pst

Endcap EM Monolith Configuration (WBS 20.02.2)

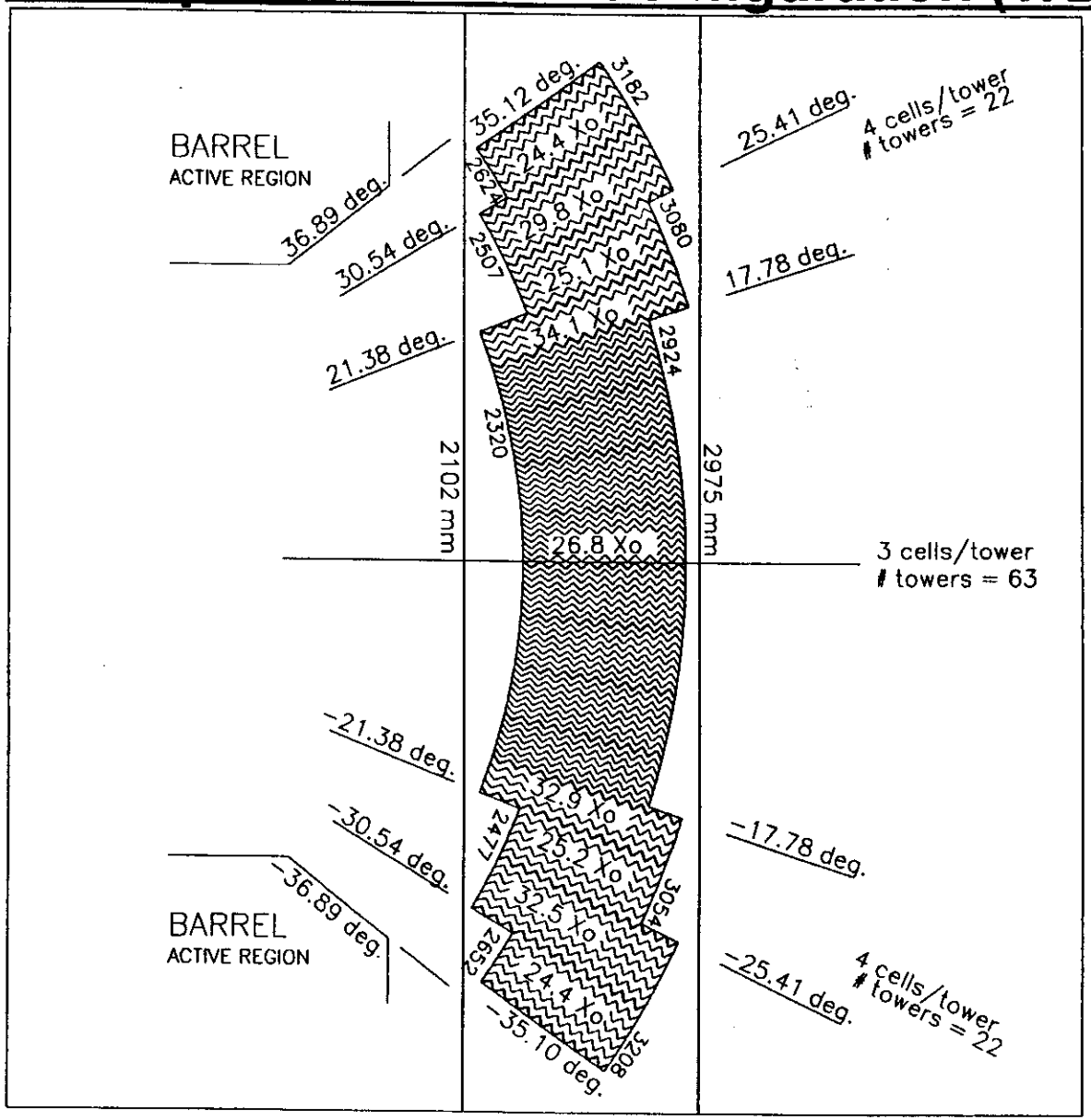

Hadronic Endcap Module

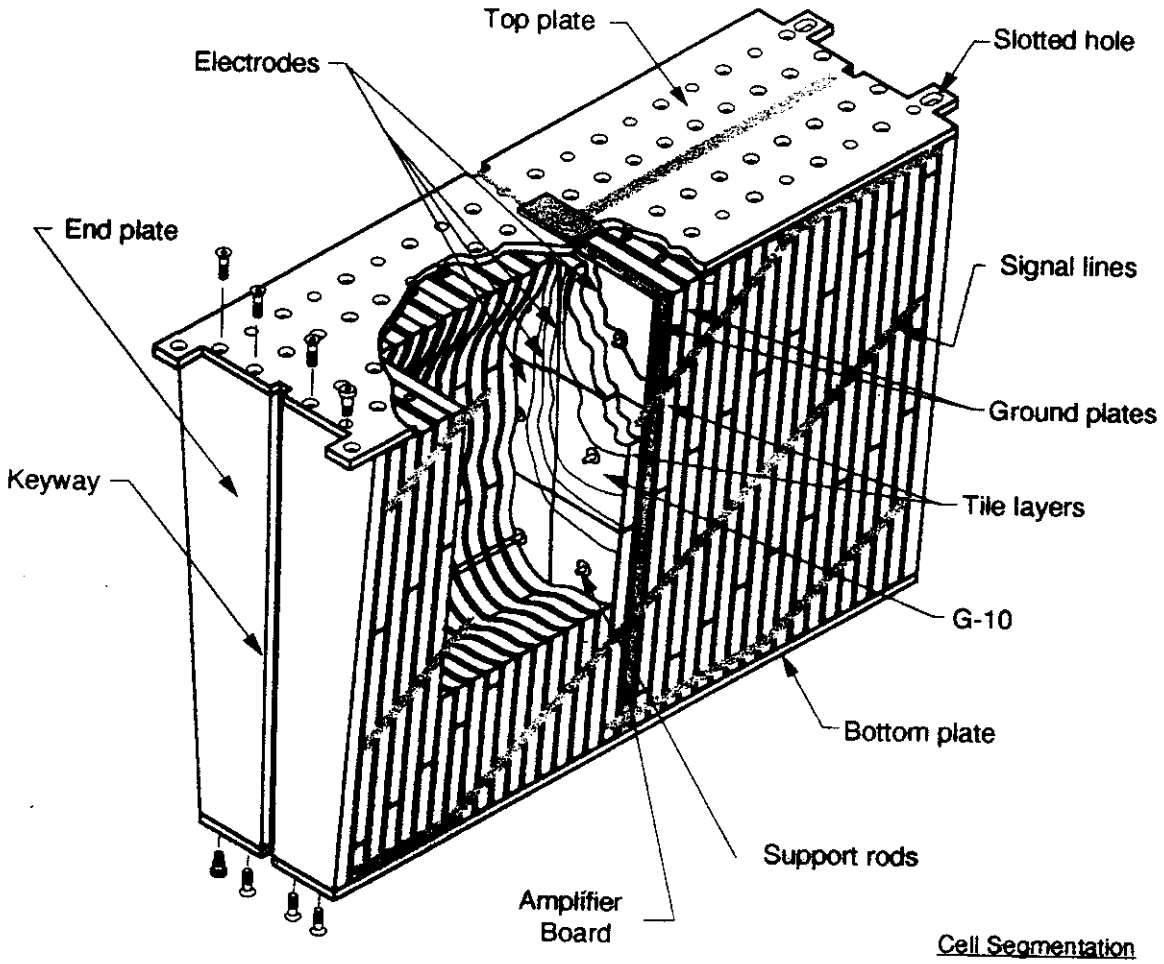

Cell Segmentation

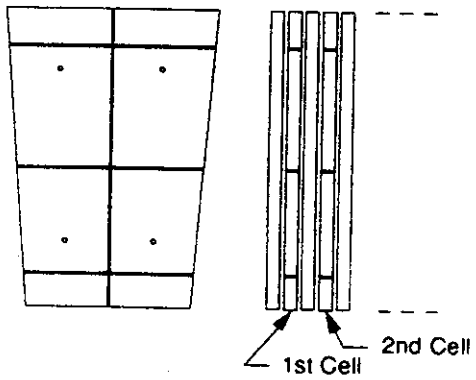

University of Washington
5/6/93 DAF

Noble Liquid Calorimeter Endcap Cryostat (WBS 20.04.5)

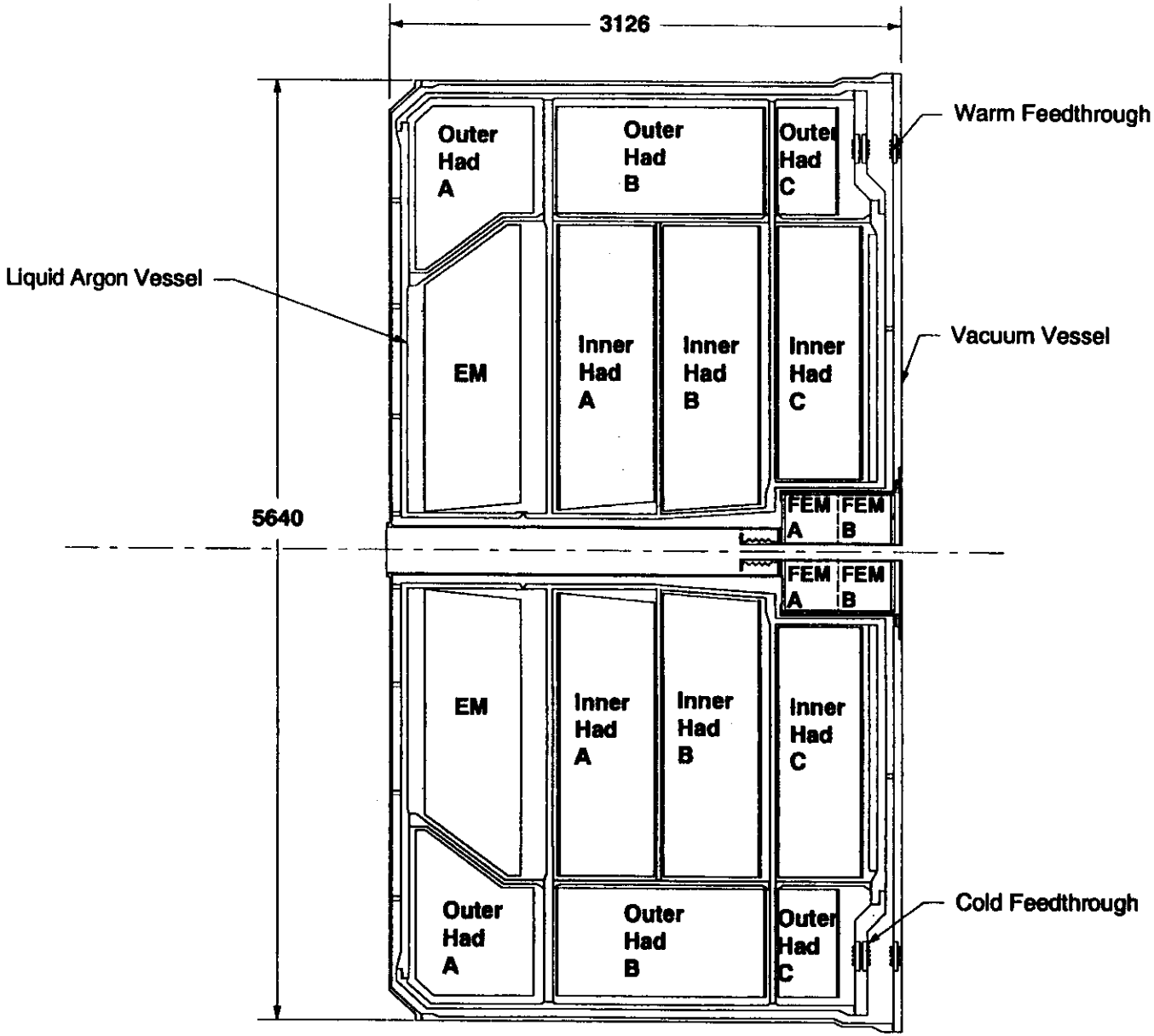

Barnstable: EC.Cryostat: 930429

Cell Orientation in Modules

Segmentation ($\eta \times \varphi$)

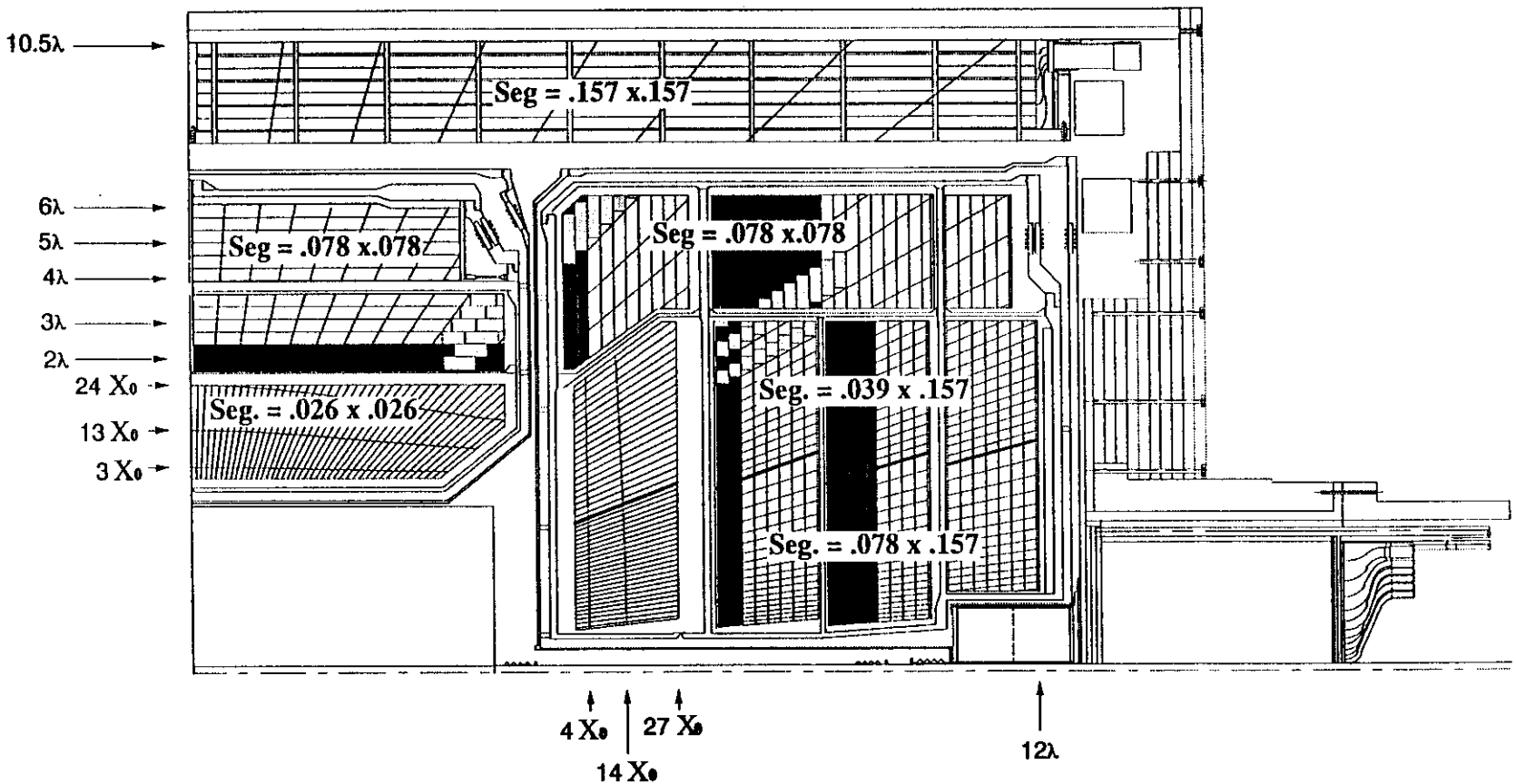

Endcap Calorimeter Segmentation

Segmentation ($\eta \times \varphi$)

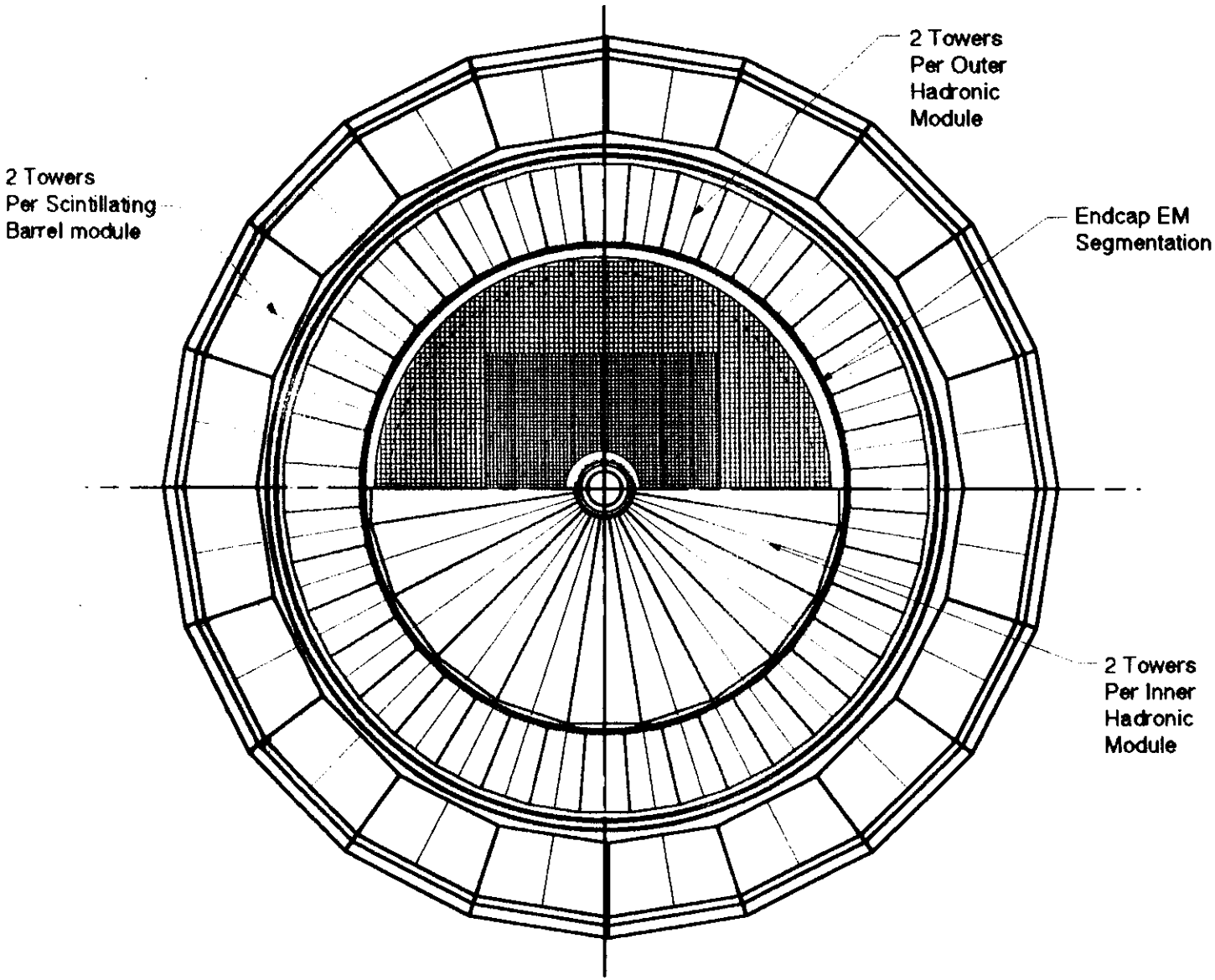

Endcap Calorimeter Segmentation

Segmentation ($\eta \times \varphi$)

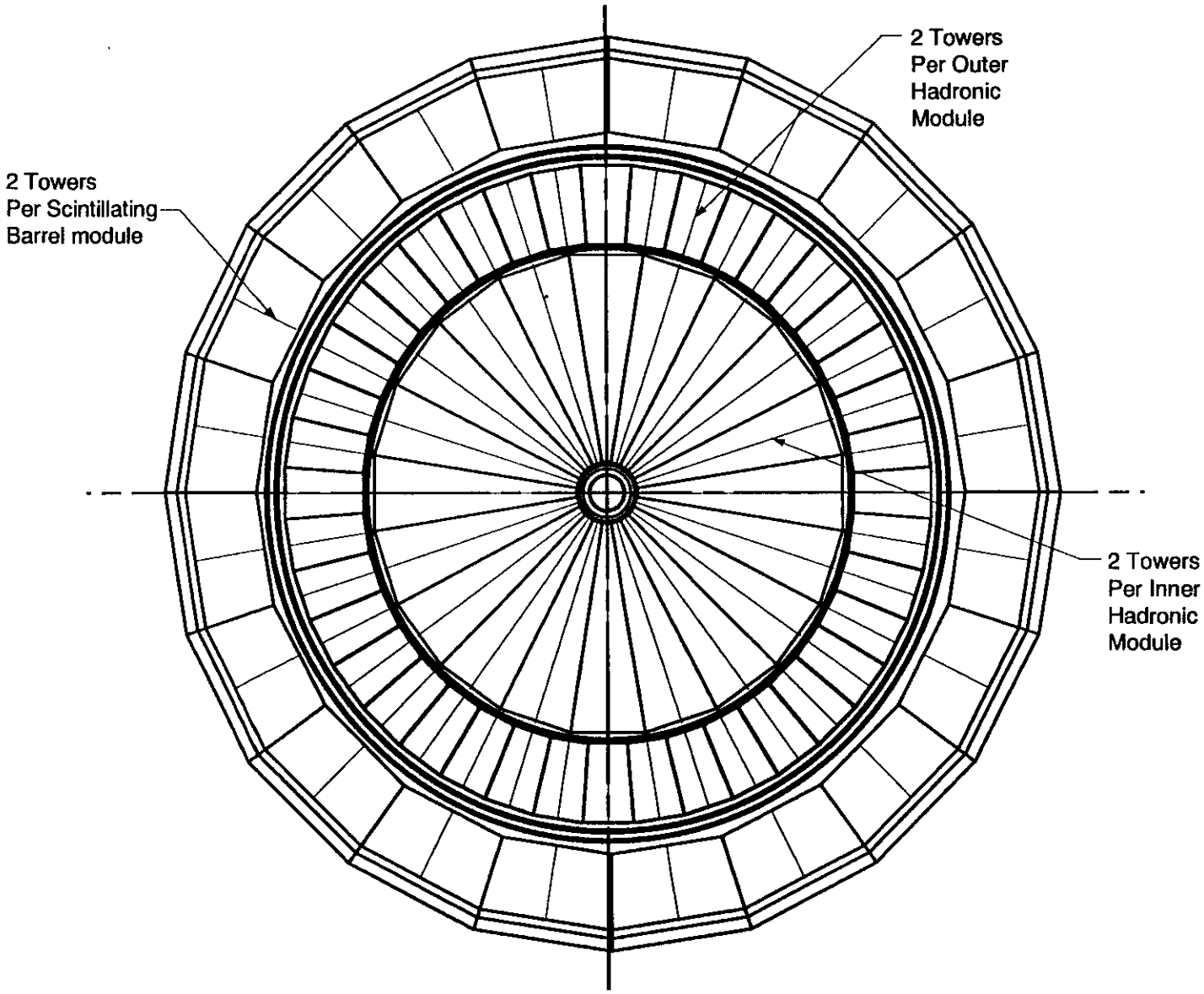

Endcap Calorimeter Feedthroughs

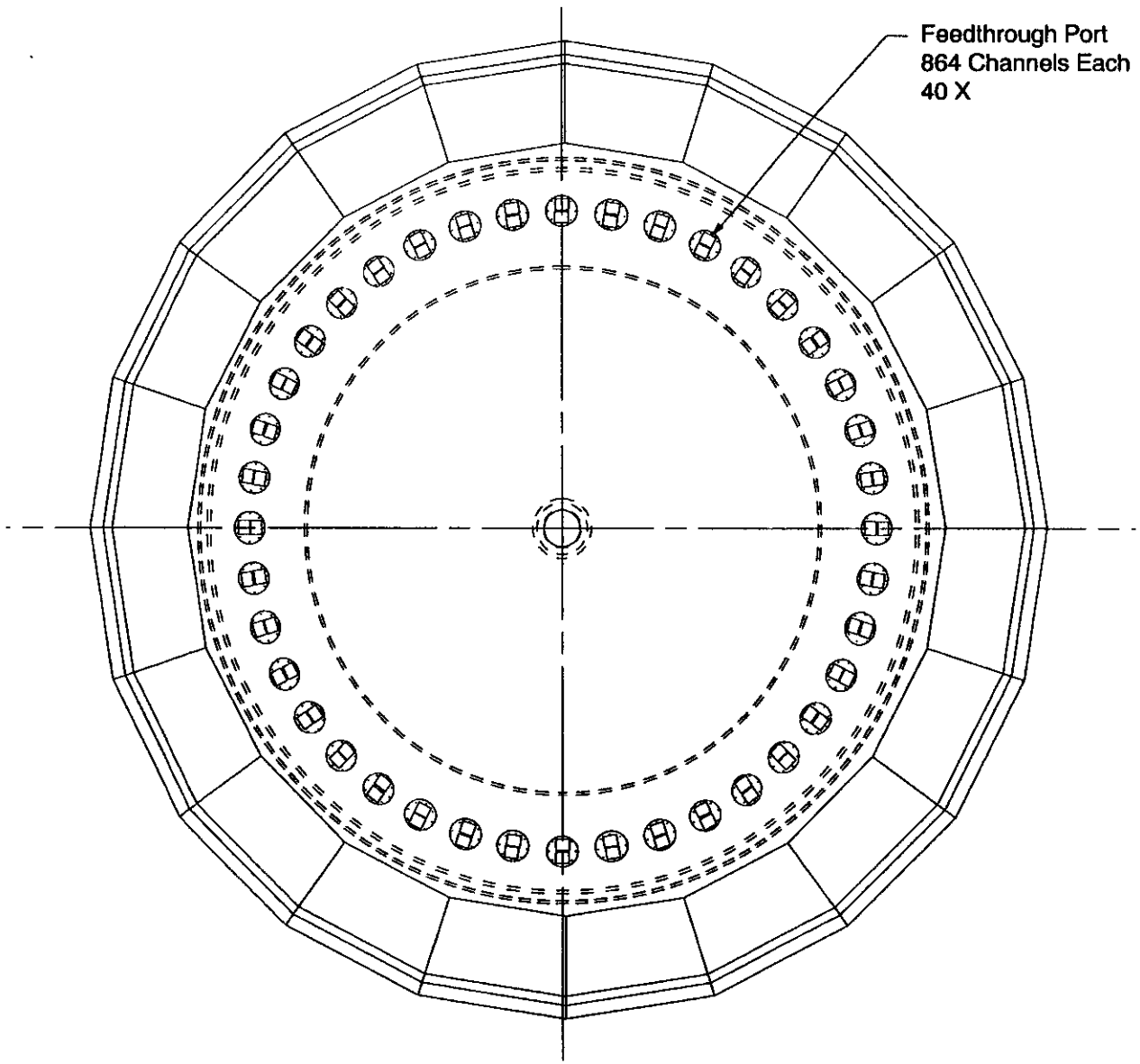

Barnstable: Endcap Feedthrus930520

Liquid Calorimeter Mass and Volume

Mass (Mg)						Volume (Liters)							
Barrel			Endcap			Barrel			Endcap				
Modules	Qty	*Mg	Modules	Qty	Mg	Modules	Qty	Liters	Modules	Qty	Liters		
EM	40	63.5	EM	1	23	EM	40	10191	EM	1	3750		
Inner Had	80	162	Inner Had A	20	48.5	Inner Had	80	3101	Inner Had A	20	1503		
Outer Had	80	174	Inner Had B	20	48.5	Outer Had	80	3330	Inner Had B	20	1504		
Other		65.5	Inner Had C	20	41	Other		6622	Inner Had C	20	1273		
			Outer Had A	40	57				Outer Had A	40	1754		
			Outer Had B	40	86				Outer Had B	40	2664		
			Outer Had C	40	24				Outer Had C	40	754	Scint Cal & PA	1753
			FEM A & B		2				FEM A & B		7	Barrel Total	465
			Other		59				Other		8185	Endcap Total	389
												Endcap Total	389
Total		465			389	Total		23244			21394	Total Cal	2996

* These weights reflect 9 mm lead plates in the barrel hadronic modules.

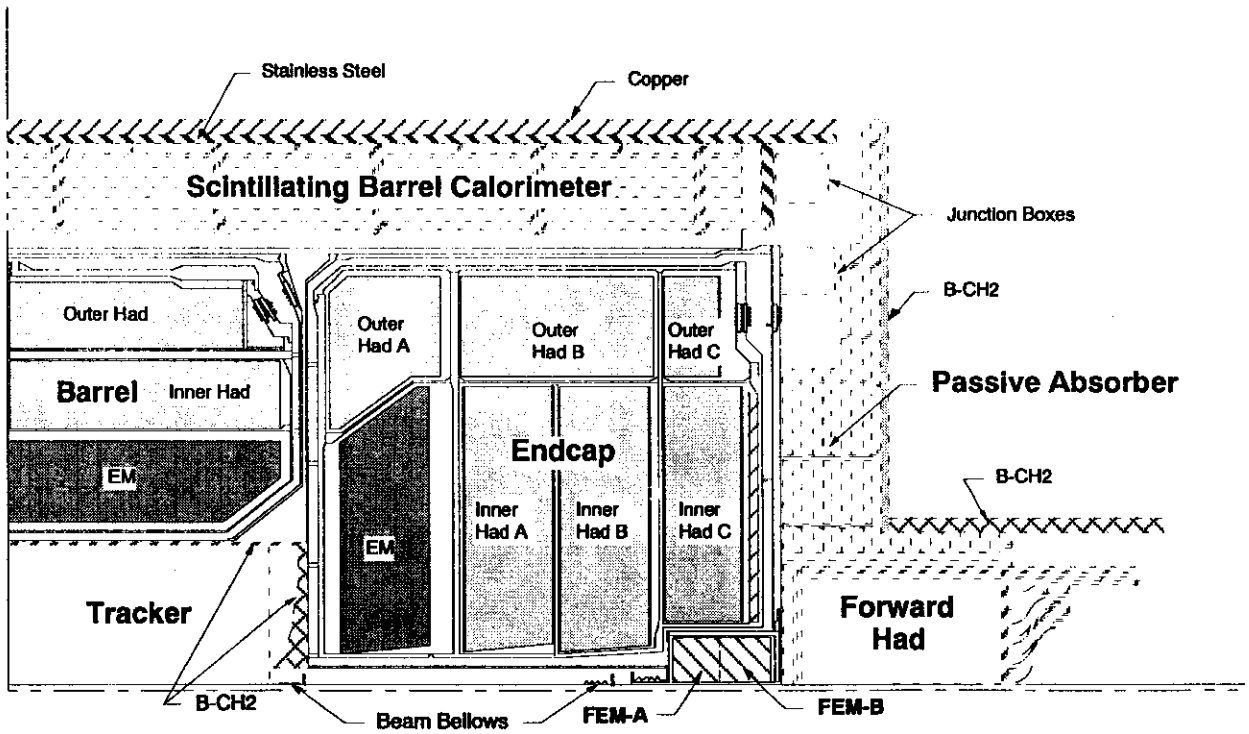

Barnstable: Mass/Vol: 930521

Interfaces

Interfaces

- External Interfaces
  - Controlled by ICDs
  - ICD Scope Sheets Are Complete and Coordinated
  - Calorimeter Has Eight External Interfaces

- Internal Interfaces
  - Controlled With ICDs When Each Side of Interface Has Different Design Agencies
  - Calorimeter Internal ICD Scope Sheets Are Complete
  - Calorimeter Has Eight Internal Scope Sheets

- ICDs Will Be Initiated by Preliminary Design Review (PDR)

- ICDs Will Be Complete Soon After PDR But Not Later Than CDR

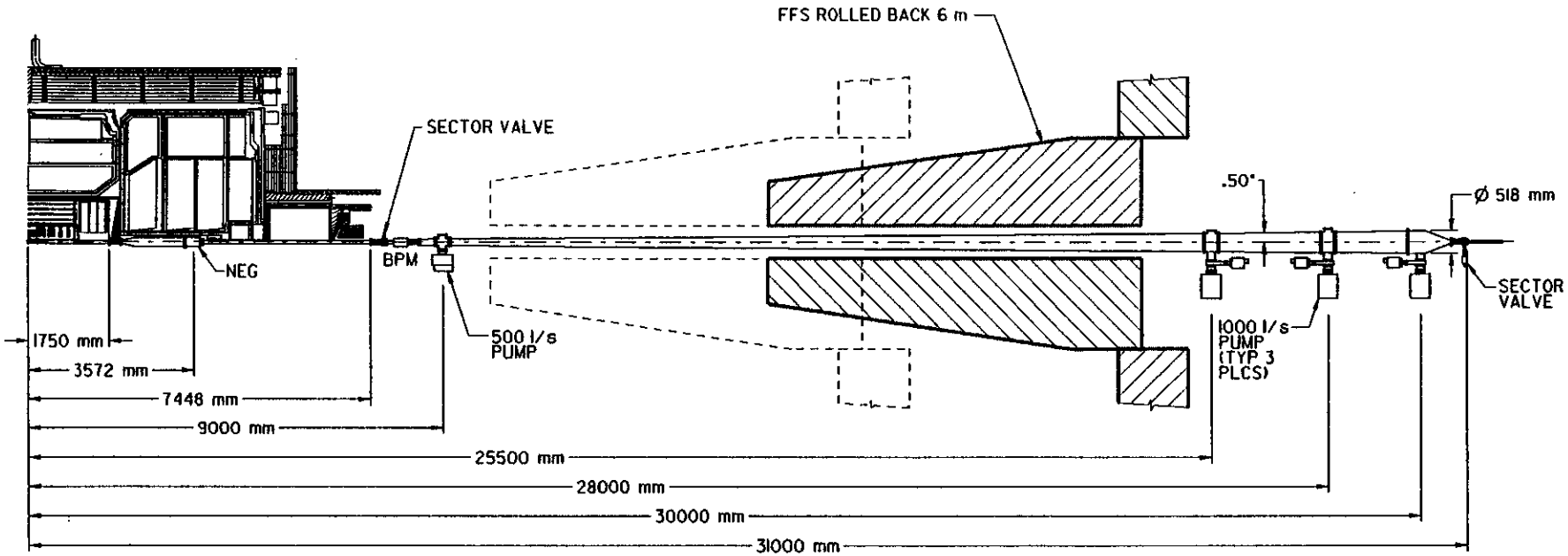

Figure 1

Beam Pipe In The Entire Interaction Region

Cryogenics and Vacuum

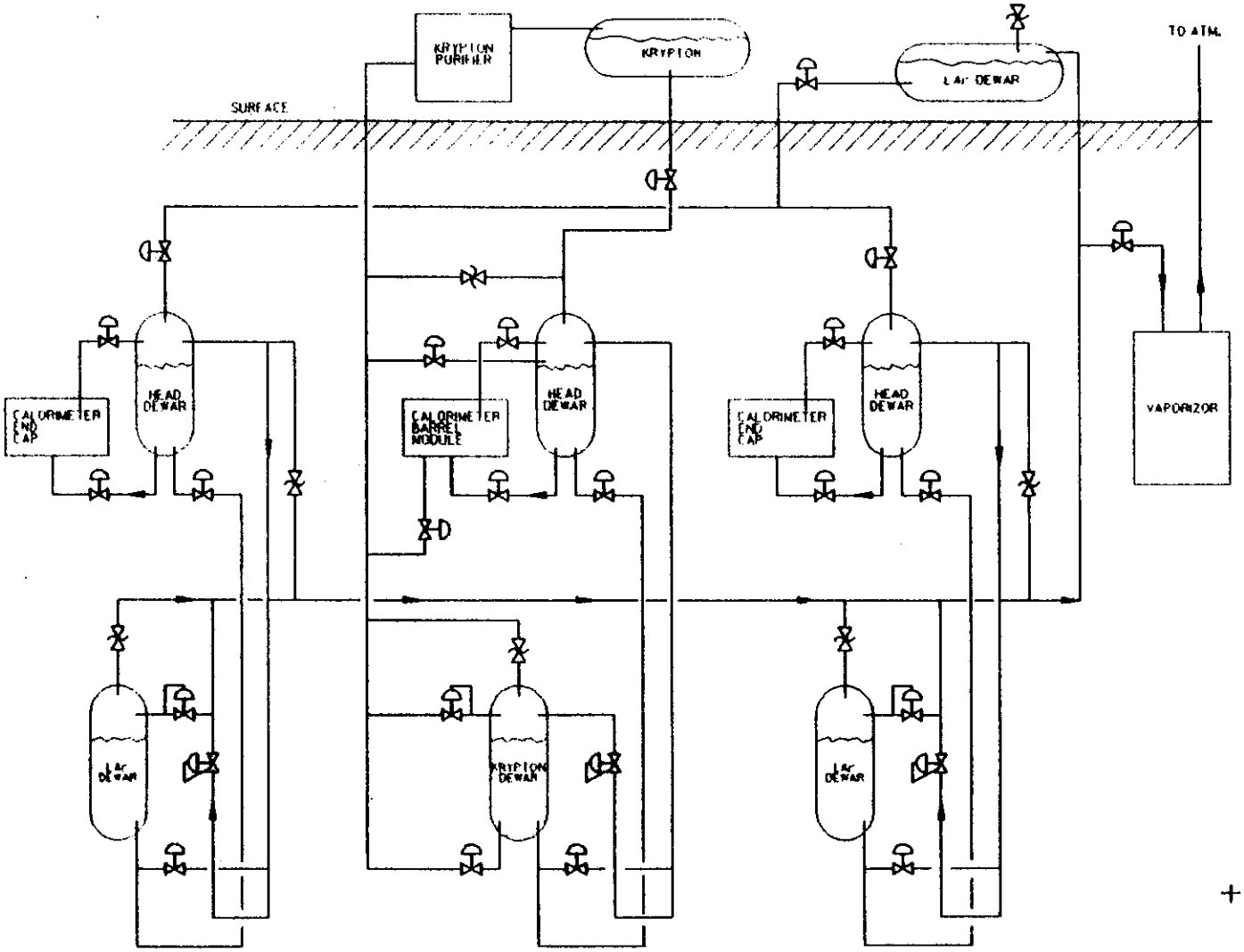

FIGURE 5.4.6.1.2
gemcal.sh
ref: gemcal.lig
930330

GEM CALORIMETER
LIQUID ARGON/KRYPTON
SUPPLY SYSTEM

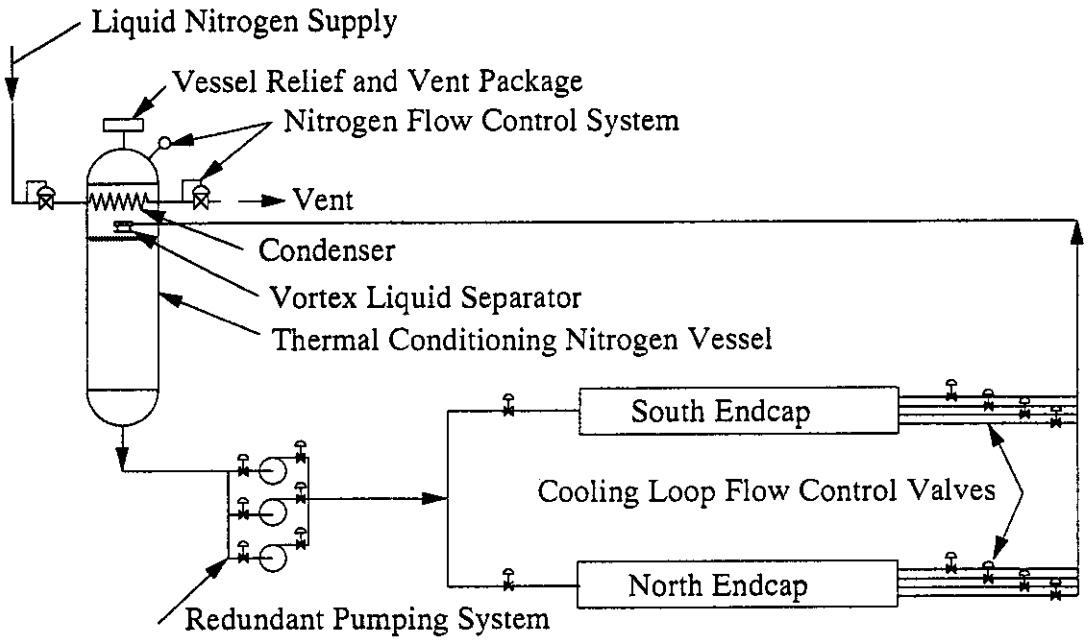

Endcaps Liquid Nitrogen Conditioning Schematic

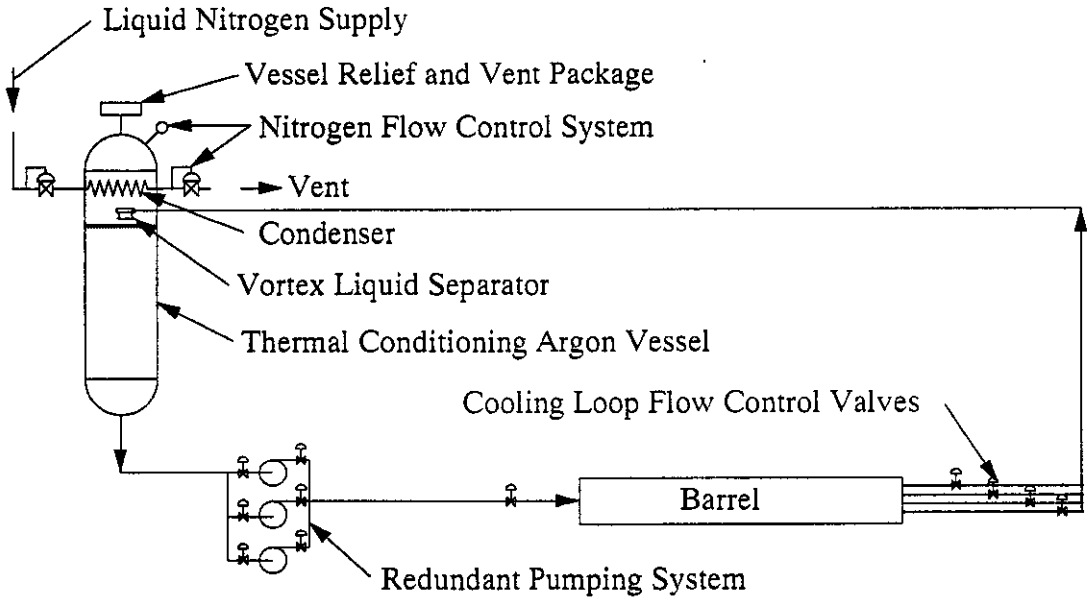

Barrel Liquid Argon Conditioning Schematic

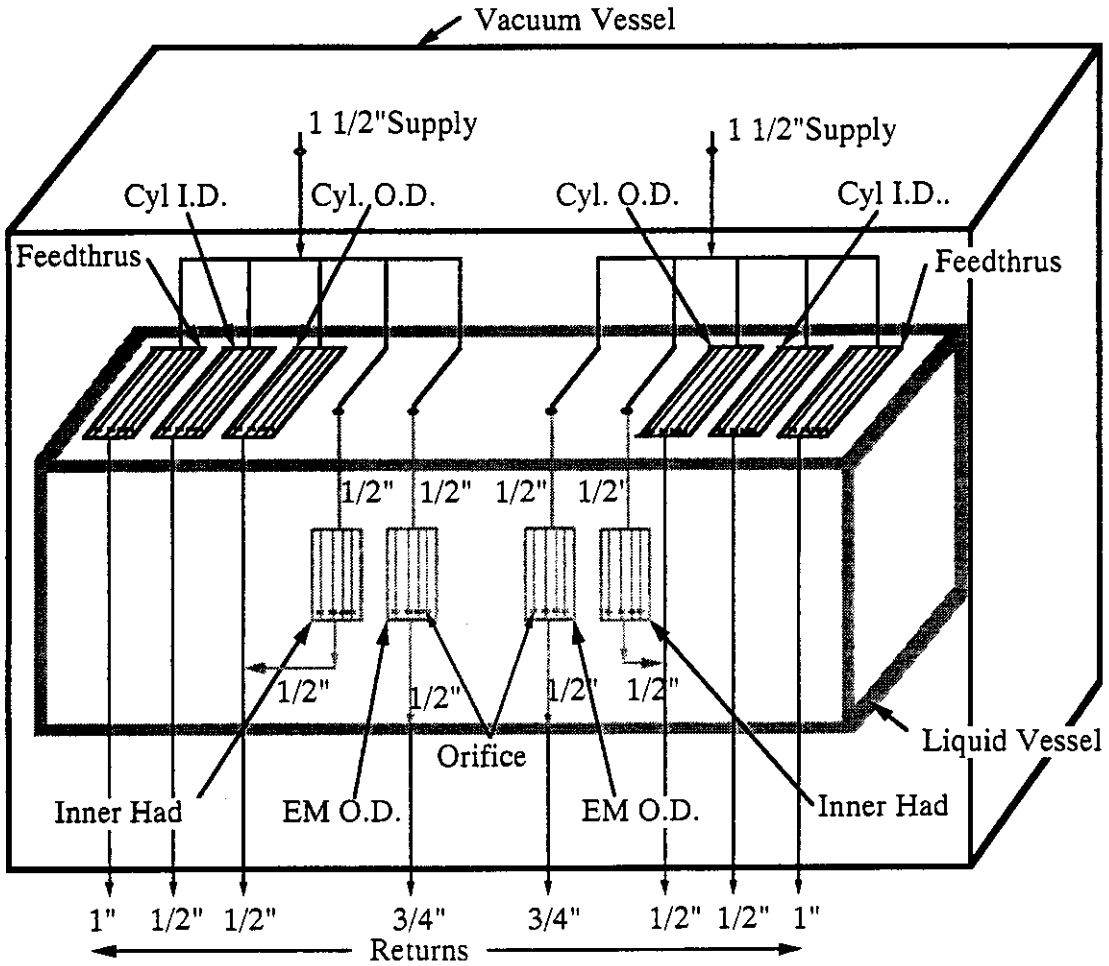

Shaded Cooling Loops are Located inside the Liquid Vessel

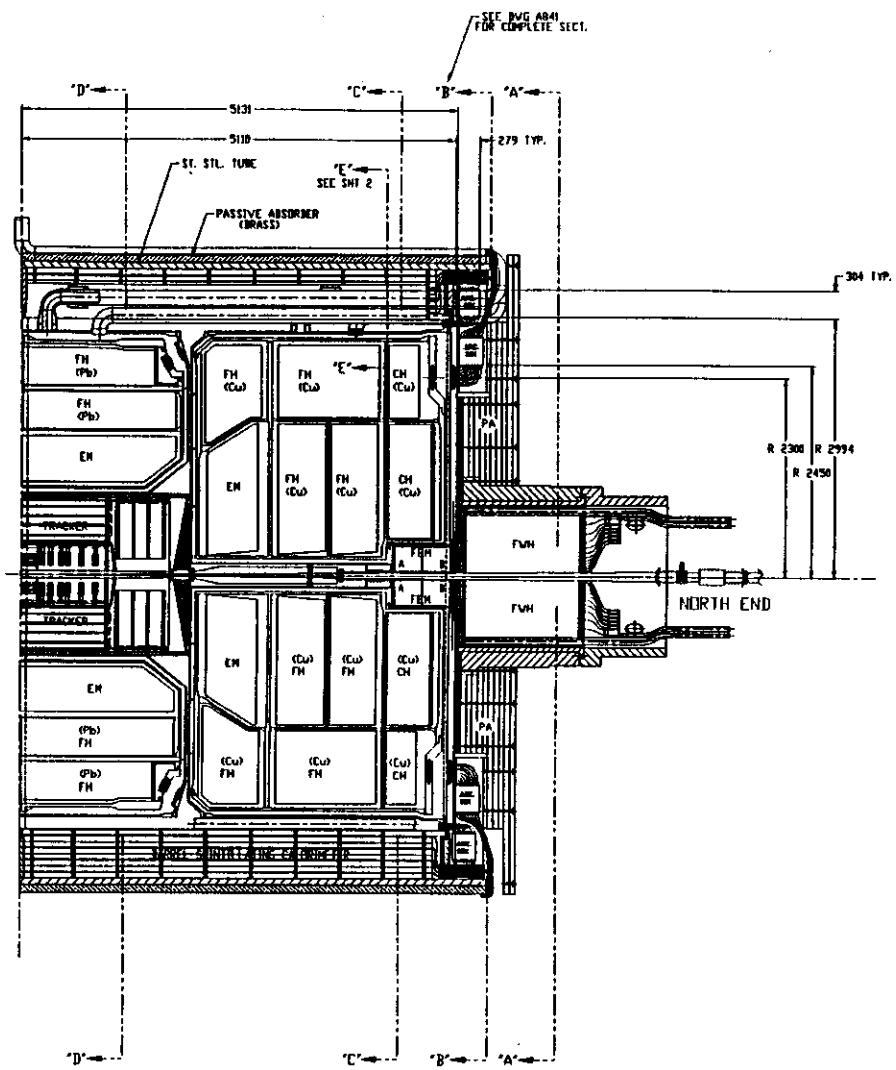

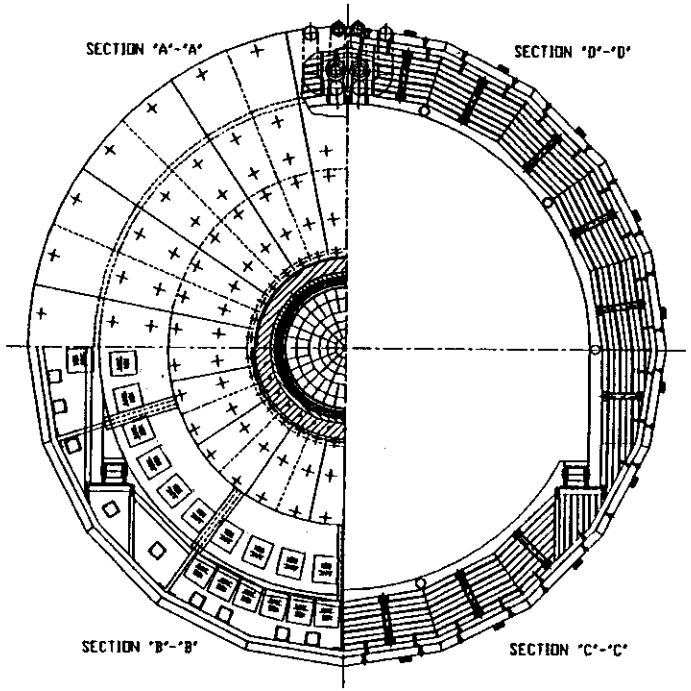

DIMENSIONS ARE IN MILLIMETERS UNLESS OTHERWISE SPECIFIED		
TOLERANCES (Except As Specified)		
OVER	UNDER	TOLERANCE
0	2.999	±0.13
3	5.999	±0.2
6	29.999	±0.3
30	119.999	±0.8
120	314.999	±1.2
315	999.999	±2
1000	1999.999	±3
2000	3999.999	±4
4000	7999.999	±5
ANGLES		±2

DO NOT SCALE DRAWING

DO NOT REVISE MANUALLY

ORIGINAL TISSUE

DRN. R.J. SINCAIR	5/93	
DSGN. J.V. HOURE	5/93	
DEPT. & PLANT ENG. H.M. SINGLETARY	5/93	
PC R.J. RENNICH	5/93	

NOTE: DIMENSIONS ARE IN MILLIMETERS.

GEM DETECTOR
BARREL SCINTILLATING CALORIMTER
FOUR END SECTION VIEWS

N/A

SCALE	SIZE	PLANT DRWG.	DWG. NO.	SHEET	REV
1/12	3240	X3E01704B	A842	1 of 2	0

X3E01704B A842

42

PLOT SCALE: XXX

Barrel Calorimeter Vacuum and Liquid Supply Lines

Vacuum System: WBS 20.07.2.4
Cryogenic System: WBS 20.08.2.6

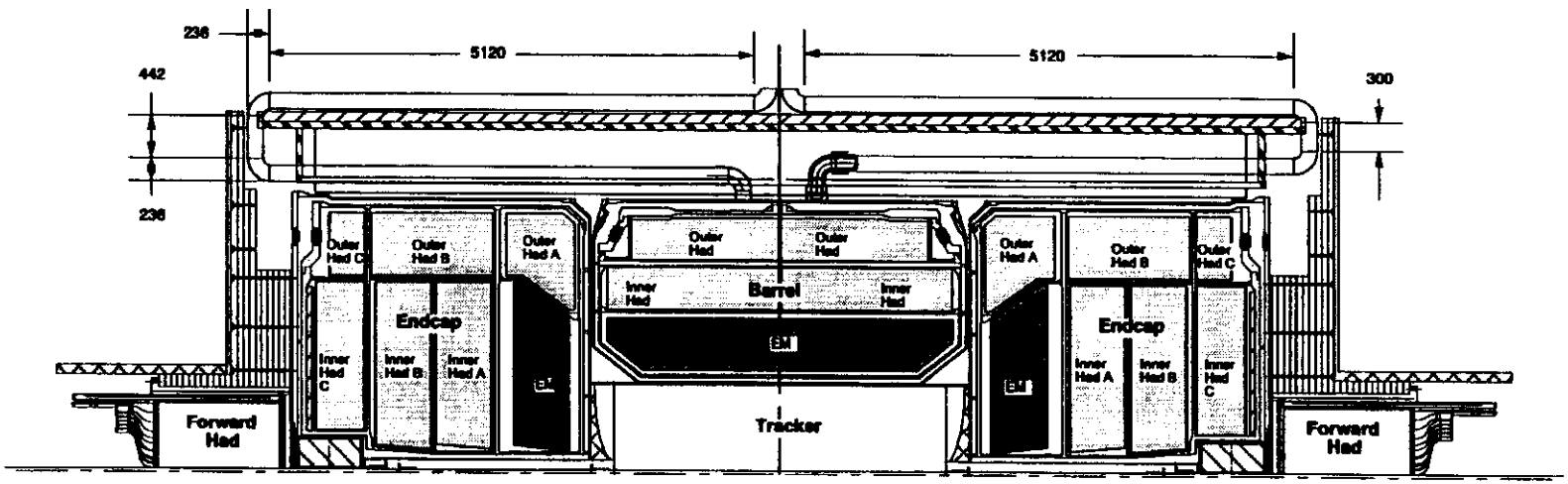

Barnstable: Barrel.Supply 930429

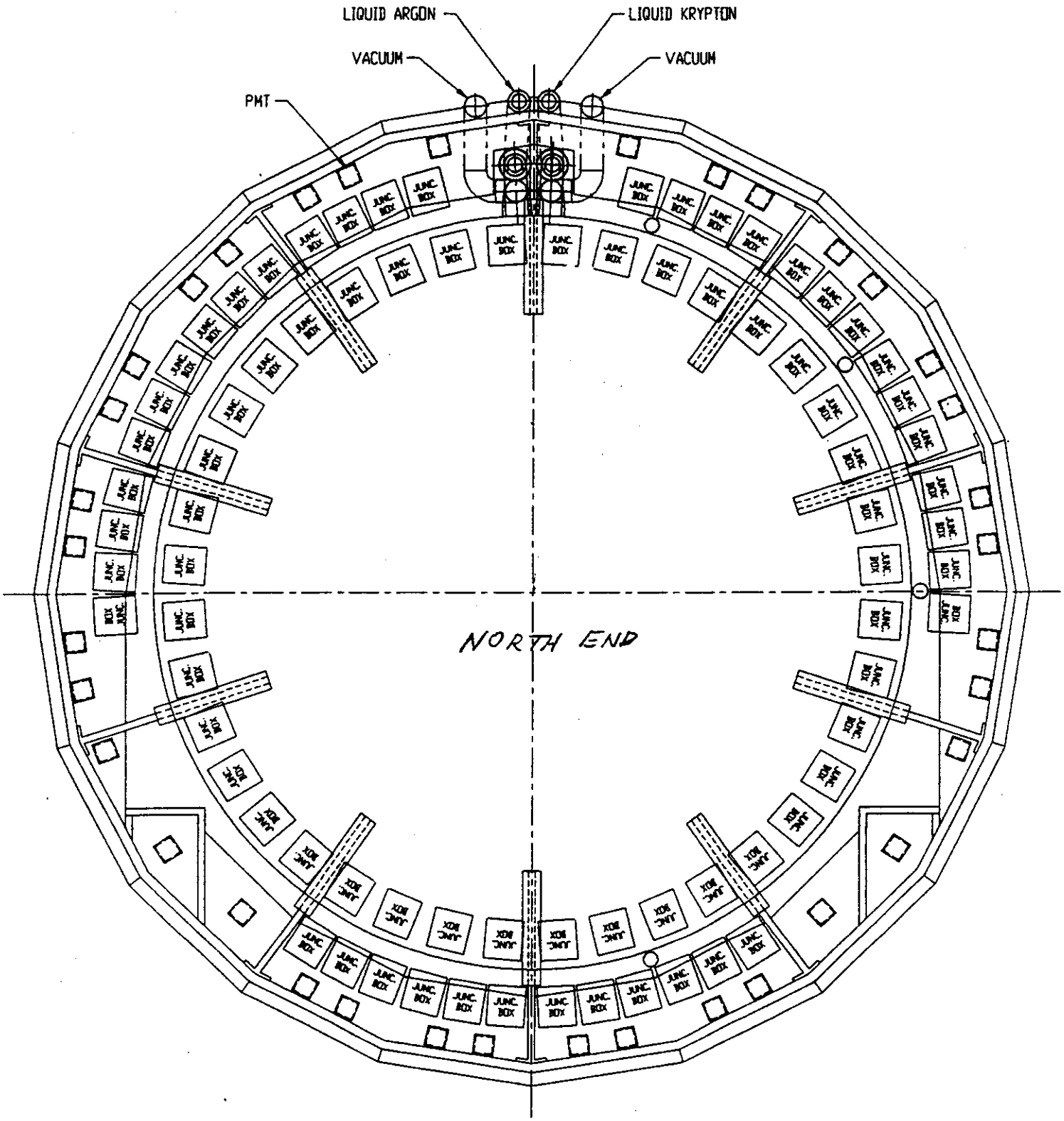
LIQUID ARGON
LIQUID KRYPTON
VACUUM
VACUUM
PMT
JUNC. BOX
NORTH END

Maintenance Access

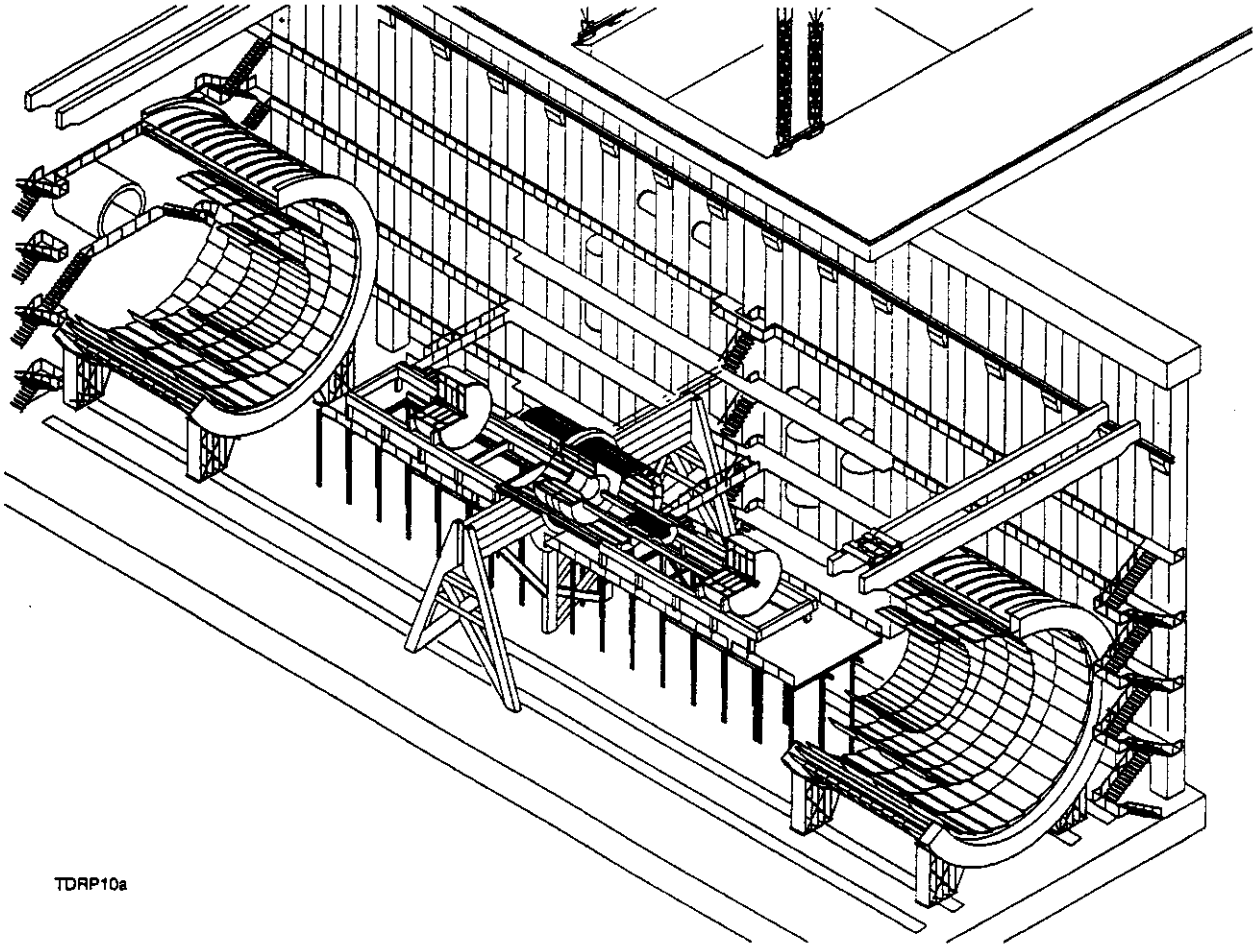

TDRP10a