PAC Review 5.25.93

GEM Liquid Ionization Calorimeters

Hd. 25/5

V. Radeka

- Introduction: Scope and Goals
- Design Overview:
  - Segmentation
  - EM Electrode Configuration
  - Hadron " "
  - EM Forward Calorimeter
- Readout and Dynamic Range
- Constant Term for EM
- Calibration
- Outline of R&D Plans

WORKING GROUPS	LEADER(S)	ADDITIONAL INFORMATION AT THE TDR REVIEW
1. Overall mechanical and cryogenic design	L. Mason	D. Lissauer B. Humphreys
2. EM Calorimetry	M. Seman/R. McCarthy	H. Ma, B. Easom
3. Hadron Liquid	F. Lobkowicz, P. Mockett	K. Barnstable
4. Hadron Scintillator	Y Kamyshkov	M. Rennich
5. Forward	J. Rutherfoord	
6. Readout and Electronics	J. Parsons	S. Rescia, D. Makowiecki
7. Feedthroughs	P. Mockett, F. Lobkowicz	D. Makowiecki
8. Trigger	W. Cleland	
9. Simulation	J. Womersley	M. Seman, H. Ma
10. Cryogenics system	D. Richied, M. Wilson	M. Diwan, D. Rahm
11. Installation and Integration	W. Wisniewski	
12. Tests at FNAL	P. Slattery	F. Lobkowicz
13. Liquid Kr procurement	H. Gordon, A. Onuchin	
14. TDR	H. Gordon	

Liquid Calorimeter Support Documents:

1) Assembly of Liquid Barrel Calorimeter	TN-93-309
2) Assembly of Liquid Endcap Calorimeter	TN-93-310
3) Barrel Hadronic Modules	TN-93-311
4) Endcap Hadronic Modules	TN-93-312
5) Inner Barrel Cryostat Design Concept	TN-93-313
6) Endcap Cryostat Design Concept	TN-93-314
7) Feedthrough Design	TN-93-315
8) Liquid Calorimeter Thermal Design Concept	TN-93-316
9) Cryogenics System for Liquid Calorimeter	TN-93-317
10) Vacuum system for Liquid Caloriemter	TN-93-318
11) Information Flow-- Calorimeter segmentation	TN-93-319
12) Structure of Barrel EM Calorimeter	TN-93-320
13) Structure of Endcap EM Calorimeter	TN-93-321
14) EM Electrode Design	TN-93-322
15) EM Absorber production	TN-93-323
16) EM Crocodile Press (Barrel)	TN-93-324
17) EM Mold Press	TN-93-325
18) EM Module Assembly	TN-93-326
19) Liquid Calorimeter - Internal Electronics	TN-93-328
20) Installation Inside Liquid Calorimeter	TN-93-327

Key Areas in the Calorimeter Design Phase

- Configuration and Parameter Optimization
- Segmentation
- Electrodes and Interconnections
- Readout and Dynamic Range
- Calibration
- Trigger
- Feedthroughs
- Modular Structures
- Cryostat
- Cryogenics System
- R&D and the Beam Test Program

Key Areas in the Construction Phase

- Construction and Quality Control
- Calorimeter Asssembly
- Calorimeter Installation
- Integration with Other Subsystems
- Access
- Operating Procedures
- Safety

OPERATIONAL GOALS:

1. **10 years of operation without major overhauls (cryostat disassembly).**

2. **Access to junction box areas every ~ 2 years.**

3. **Continuous purification of the liquids.**

4. **Anticipate high luminosity operation.**

What is new and different from:

SLD, D_o, H_1

1.	**Speed**	**1 μsec → 20 nsec**
2.	**Calibration Accuracy**	**1% → 0.2%**
3.	**Segmentation**	**~ 3 times more channels**
4.	**Radiation Levels**	**SLD → SSC/LHC**

5. **Much higher consequences of failures!**

Reliability and Failure Modes
Liquid Ionization Calorimetry

Electrical Cables and Connections (Shorts / Open Circuits)

- **Power** (duplicate cables and connections)
- **High Voltage** (duplicate cables and connections)
- **Signal** (design strain relief for connectors of proven reliability)
- **Calibration** (parallel feed on common control lines)

Feedthrough

- **Electrical Connections** (manufacturing experience and testing)
- **Vacuum** (design permits complete testing of assembly before installation)

Pre-amplifier and Calibration Hybrids

- **Design** (accumulated experience in US and Europe)
- **Burn-in** (raised temperatures and voltages)
- **Fusible Resistors** (on pre-amplifiers)
- **Noisy Channels** (turn channels off electronically in pulse shapers)

Signal Electrodes

- **High Voltage** (dual feed, X and X' supplies)
- **Current Limiting Resistors**
- **Isolation** (1.5 gap width minimum distance to ground)

Simulations for Failure Criteria

- (e.g. two percent of channels can fail before physics is compromised)

Materials

- All materials used must have proven radiation hardness over the lifetime of the detector. All materials used must contain no potential contaminates which would poison the ionization liquid.

Reliability

- We feel that the principal means of ensuring the reliability of systems and components used in our liquid calorimetry is to rely heavily on past experience in calorimeter design both in the US and Europe. Wherever possible only components and techniques with proven track records will be used in this design. Standard models used to calculate this data is to be used as a back-up.

Certification and Quality Assurance

Liquid Calorimeter Mass and Volume

Mass (Mg)						Volume (Liters)					
Barrel			Endcap			Barrel			Endcap		
Modules	Qty	*Mg	Modules	Qty	Mg	Modules	Qty	Liters	Modules	Qty	Liters
EM	40	63.5	EM	1	23	EM	40	10191	EM	1	3750
Inner Had	80	162	Inner Had A	20	48.5	Inner Had	80	3101	Inner Had A	20	1503
Outer Had	80	174	Inner Had B	20	48.5	Outer Had	80	3330	Inner Had B	20	1504
Other		65.5	Inner Had C	20	41	Other		6622	Inner Had C	20	1273
			Outer Had A	40	57				Outer Had A	40	1754
			Outer Had B	40	86				Outer Had B	40	2664
			Outer Had C	40	24				Outer Had C	40	754
			FEM A & B		2				FEM A & B		7
			Other		59				Other		8185
Total		465			389	Total		23244			21394

Scint Brl & PA	1753
Barrel Total	465
Endcap Total	389
Endcap Total	389
Total Cal	2996

* These weights reflect 9 mm lead plates in the barrel hadronic modules.

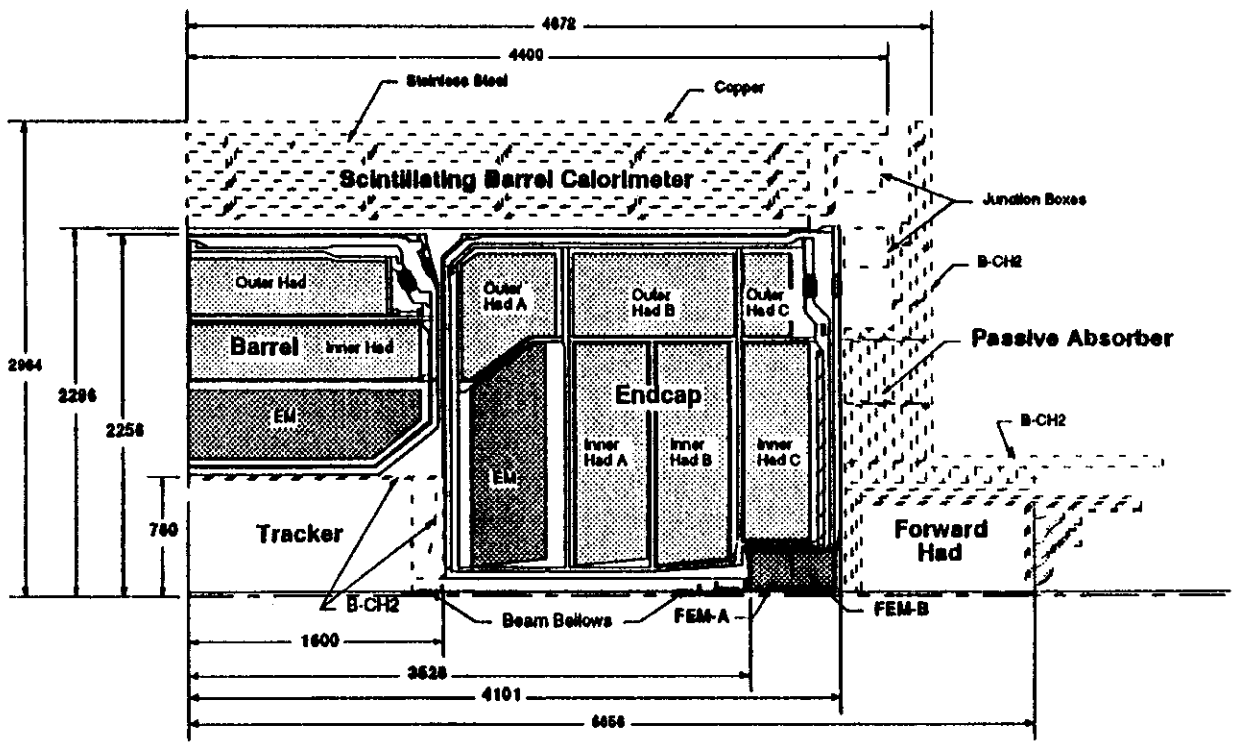

GEM Calorimeter with Commercial Feed-thrus in Bellows

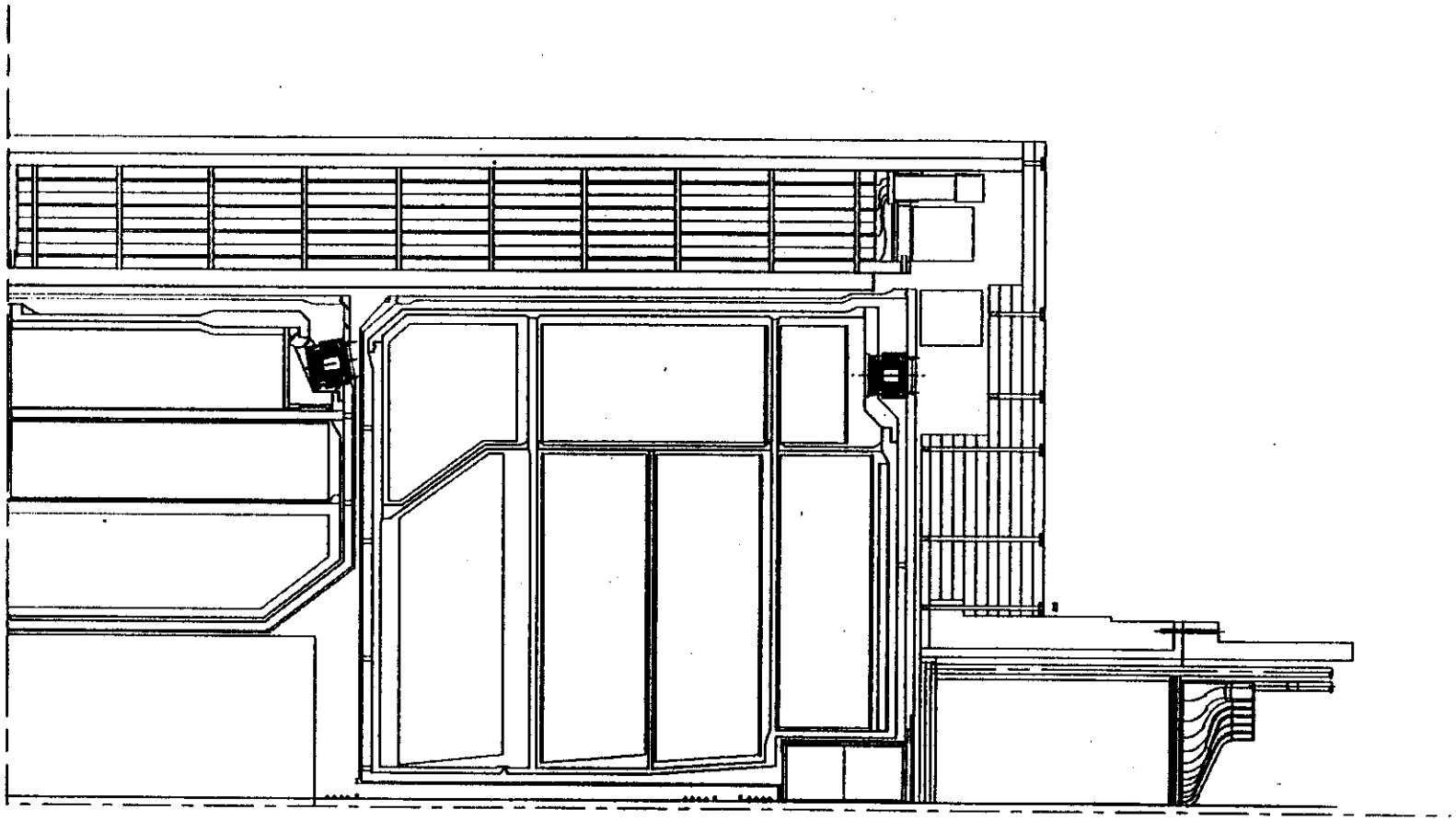

Ovrvw.Blwsf/t

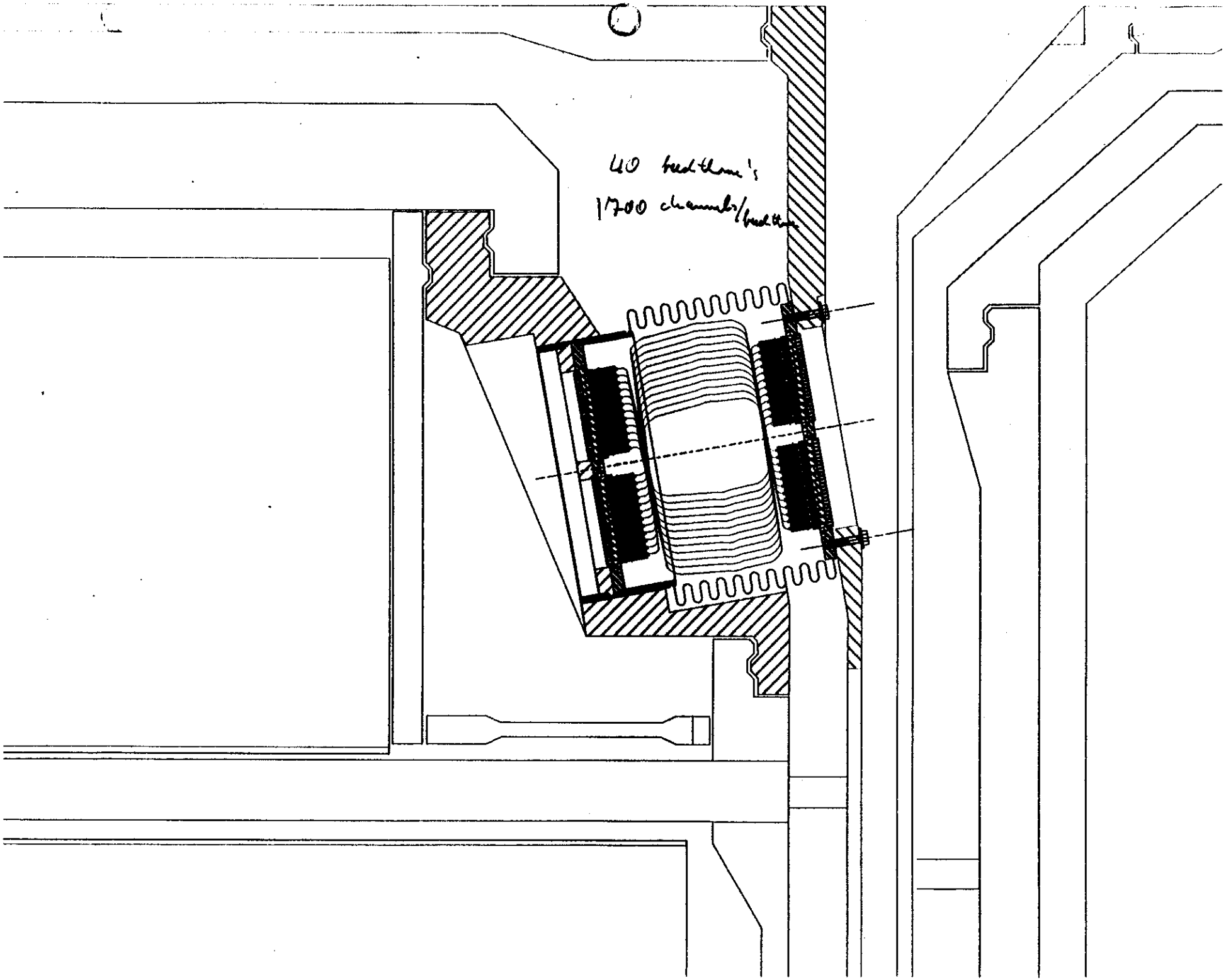
40 feedthrough's
1700 channels/feedthrough

Cell Orientation in Modules

Segmentation ($\eta \times \varphi$)

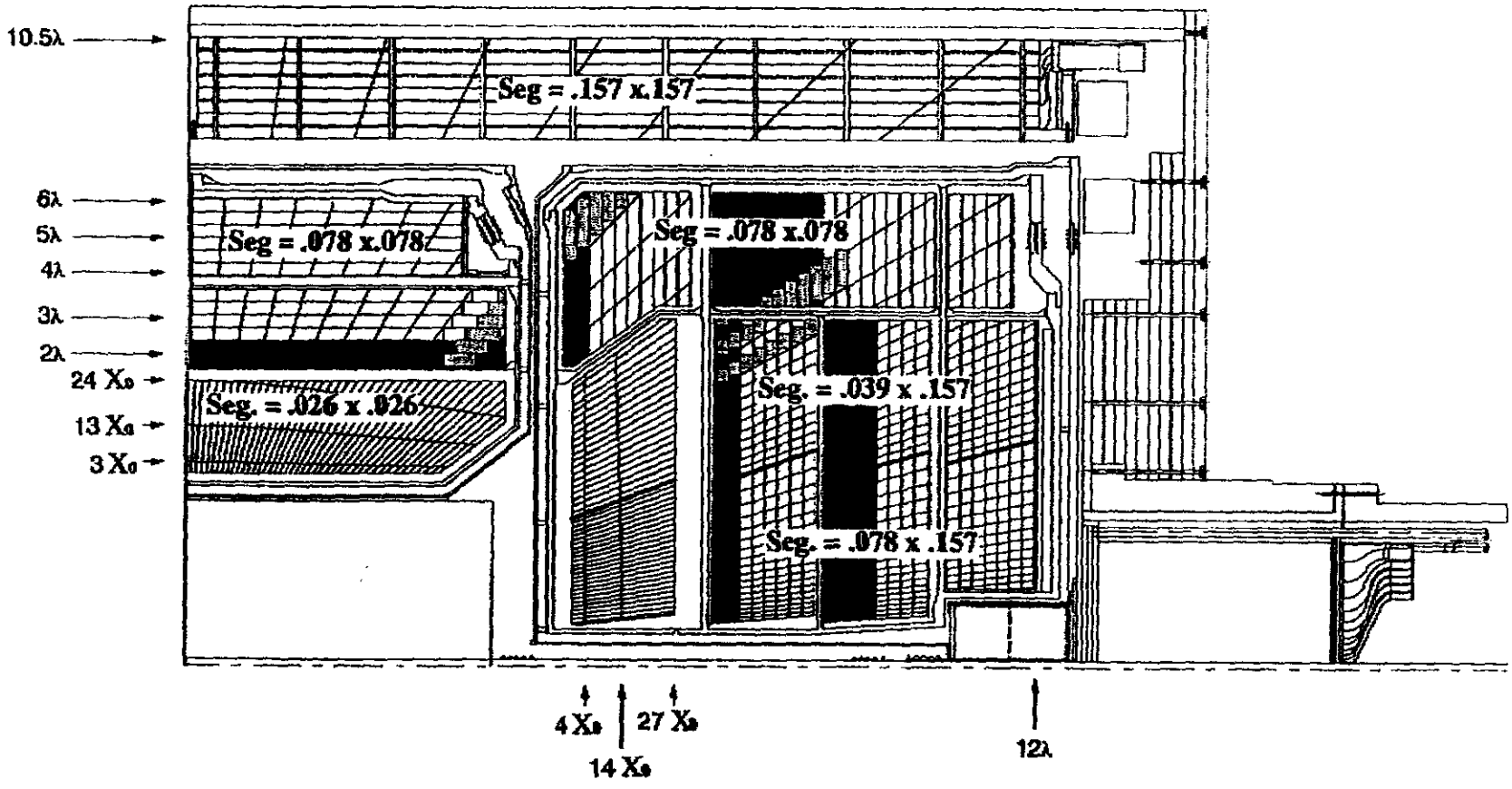

Remstable: Segmentation: 930520

Barrel Calorimeter Segmentation

Segmentation ($\eta \times \varphi$)

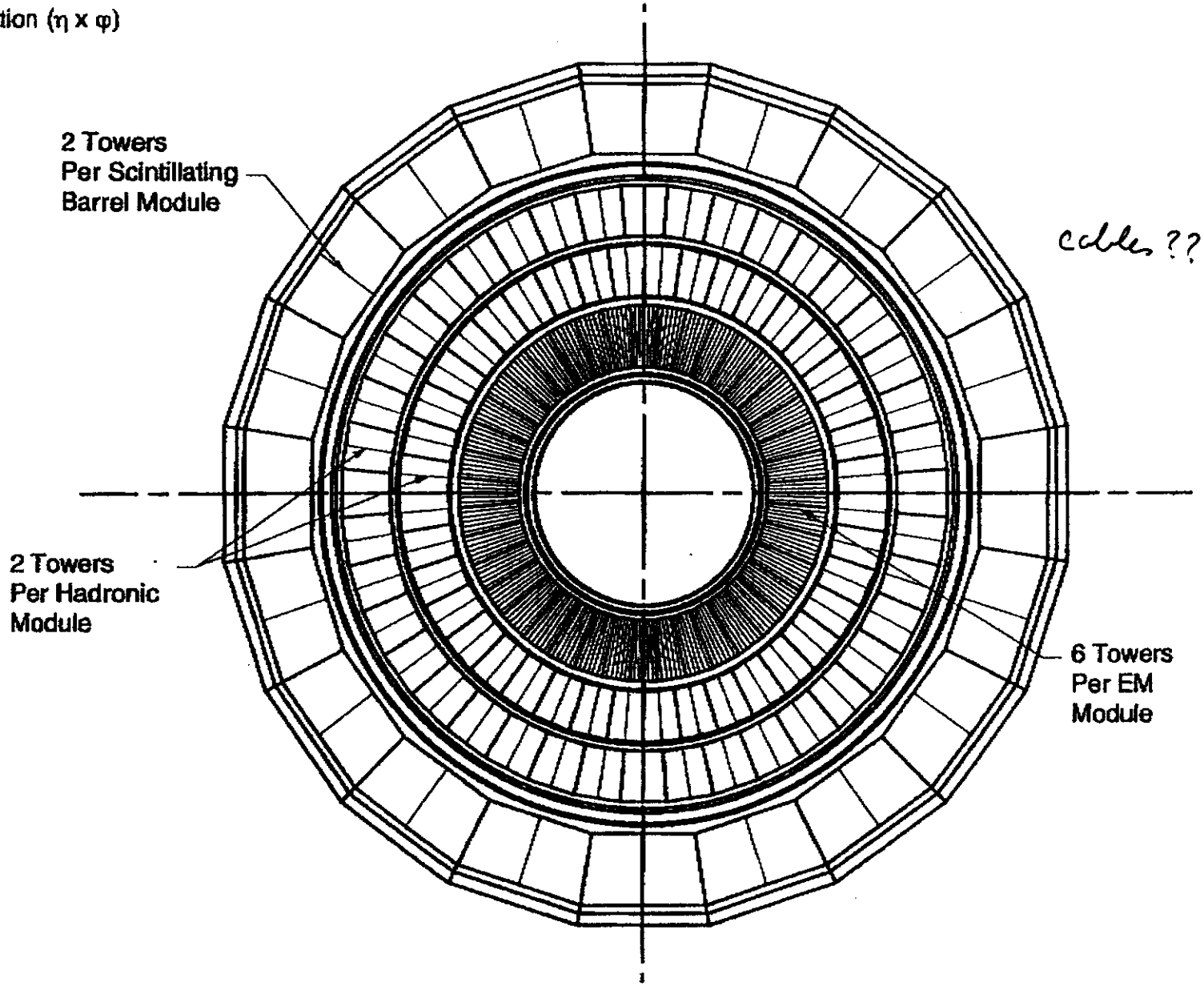

cables ??

Barnstable: Barrel Phi Seg:930520

Design Considerations for EM Calorimeter:

Energy Resolution

Jet Rejection

π° Rejection
Isolation criteria

Position Resolution, Pointing

Mass Resolution

Acceptance

EM OPTIMIZATION:

1) **Krypton vs. argon in the barrel and endcap**
2) **Transverse segmentation**
3) **Longitudinal segmentation**
4) **Strips in the 1st longitudinal section**
5) **Massless gap**
6) **Total depth of the EM calorimeter**
7) **Barrel to endcap transition**
8) **Calibration**
9) **Dynamic range requirements:**

   Dynamic Range 2^{18}

10) **Failure analysis**

    The effects of missing channels on the physics performance.

11) **Mechanical tolerances on the uniformity**

EM Accordion Segmentation

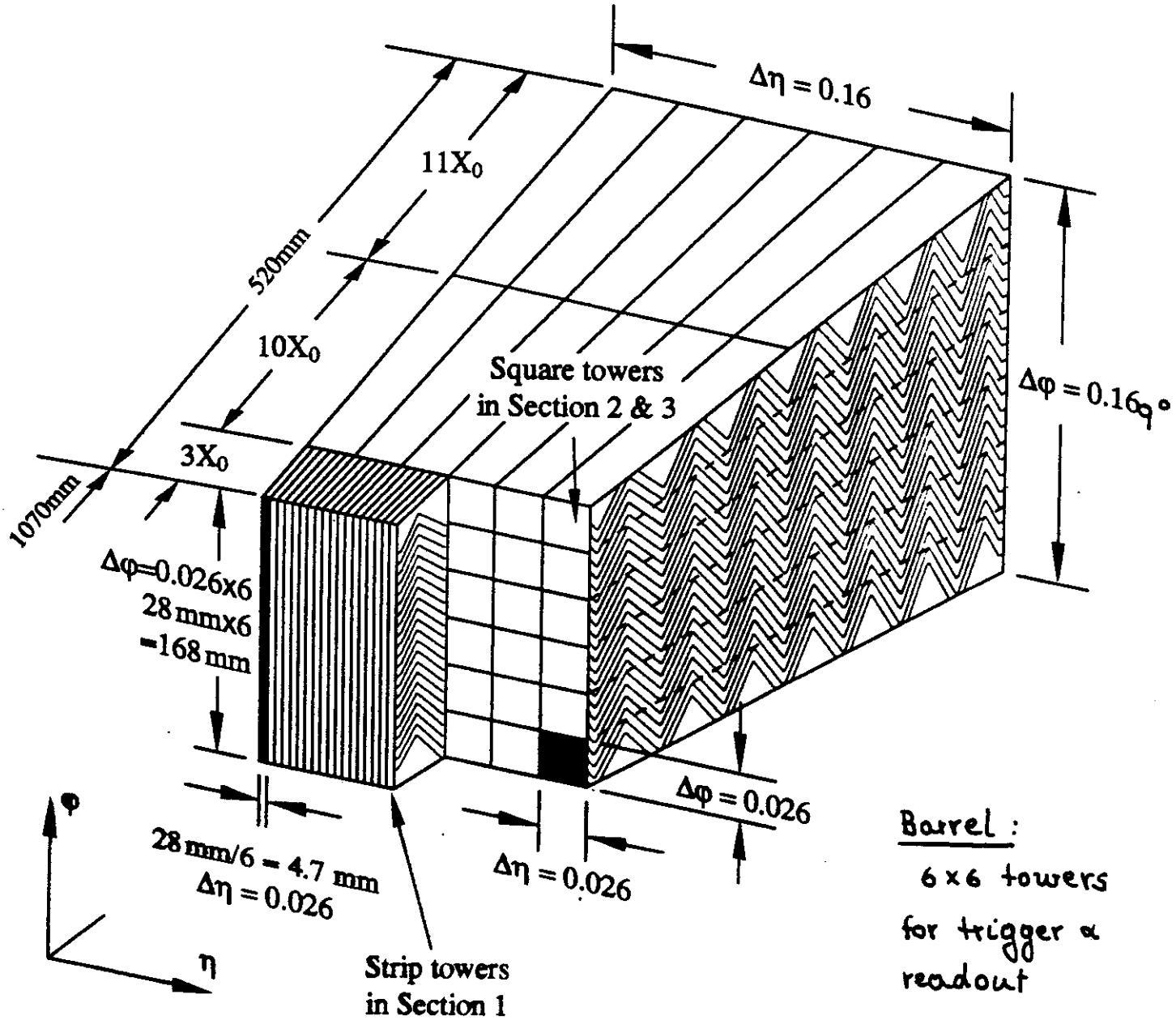

Barrel:

6 x 6 towers for trigger & readout

2 x 7 x 40 = 560 "6x6 uni"

20,160 EM towers

60,480 EM channels

$n_{had} = \frac{1}{9} n_{EM}$

EM Accordion Electrodes
1st Section ($3X_0$), $\delta\eta$ Strips

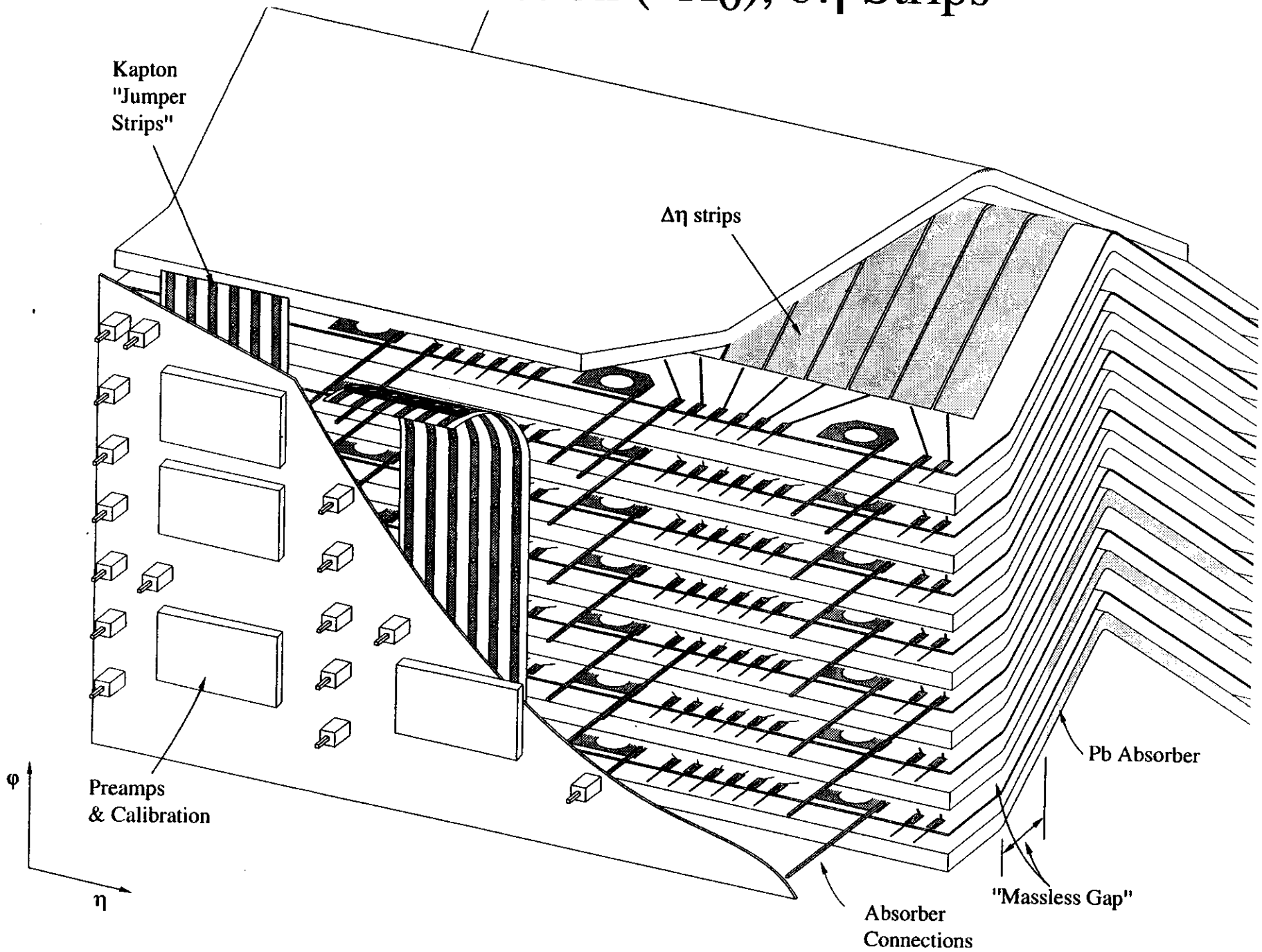

Barrel Electromagnetic Module

Two end modules ready for '95

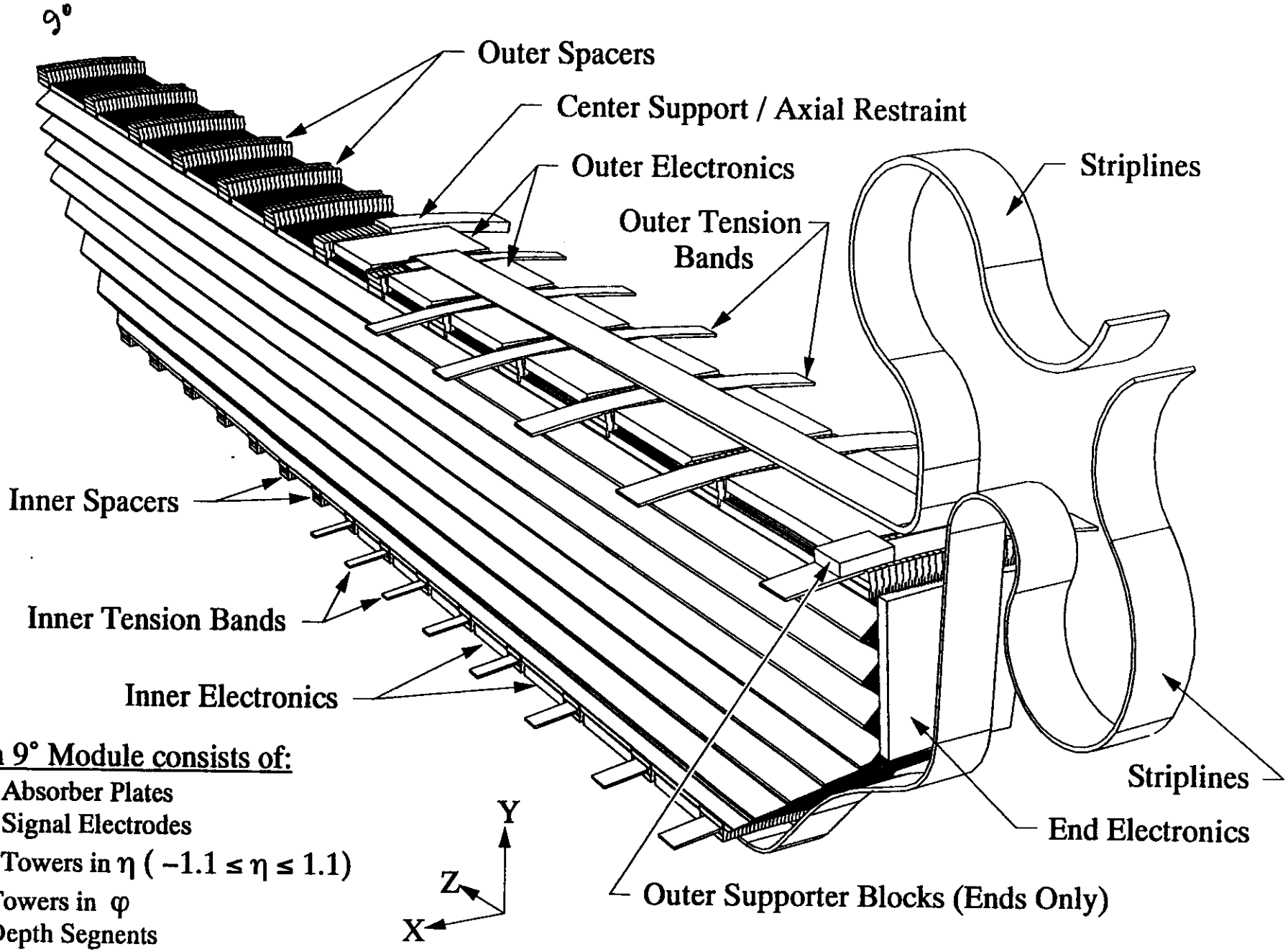

Each 9° Module consists of:

- 24 Absorber Plates
- 24 Signal Electrodes
- 84 Towers in η ($-1.1 \leq \eta \leq 1.1$)
- 6 Towers in φ
- 3 Depth Segnents

Signal Electrode (Barrel)

(Flat and at Room Temperature)

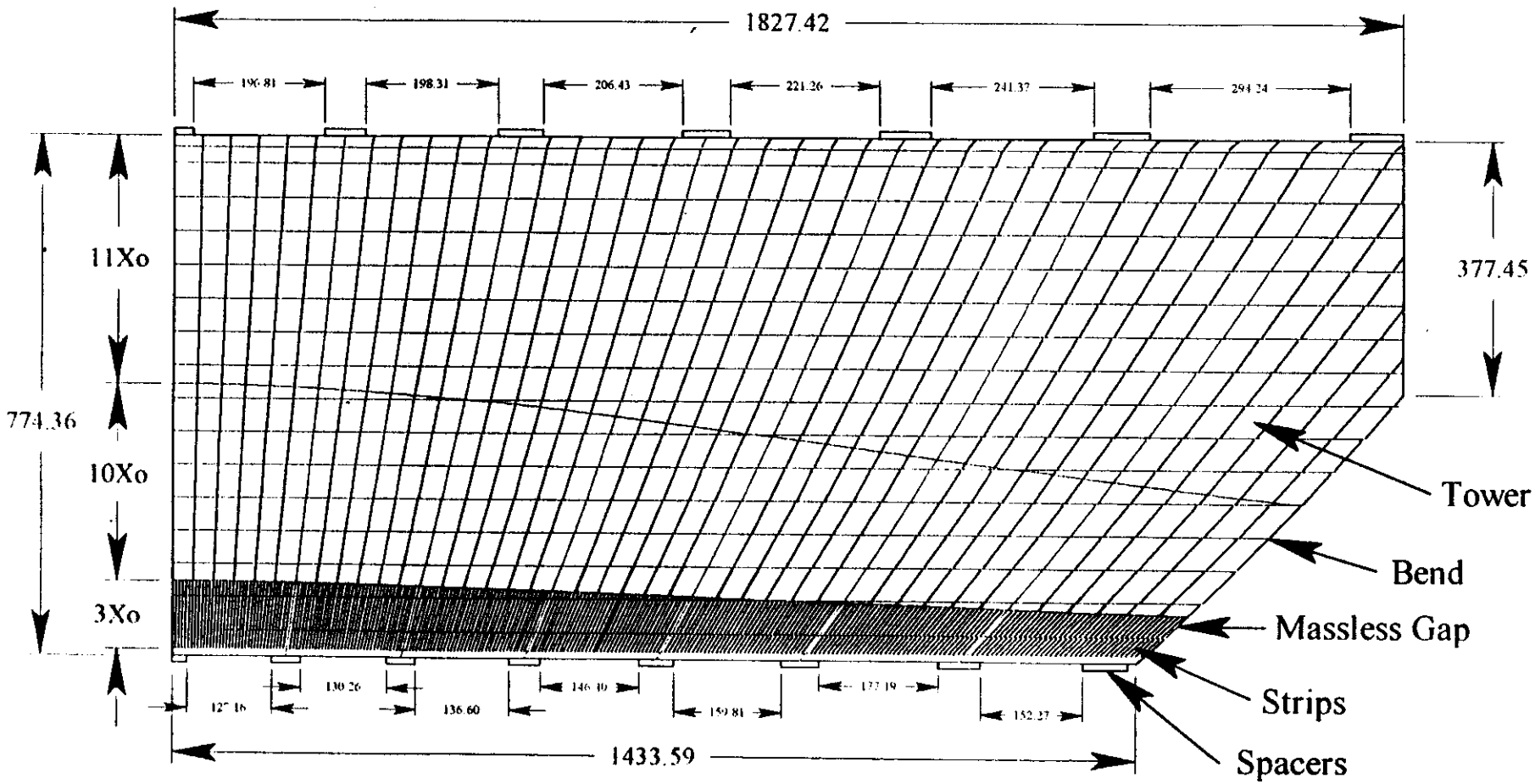

960 Signal Electrodes in Barrel

DSM
4/12/93

Conceptual Drawing
Barrel Signal Electrode

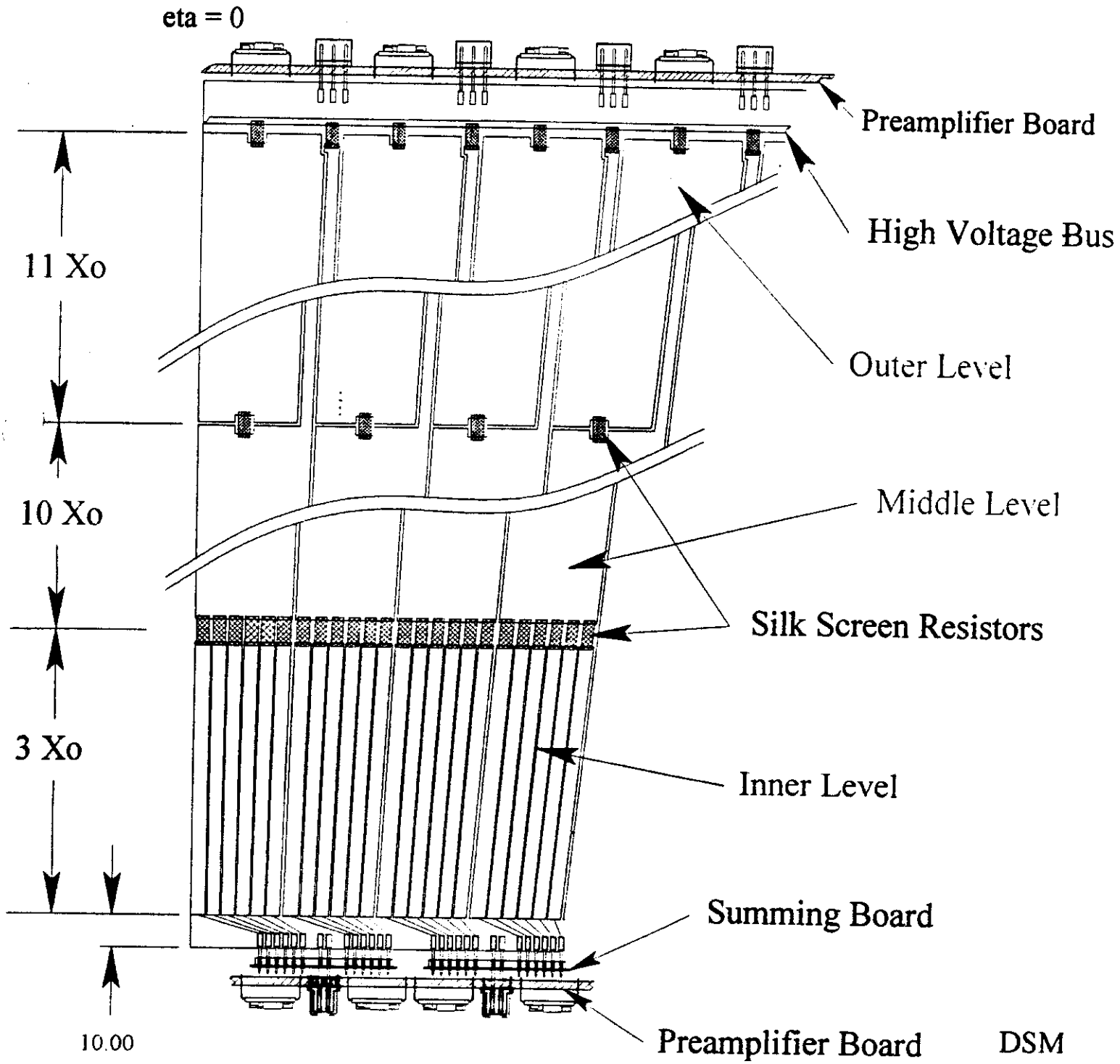

DSM
3/5/93

EM Tower Parameters at θ=90°

θ=90°	Length (X_0)	$\Delta\varphi$	$\Delta\eta$	Electrode Length (cm)	Gap Area (cm^2)	Cap. (pF)	σ_{el} [MeV] Energy Resolution (40 ns)
FRONT	3	0.15708	0.00436	11.7	4.7	400	7.7
MIDDLE	10.3	0.02618	0.02618	30	100	650	8.4
BACK	11	0.02618	0.02618	32.2	126	800	10

15 MeV/tower

EM Tower parameters at θ=40°

θ=40°	Length (X_0)	$\Delta\varphi$	$\Delta\eta$	Electrode Length (cm)	Gap Area (cm^2)	Cap. (pF)	σ_{el} [MeV] Energy Resolution (40 ns)
FRONT	3	0.15708	0.00436	11.7	4.7	400	7.7
MIDDLE	10.3	0.02618	0.02618	30	94	650	8.4
BACK	25	0.02618	0.02618	73	194	1250	13

17 MeV/tower

Top view of Endcap EM Calorimeter

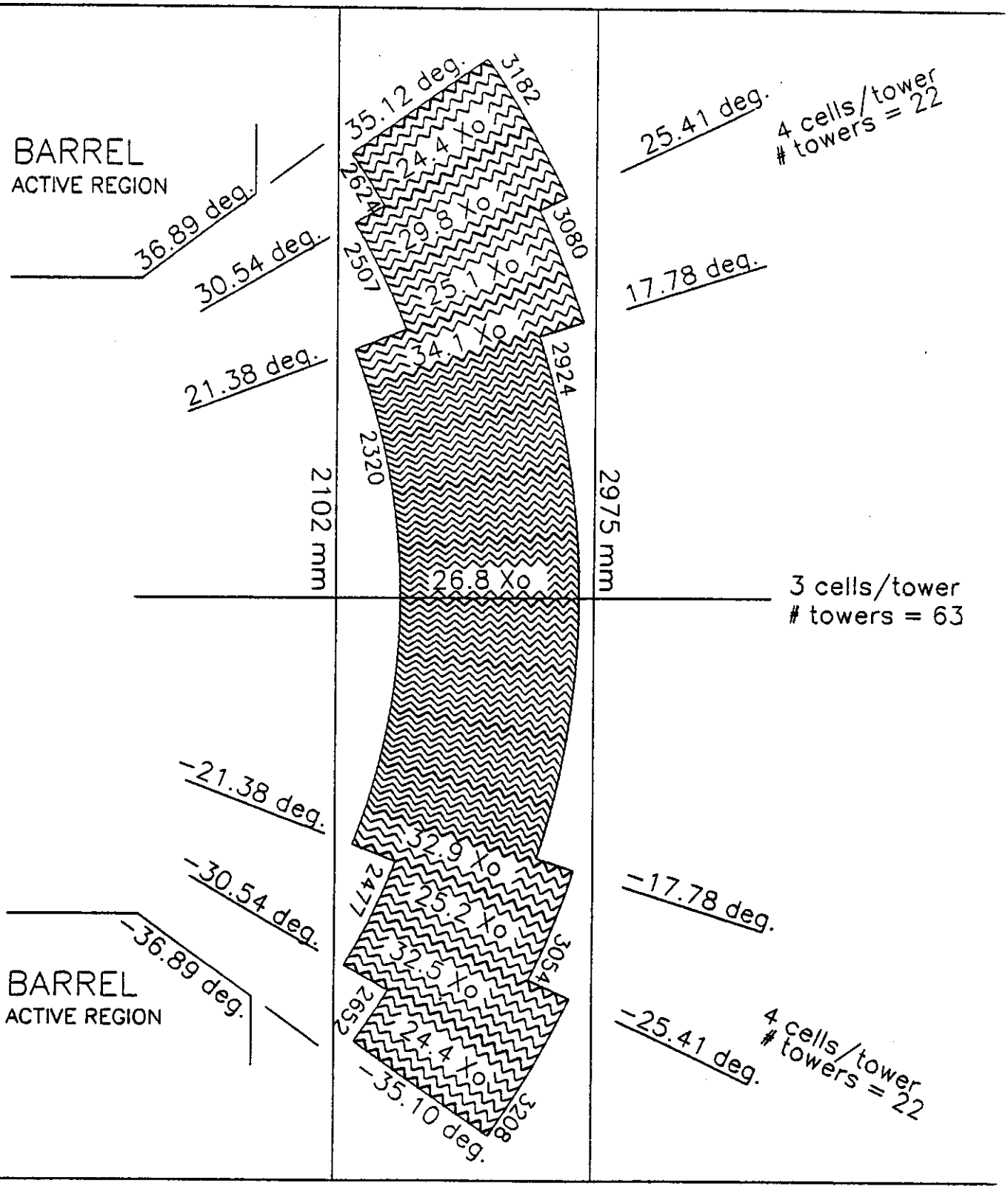

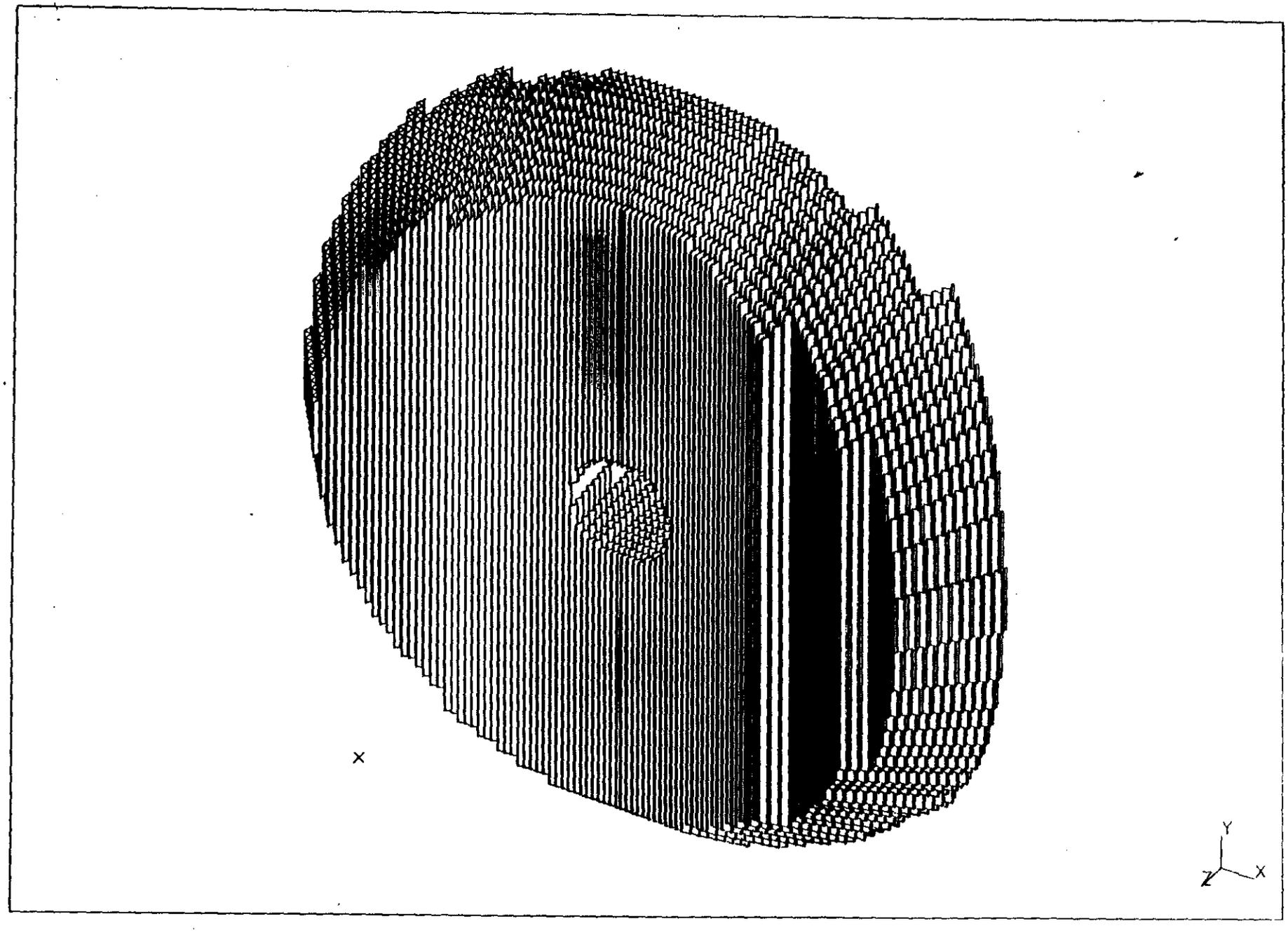
Y
Z
X

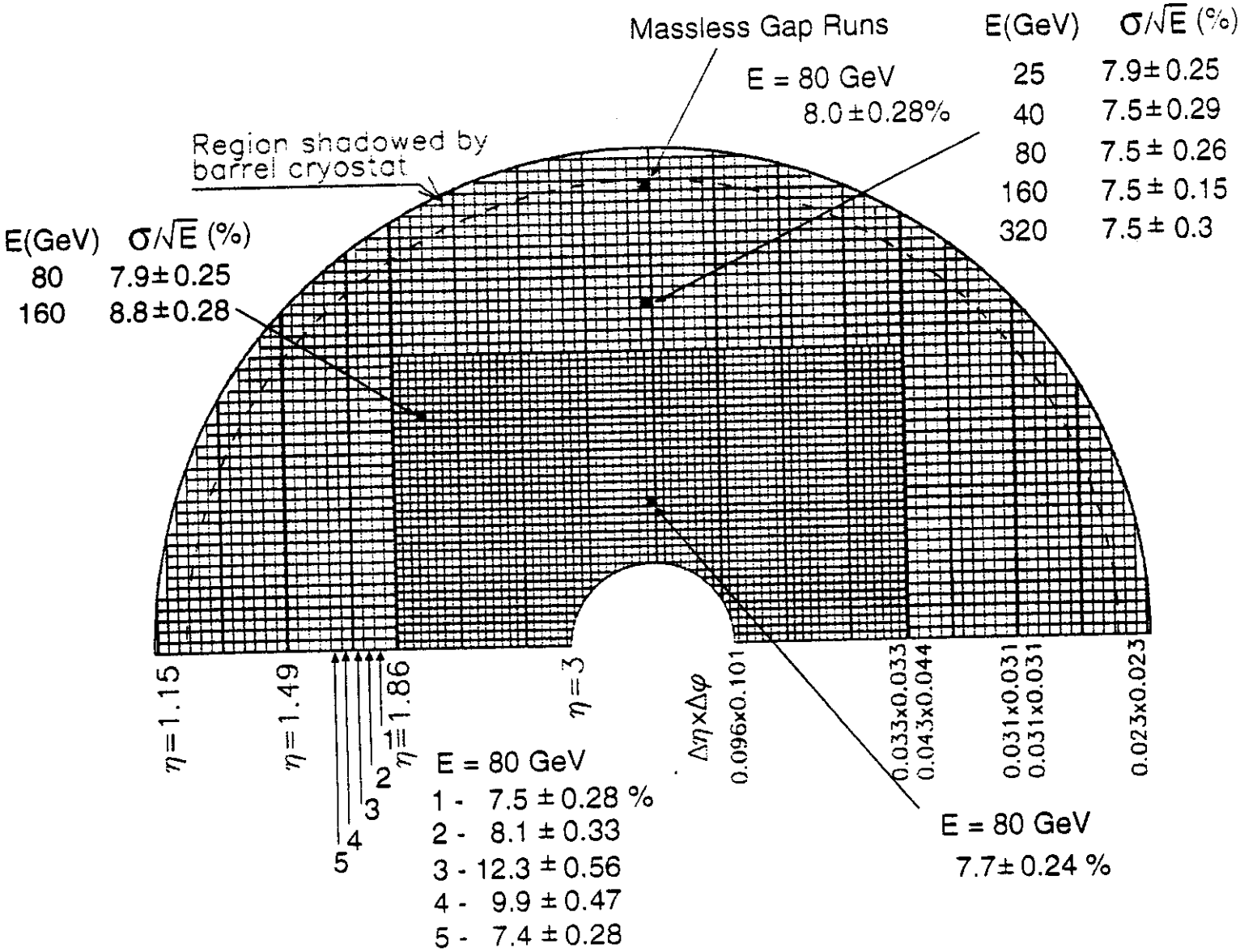

Number of channels: 1st 17528
2nd + 3rd 32384 } both endcaps

EM Endcap Calorimeter

Trigger Towers

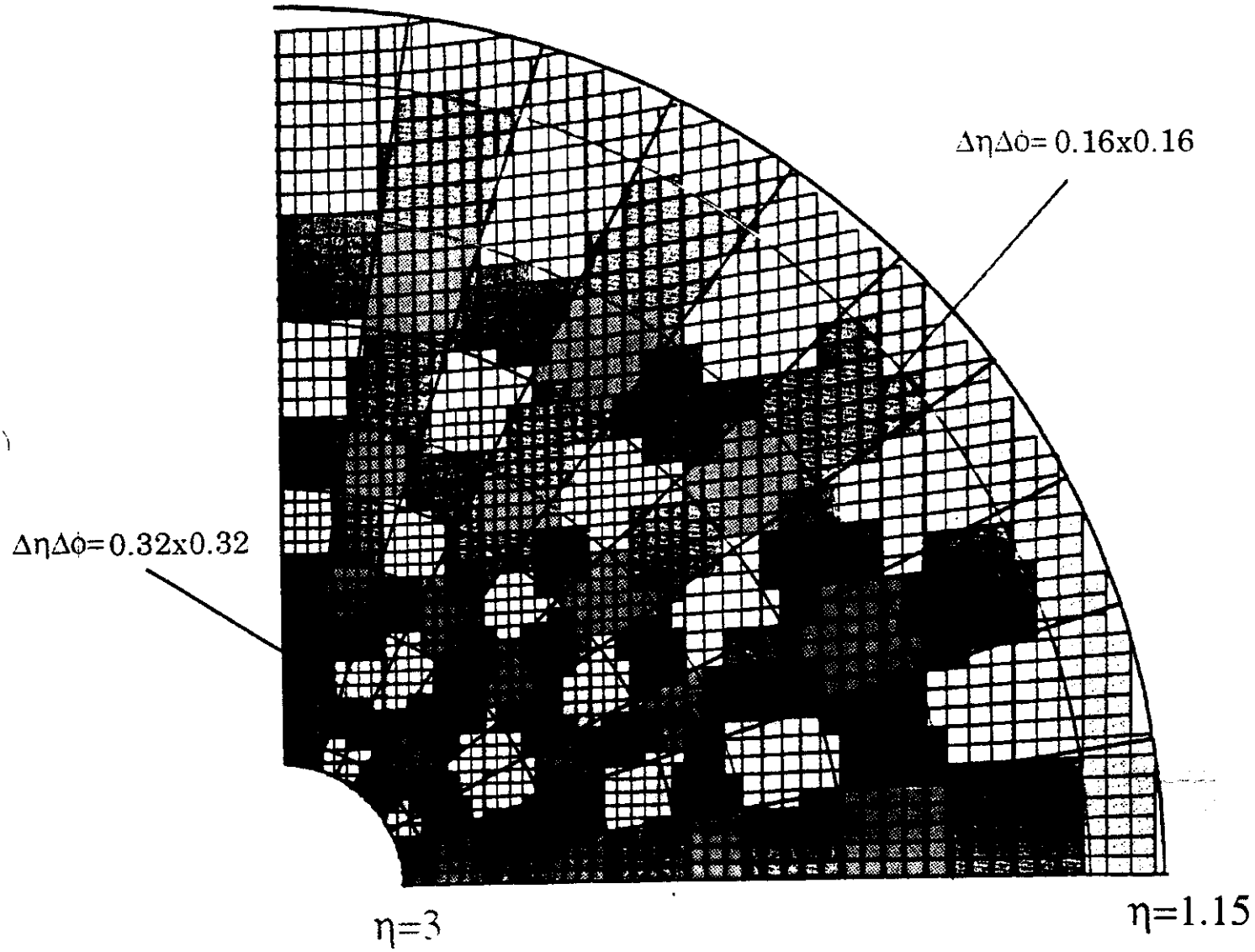

Endcap Signal Electrode

(Folded and at LAr Temperatures)

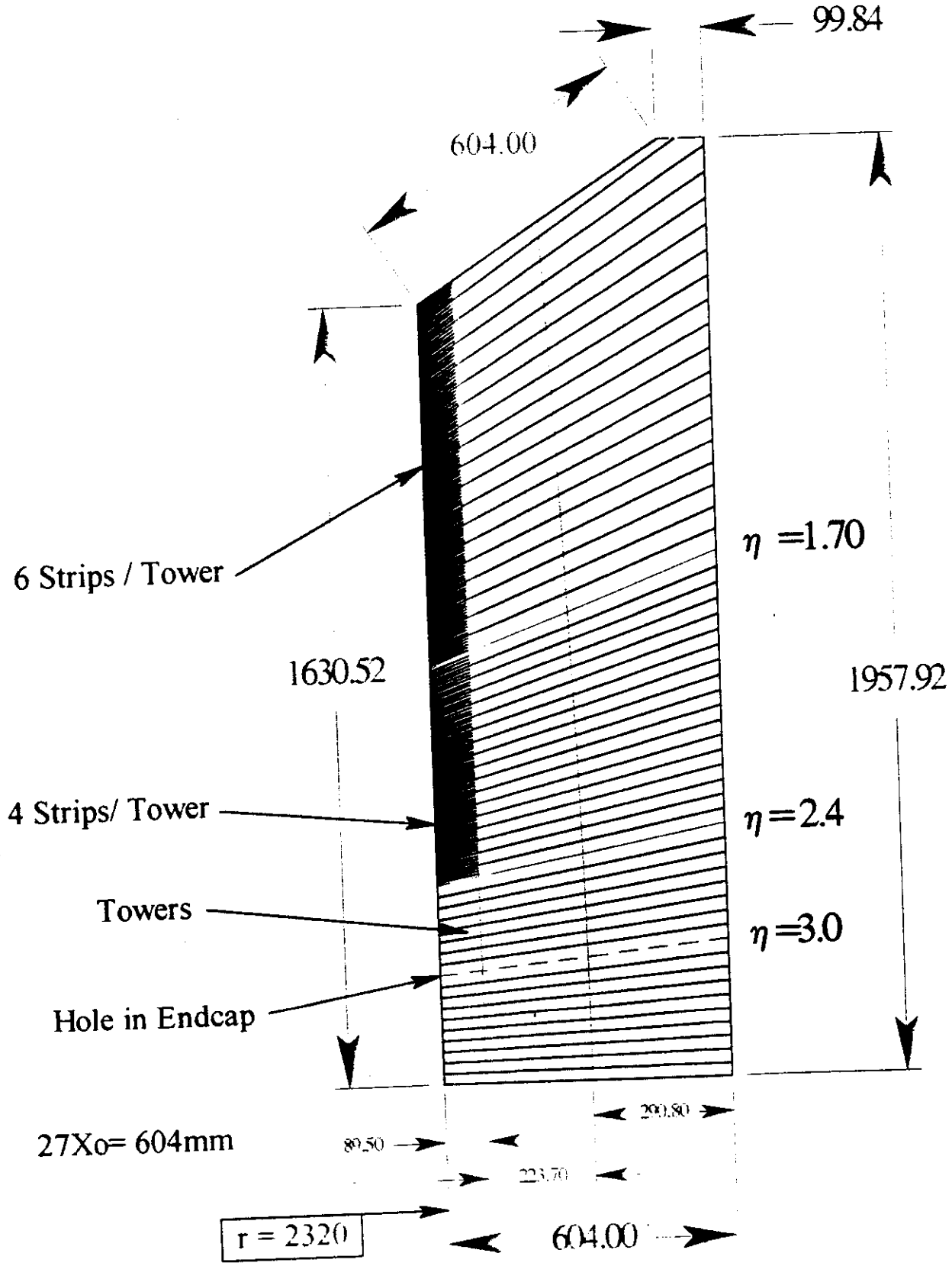

DSM
5/7/93

Inner barrel hadronic Module - Tiles

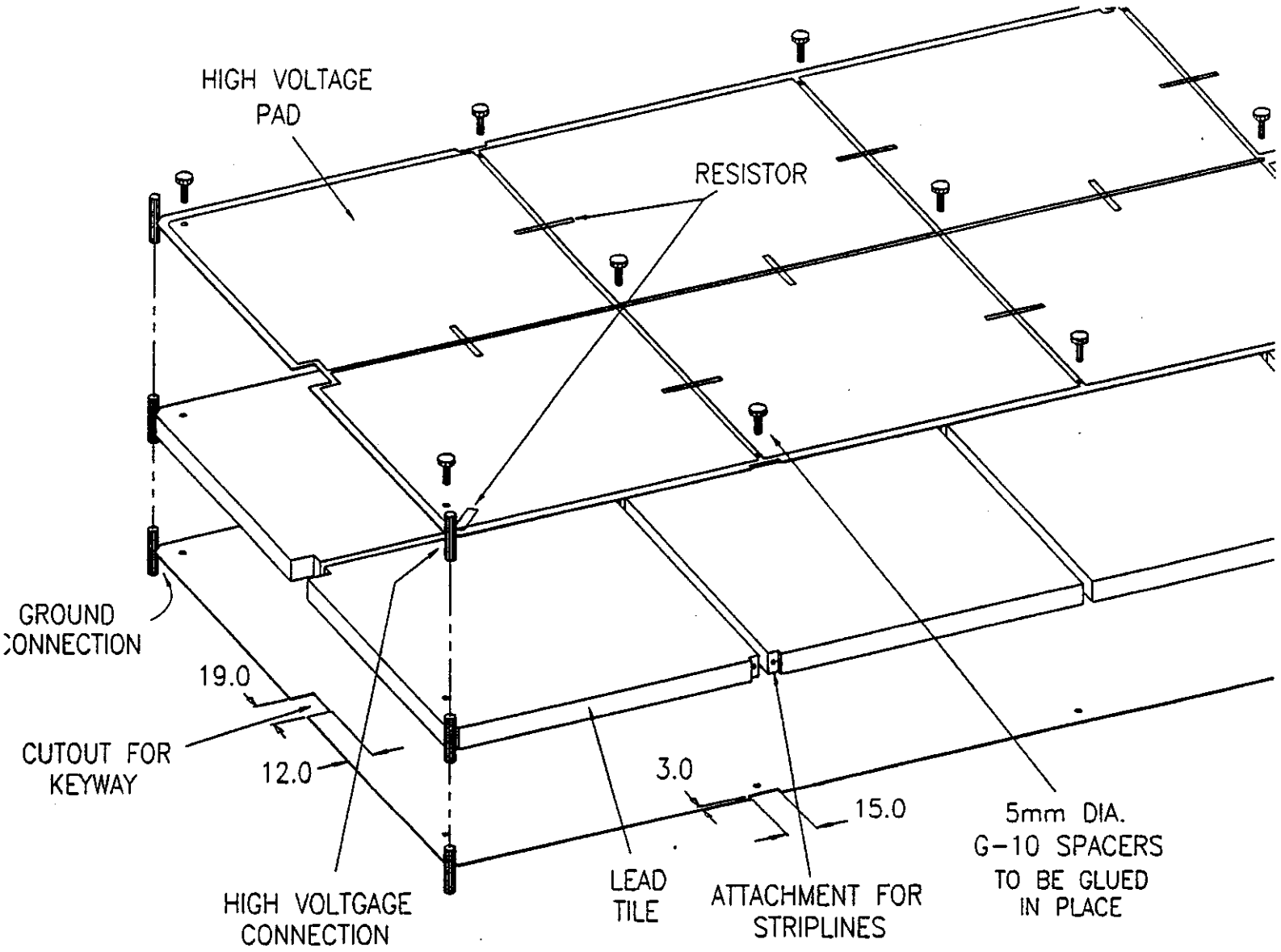

GEM27W__URHTTILECONCEPTREVB_.EPS
3-25-93

Isometric view of barrel hadronic module

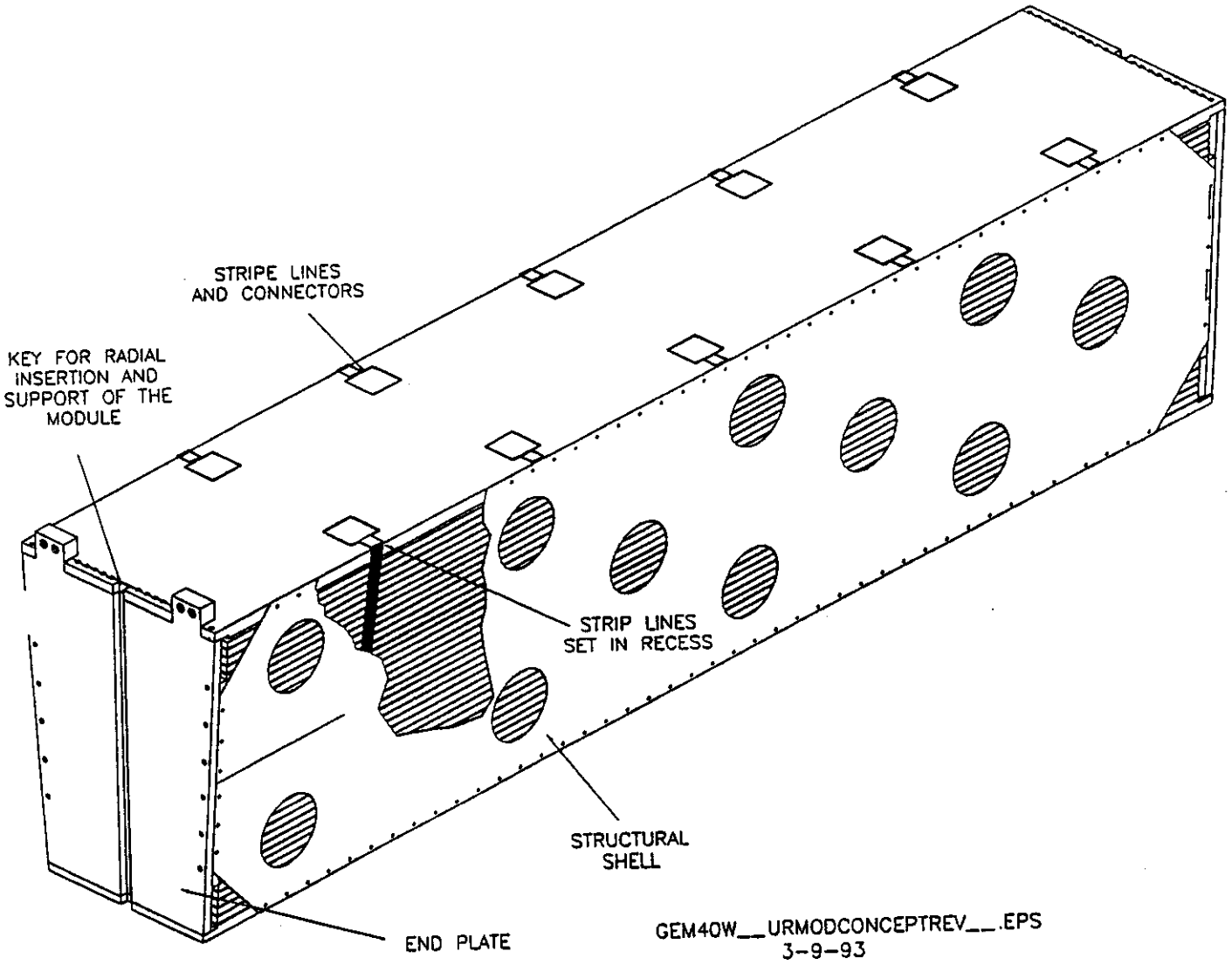

ELECTROSTATIC TRANSFORMER CONFIGURATION

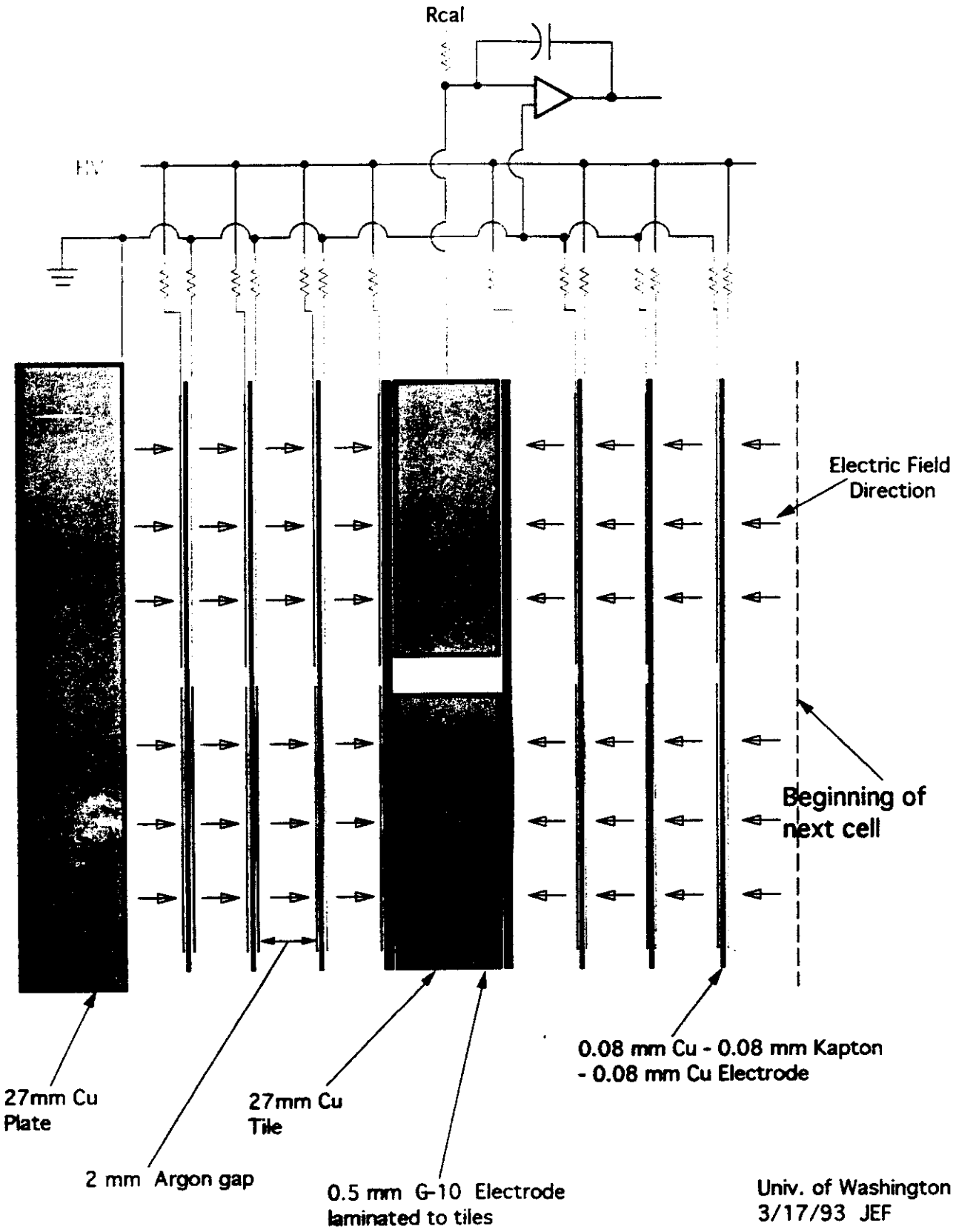

Univ. of Washington
3/17/93 JEF

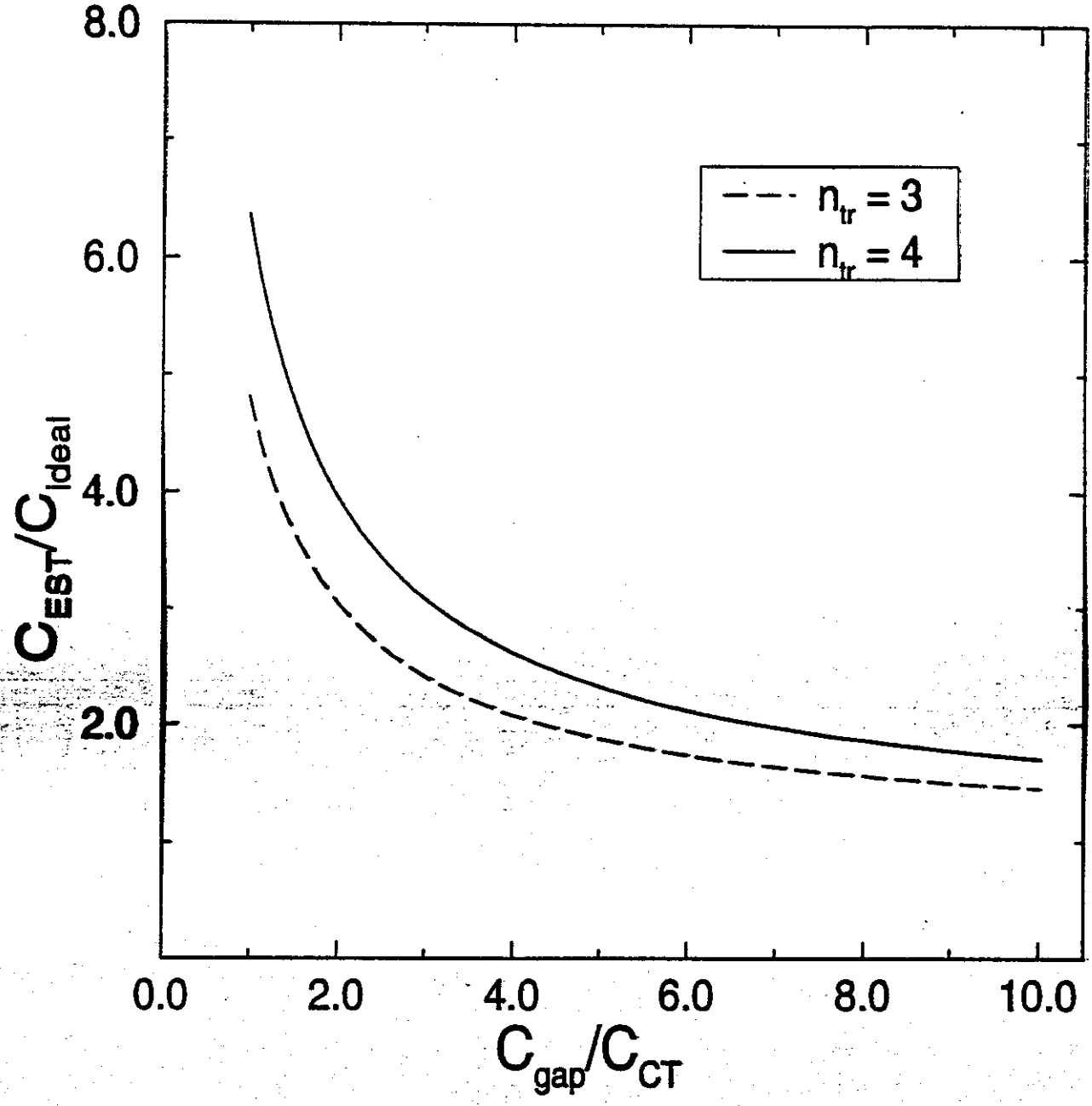

EST capacitance dependence on the transformer ratio n_{tr}, gap capacitance C_{gap} and tile-to-tile capacitance C_T .

Hadronic Endcap Module

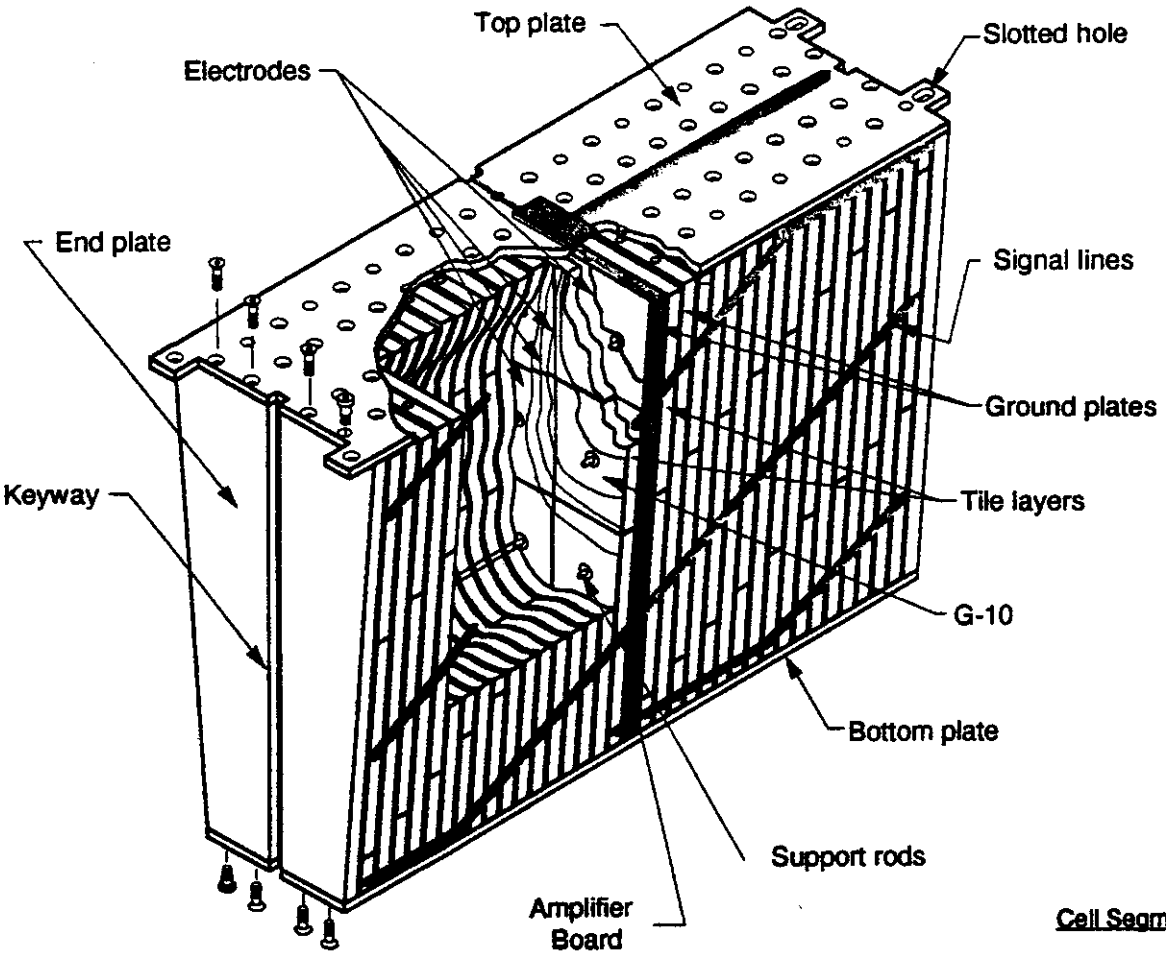

Cell Segmentation

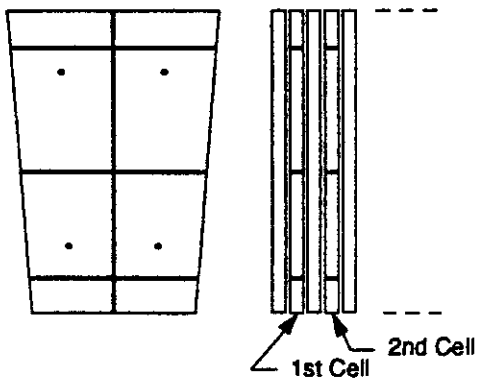

University of Washington
5/6/93 DAF

Hadronic Calorimeter Parameters at θ=90° (n_{tr}=3)

θ=90°	$\Delta\eta \times \Delta\varphi$	λ	Number of ET cells (n_{tr}=4)	Average Width (φ) (cm)	Average Length (θ) (cm)	Cap. (pF)	Noise MeV (@ns)
HADR 1 FRONT	0.0785 x 0.0785	1.17	3	14	14	700	77 (100 ns)
HADR 1 BACK	0.0785 x 0.0785	1.56	4	16	16	1200	104 (100ns)
HADR 2	0.0785 x 0.0785	1.95	5	19.5	19.5	2050	80 (200 ns)

GEM FCal EM SECTION

Brass, quartz, argon: Only materials in very high radiation field

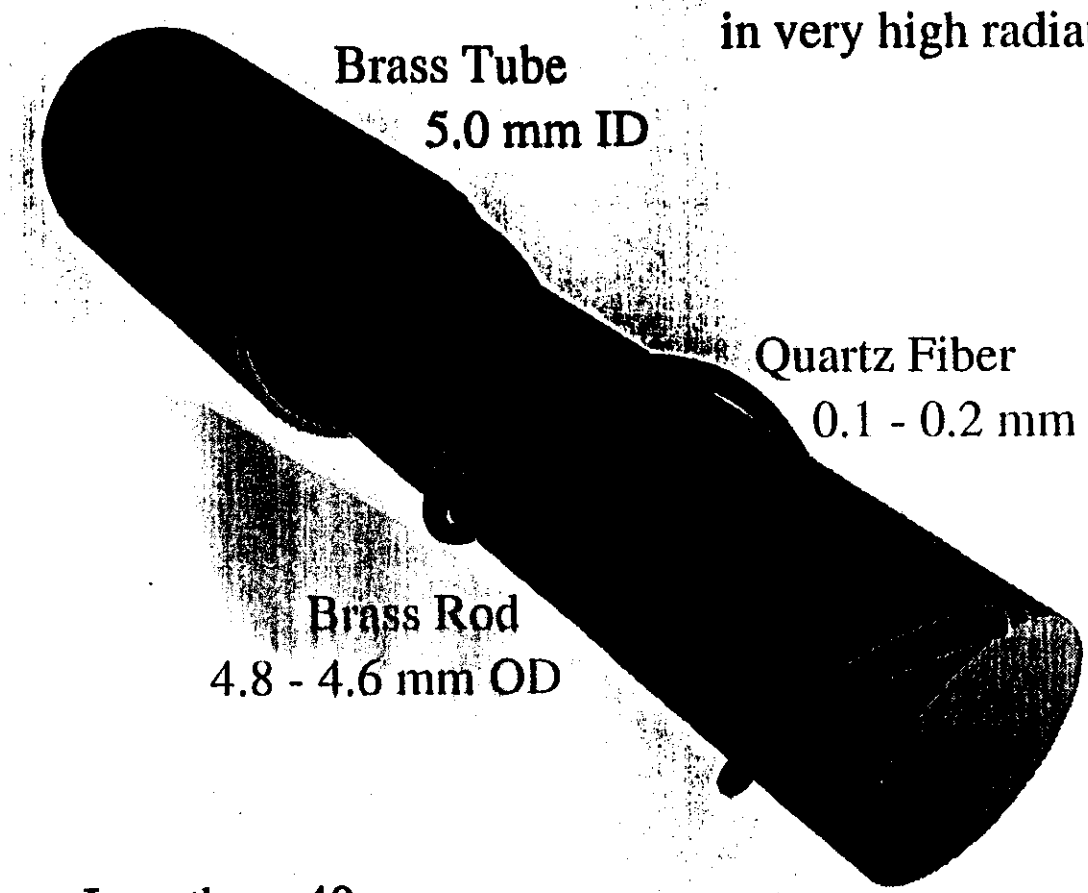

Simulation of induced radioactivity done contribution to noise like in U-calorimeter: not reaching level of 1 GeV

Length	40	cm	
Gap	100	200	μm
Impedance	2	4	Ω
Capacitance	800	400	pF
Sampling fraction	0.6	1.2	%
Electronics Noise	1.6	0.4	GeV in $2R_M$

Forward EM Module

Front Face - Close-up

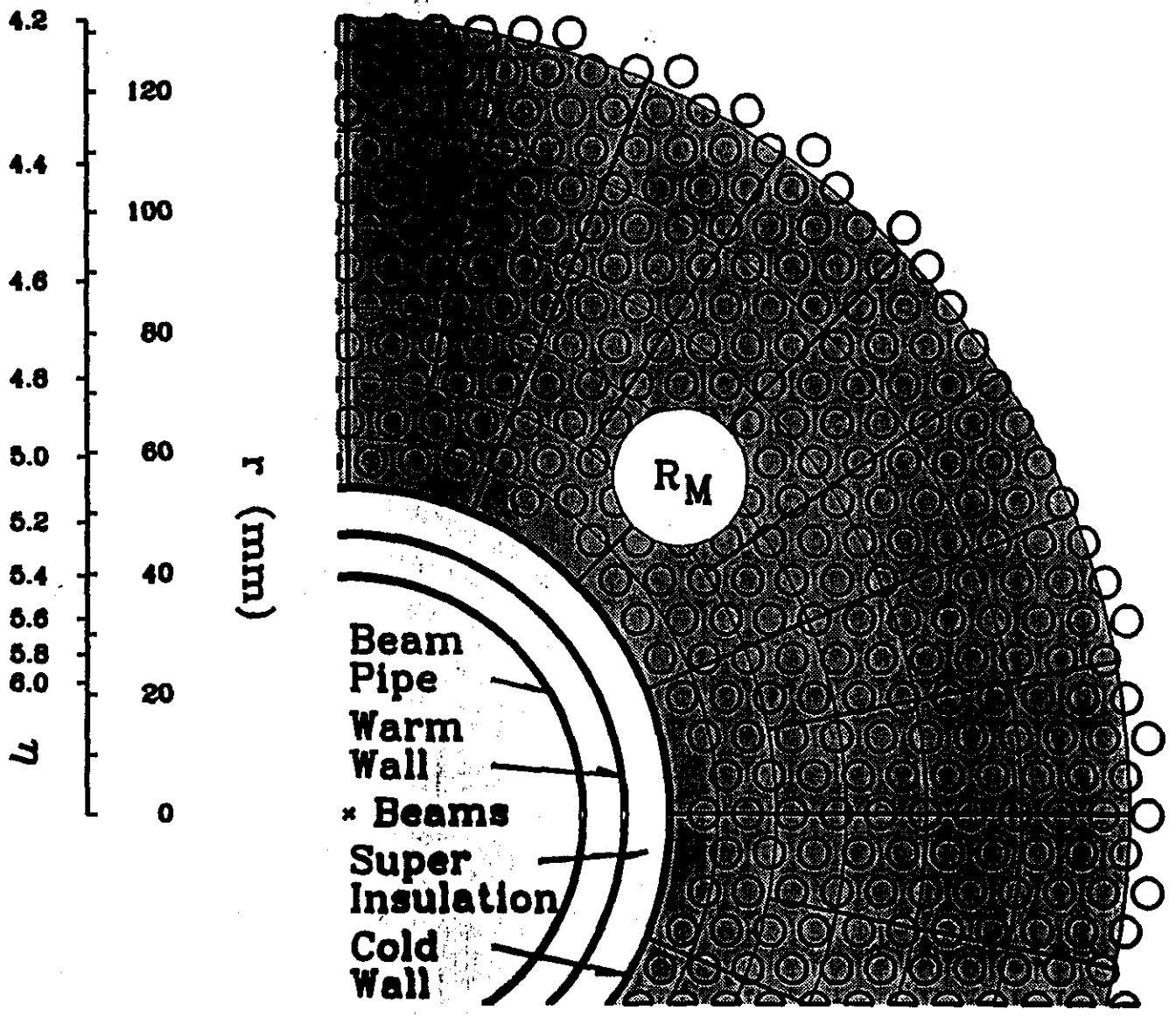

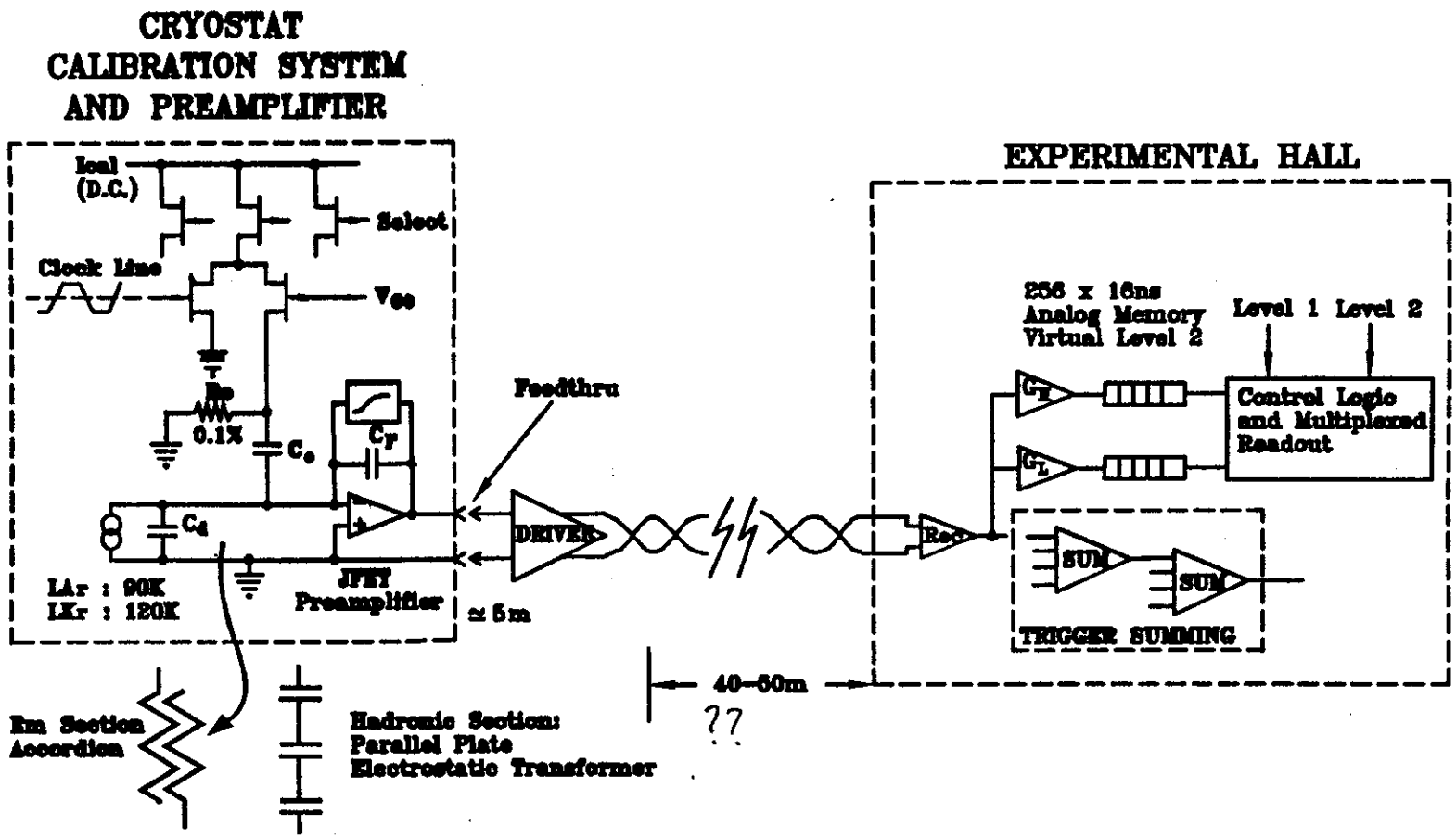

Calorimeter readout chain

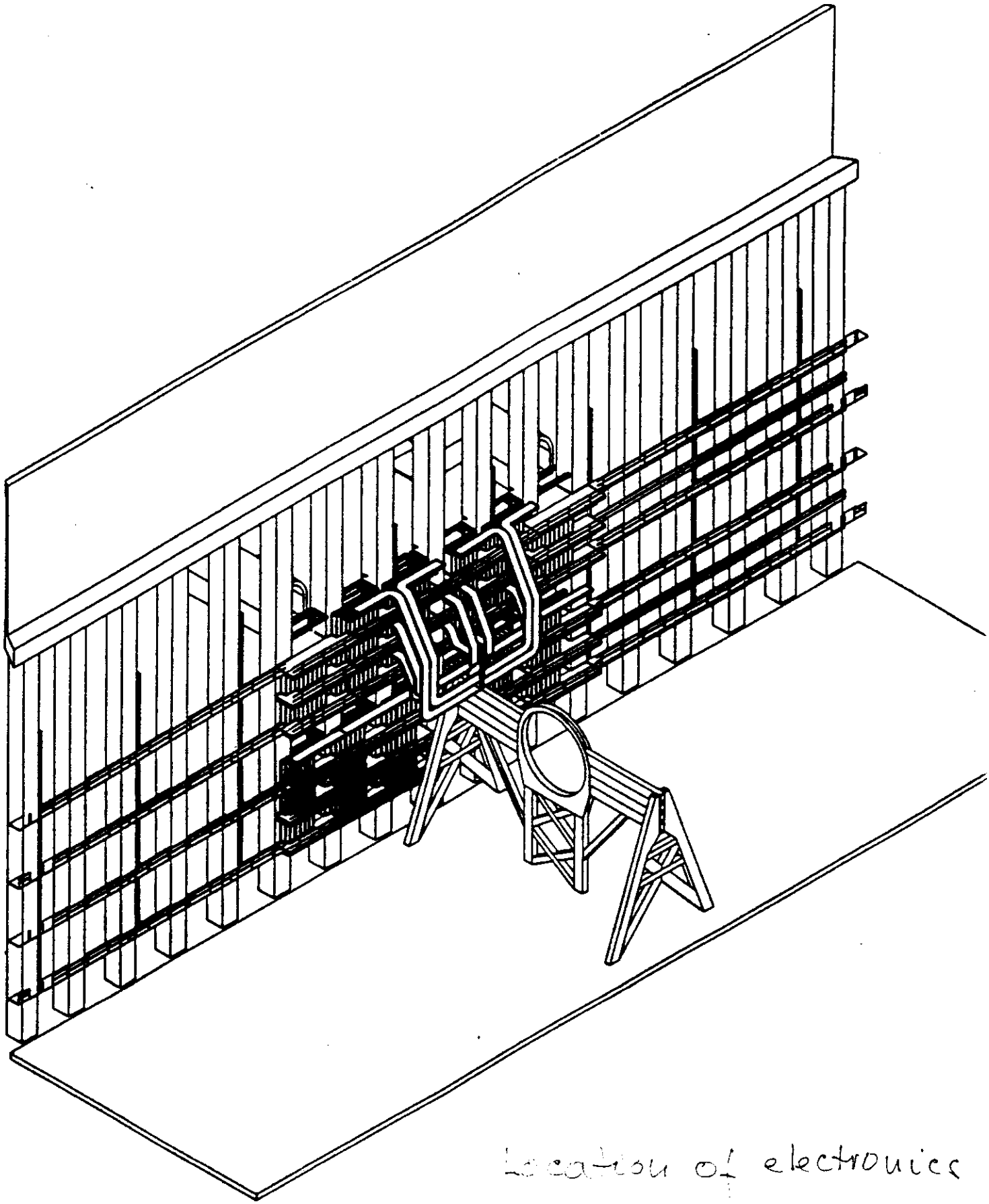

Location of electronics
in the hall

Energy in the peak channel of each layer, 10 TeV electrons

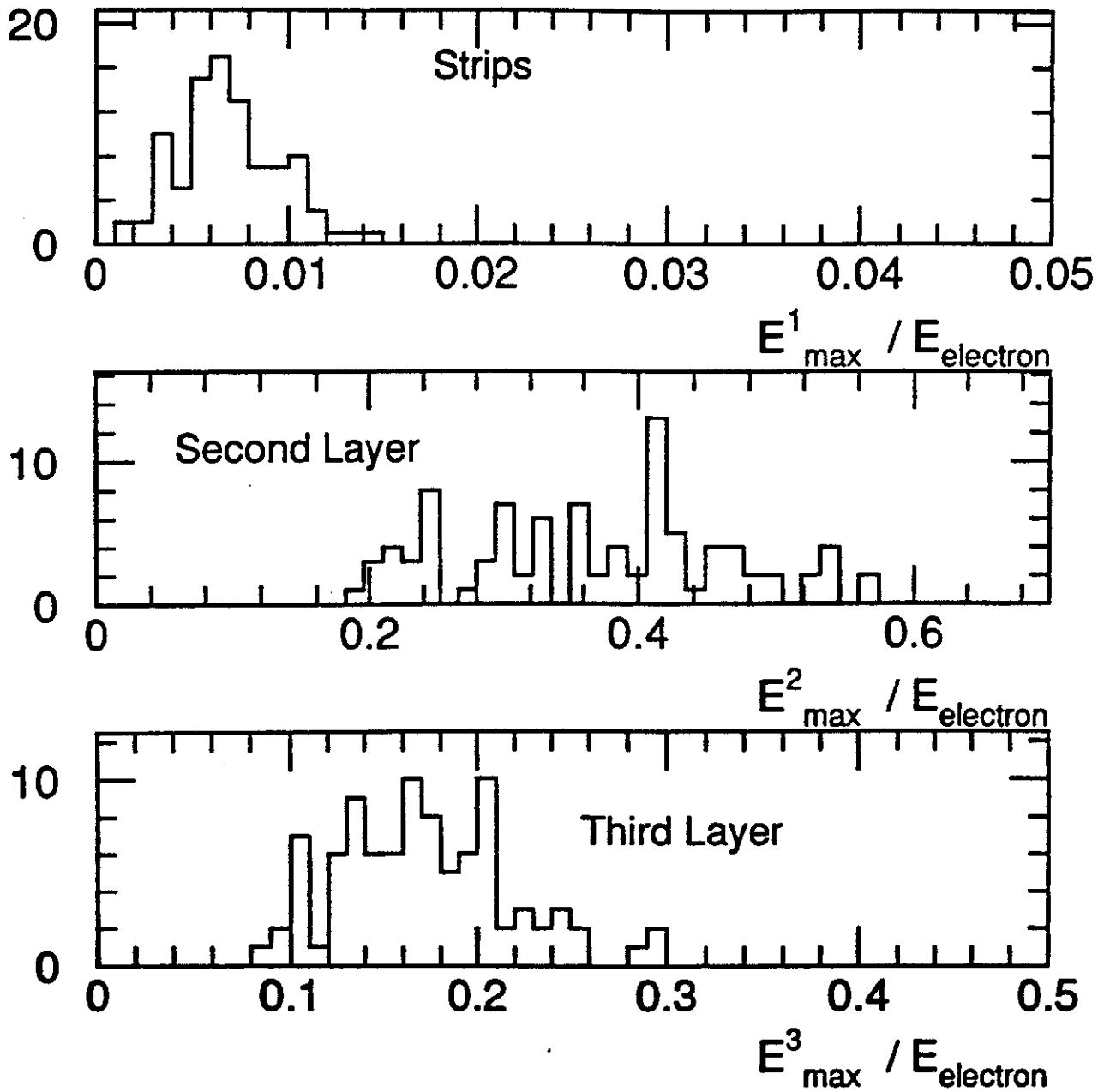

$0 < \eta < 1$ $\quad E_{electron} < 5$ TeV

$E_{2\,max} \approx 3$ TeV $\rightarrow$ 12 mA in LKr

Dynamic Range Compression

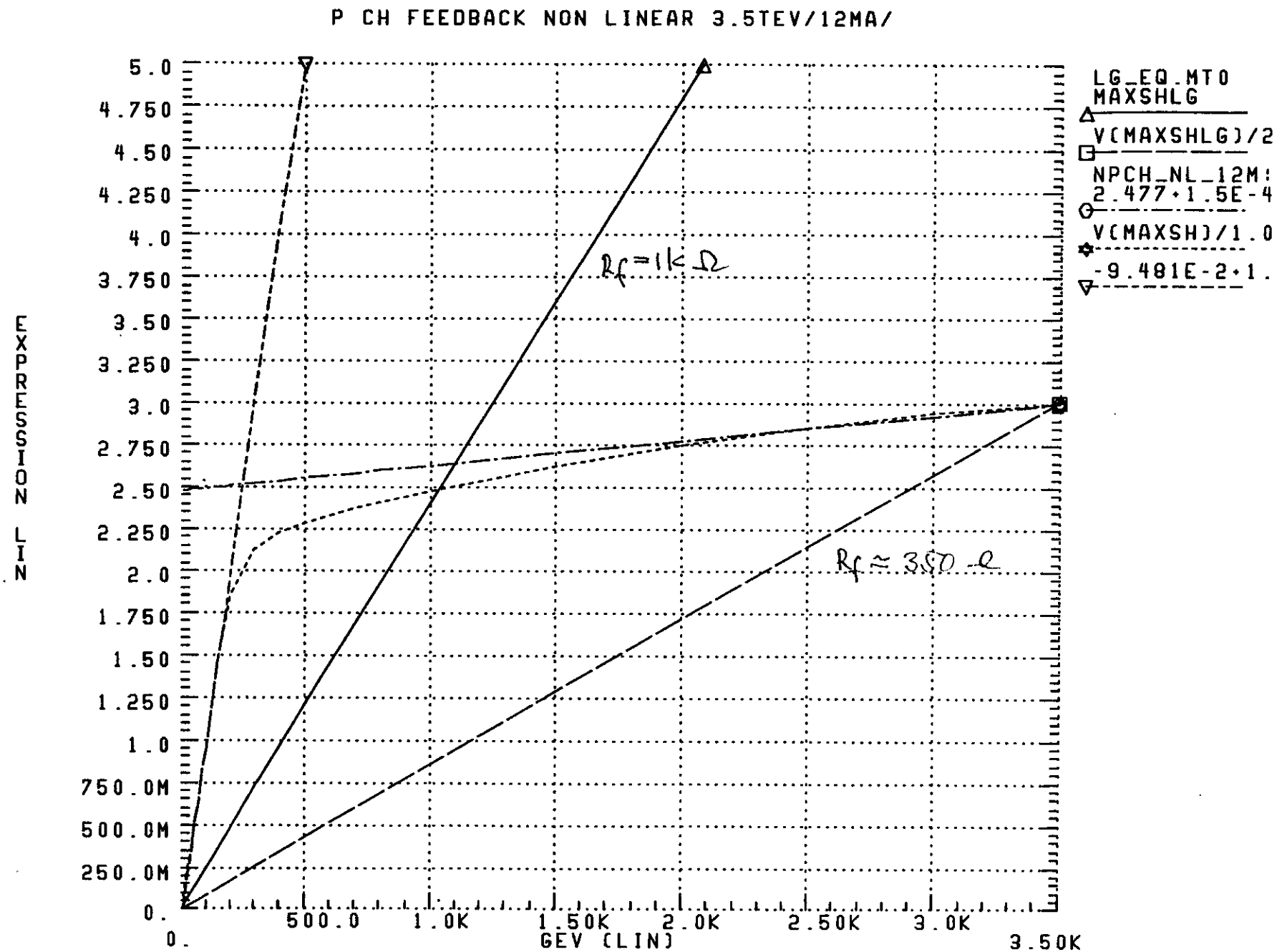

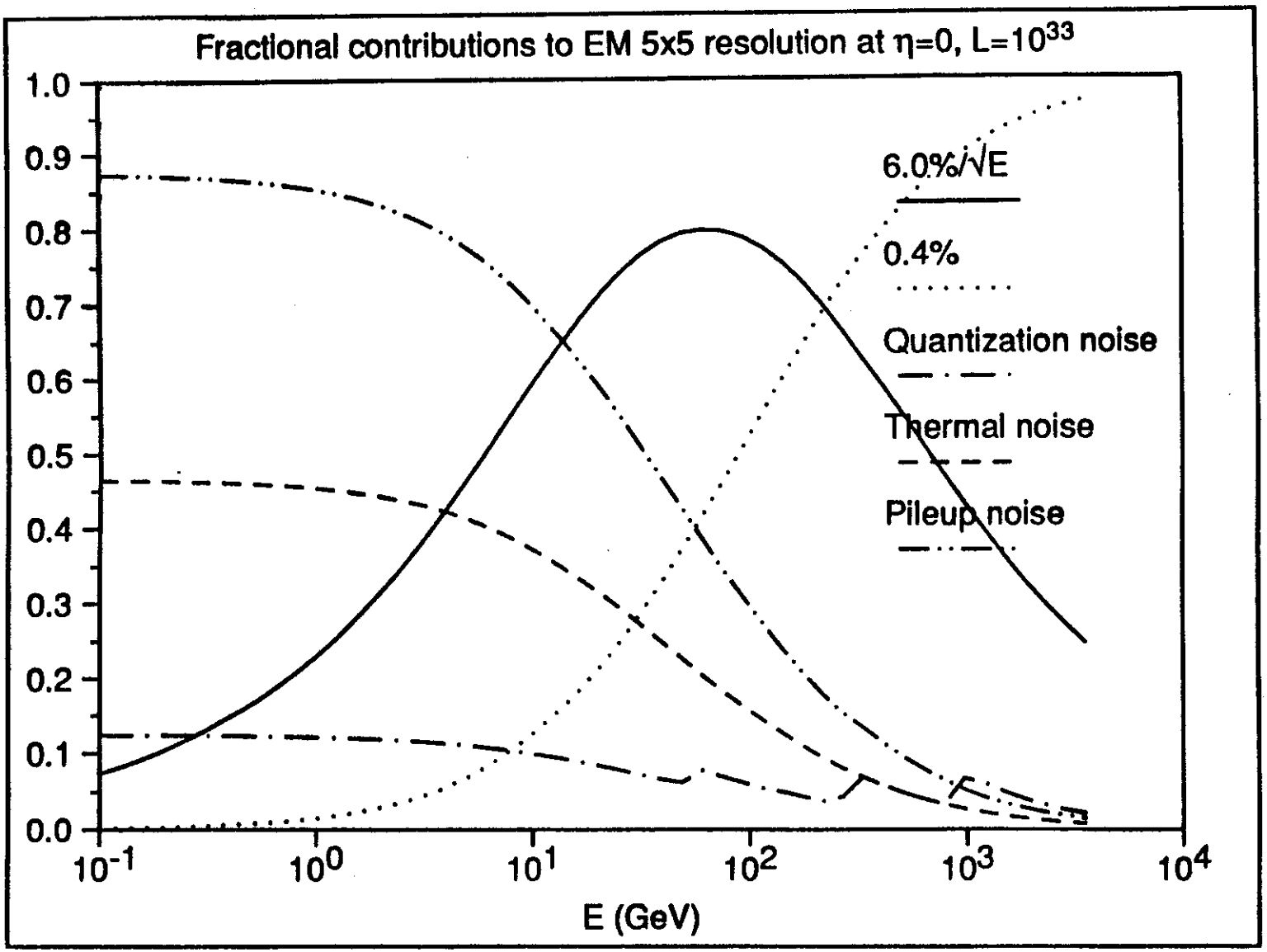
Fractional contributions to EM 5x5 resolution at η=0, L=10^33
1.0
0.9
0.8
0.7
0.6
0.5
0.4
0.3
0.2
0.1
0.0
10^-1
10^0
10^1
10^2
10^3
10^4
E (GeV)
6.0%/√E
0.4%
Quantization noise
Thermal noise
Pileup noise

Table 5.6 Calibration Goals and Means

Calibration Means	Purpose	Type of Information (Quantity Defined)	Time of Calibration
Current injection into front end at the electrodes	Readout chain - gain calibration and monitoring	Absolute charge calibration; relative channel-to-channel gain, time and amplitude response	All tests and periodically during experiment runs
e's and π's Beam test at FNAL	Mapping of calorimeter response of EM and hadronic modules	Response profile (relative) for a set of modules including boundaries in φ for hadronic modules	Prototype testing in 1995
e's and π's Beam test at SSCL	Mapping of calorimeter response, mainly vs. θ over the barrel-endcap boundary	Response profile (relative) for the boundaries in θ	SSCL test beam operation in 1997
Z^0 mass and particles with measured momentum in tracker.	Establishing absolute energy reference points for the barrel and end caps	Charge vs. energy scale	Experiment start and during experimental runs.
α-cells in the cryostats	Liquid purity monitoring	Ionization yield, absolute charge vs. electric field for α's	Continuously during the experiment

CALIBRATION PRECISION

D.C. CALIBRATION CURRENT
4.5μA/GeV

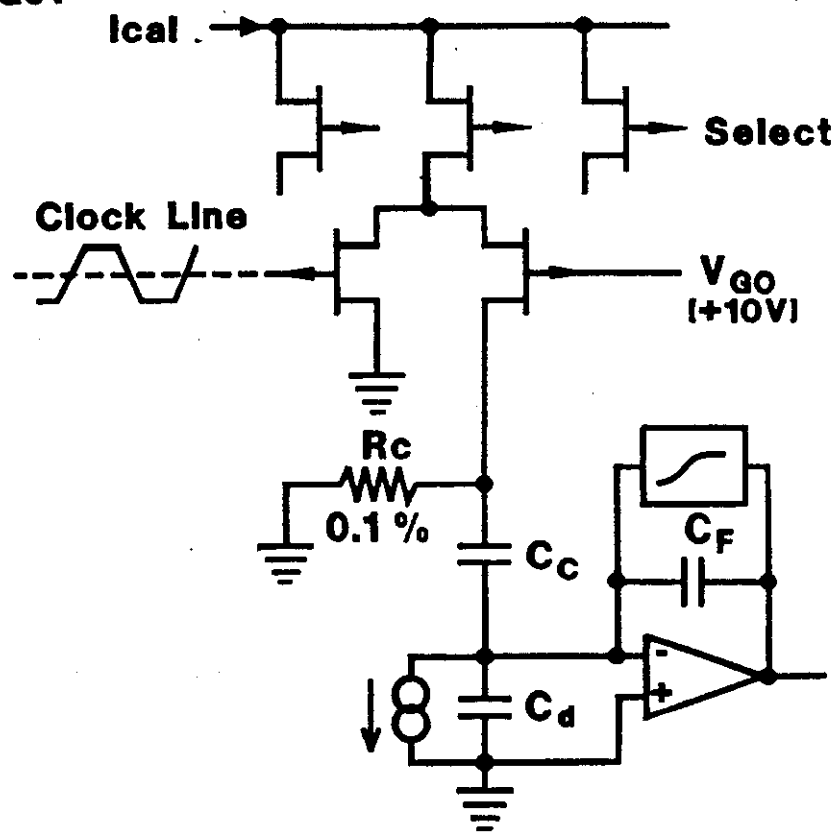

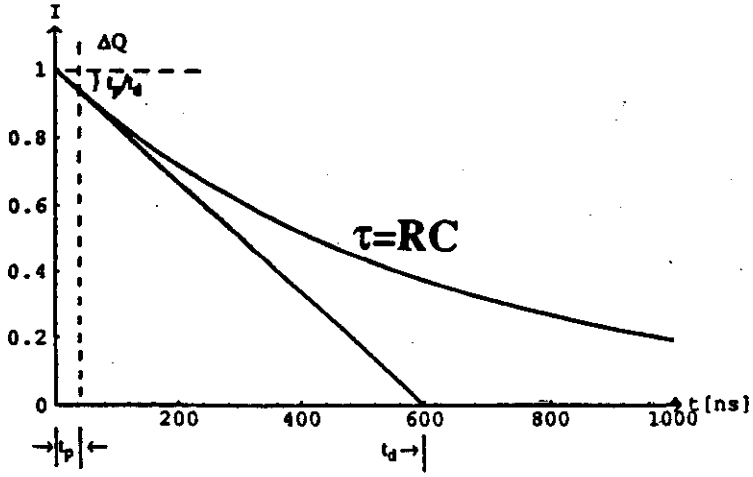

$$Q_{cal} = I_{cal} \cdot t_p \left(1 - \frac{1}{2}\frac{t_p}{t_d}\right)$$

$$\frac{\Delta Q}{Q_{cal}} = \frac{1}{2} \cdot \frac{t_p}{t_d} \approx \frac{1}{30} \quad for \;\; t_p = 40ns \;\; t_d = 600ns$$

$$\frac{\delta I_{cal}}{I_{cal}} \cong \frac{1}{30} \cdot \left(\frac{\delta R}{R}, \frac{\delta C}{C}\right)$$

switch parameters (V_T and noise)
do not influence calibration

Calibration Uniformity vs Ical

PJ32 FET, 25 nsec

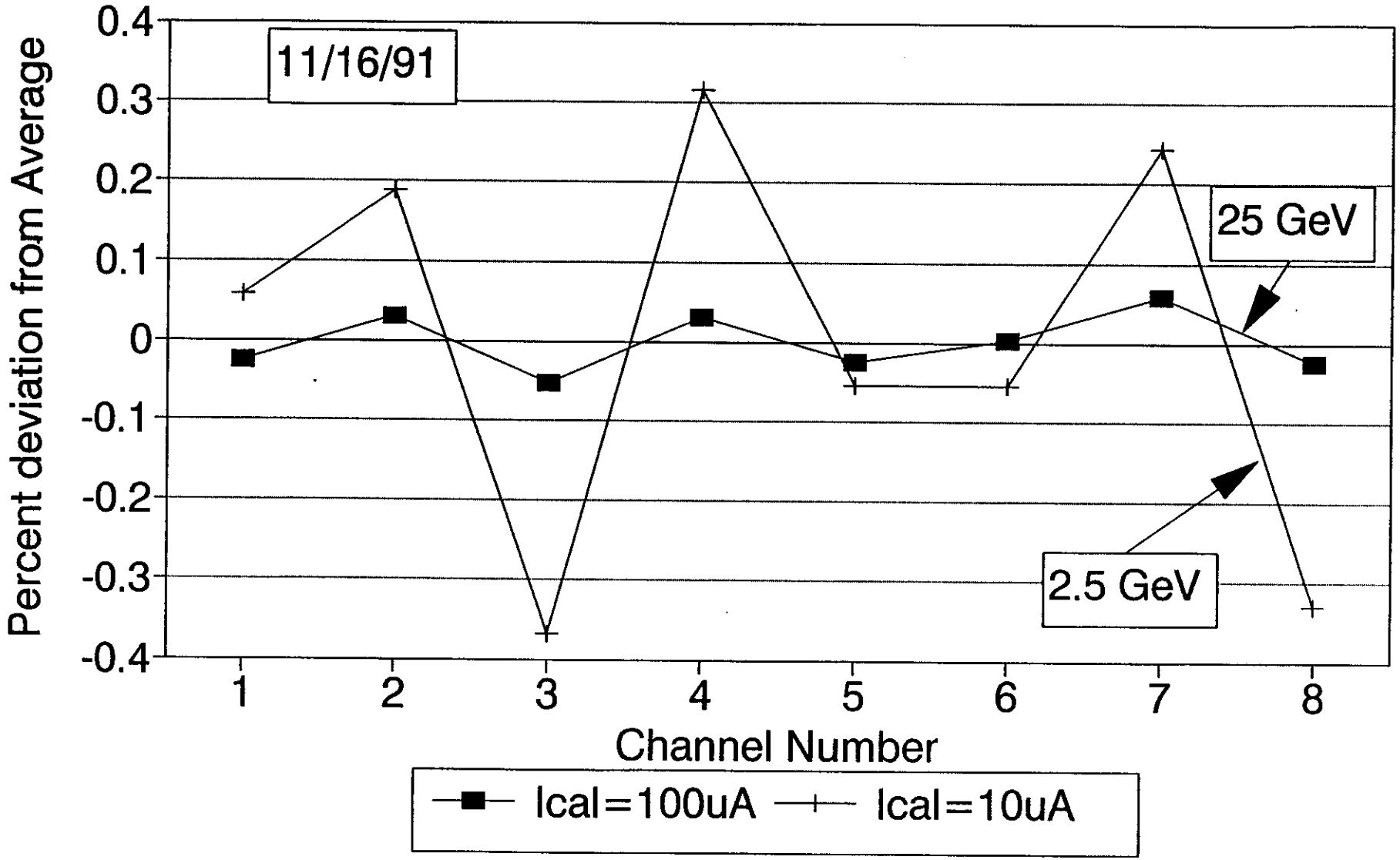

LKr	25 GeV	2.5 GeV
LAr	40 GeV	4 GeV

Calibration Linearity

P Channel FET, 25 nsec

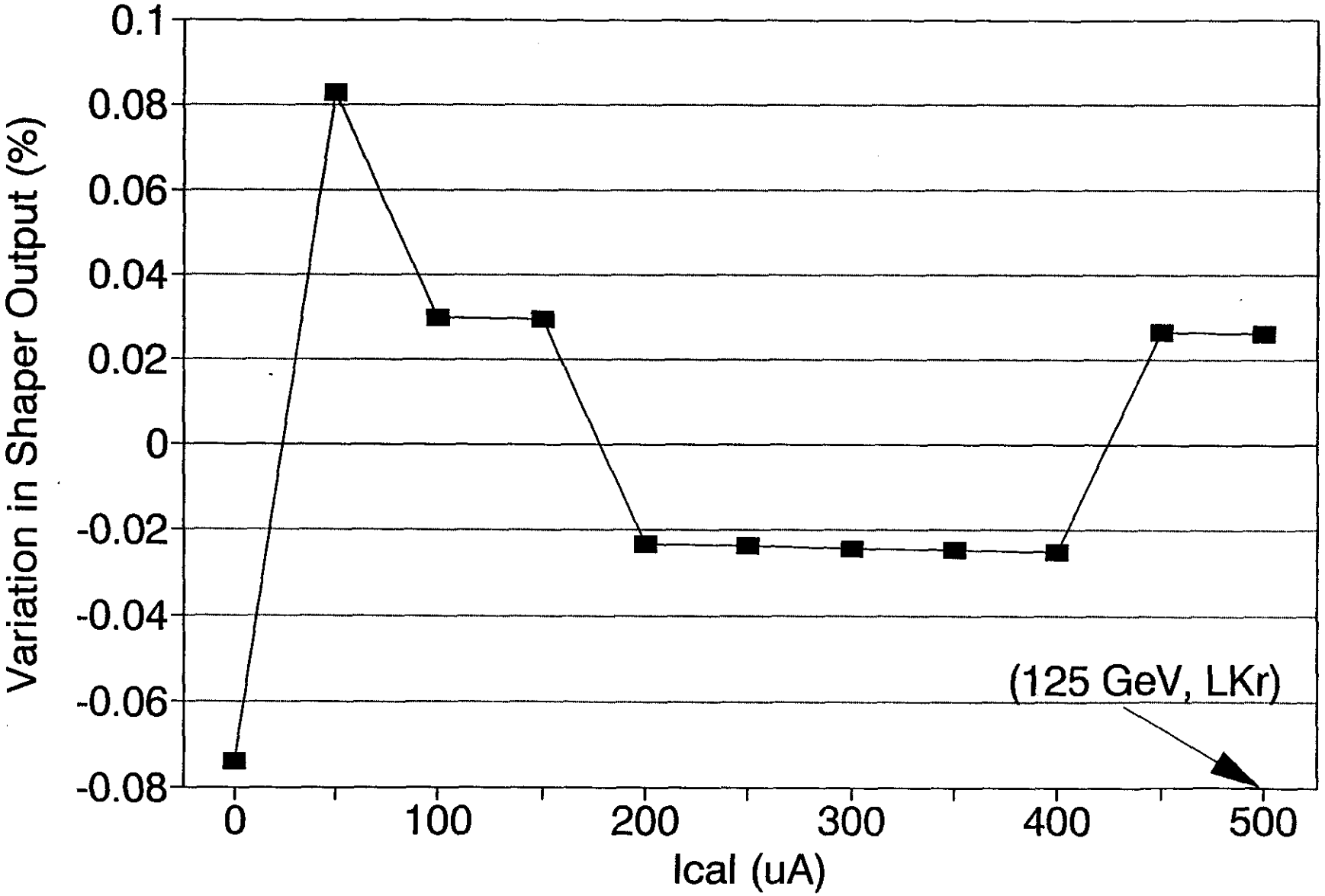

Simulated Calorimeter Pulses in LAr

(for different attachment coefficients)

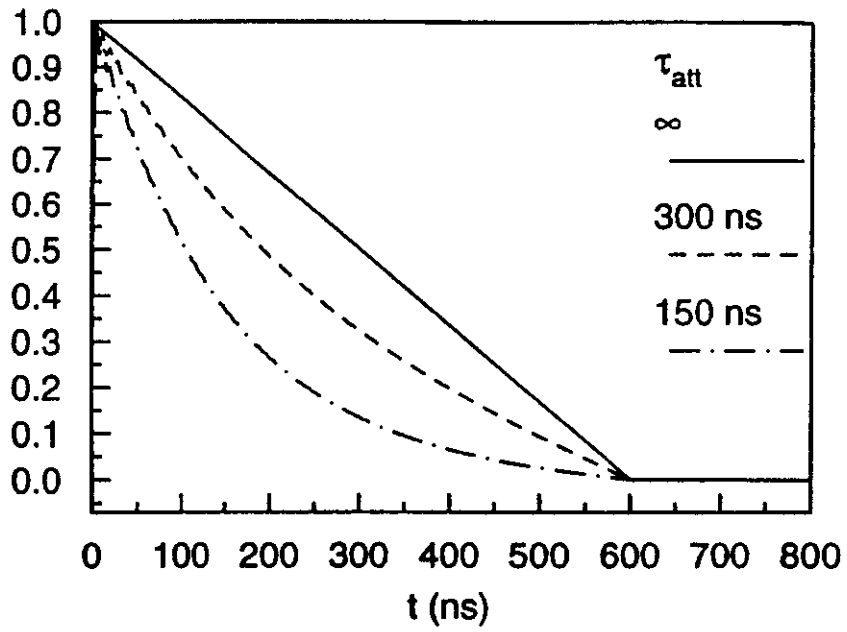

Current

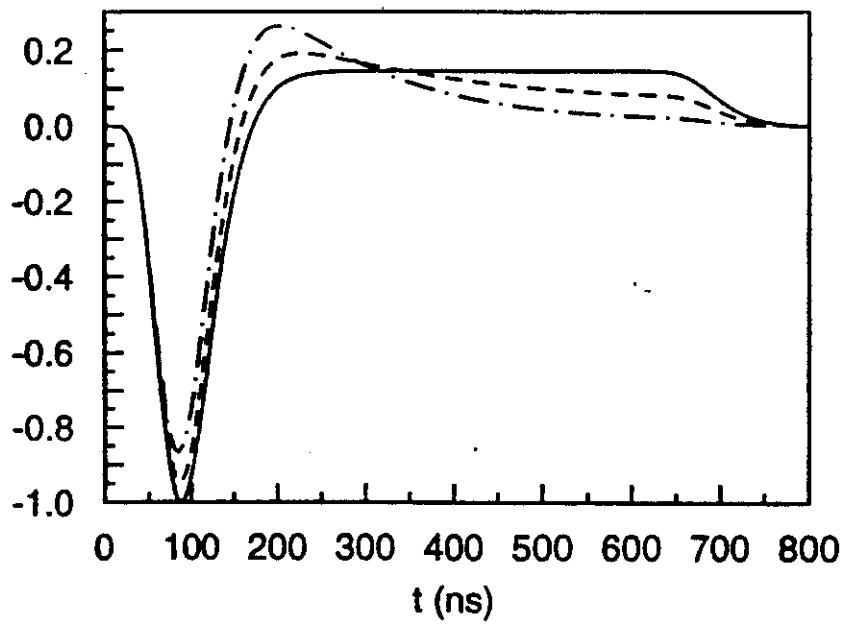

Shaped Signal

Thu May 20 12:17:58 EDT 1993; Out[74]

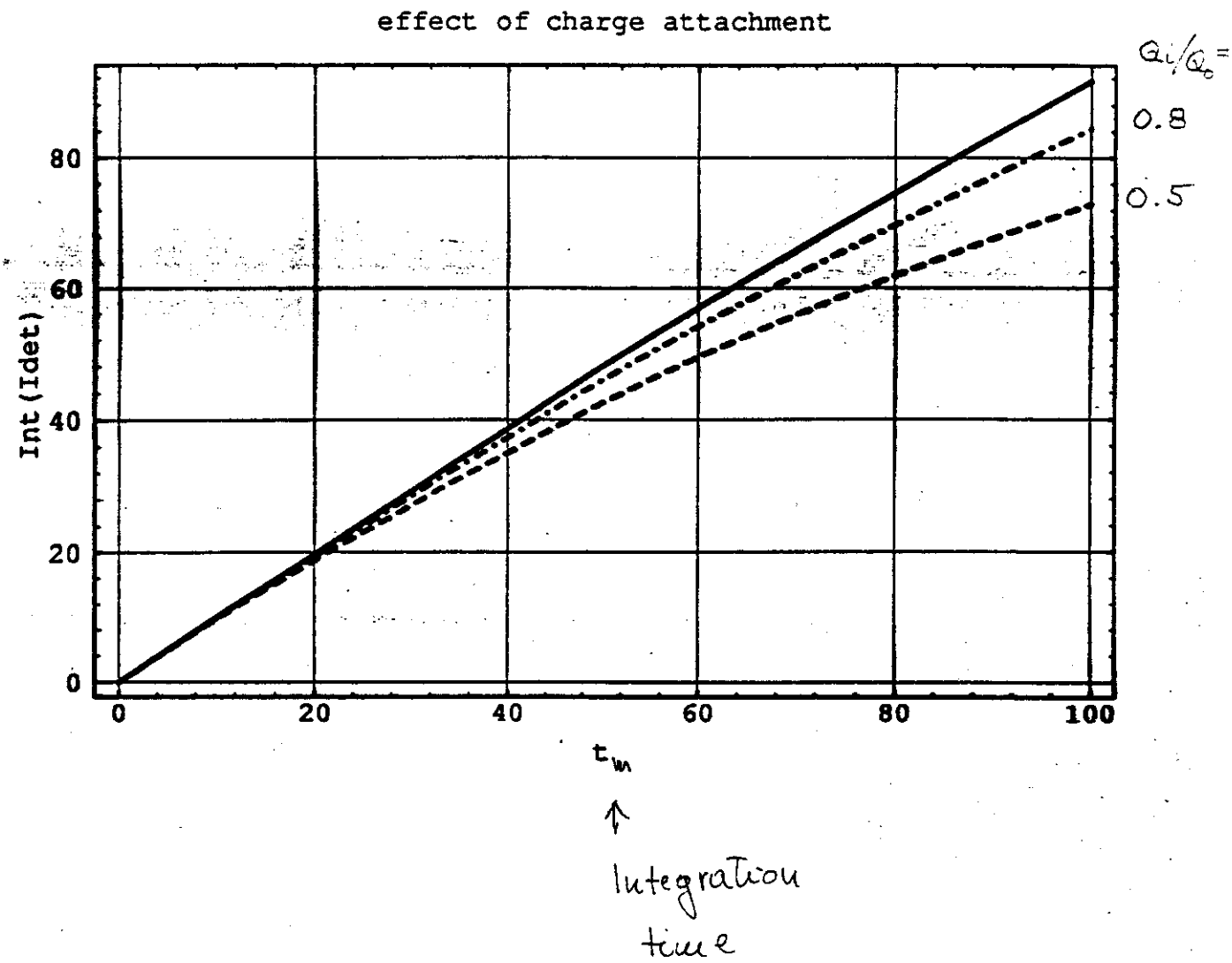

Accordion Structure

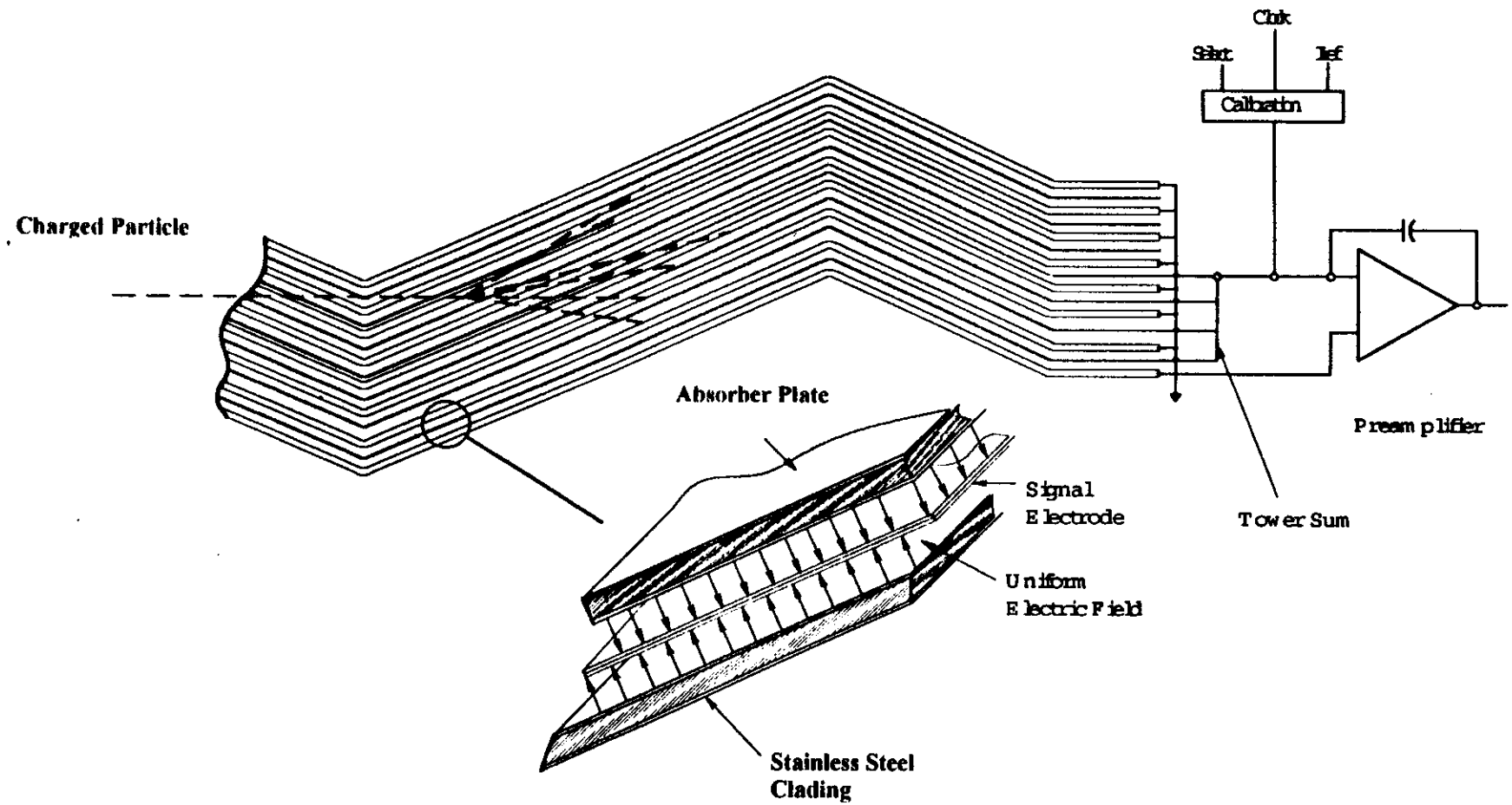

D SM

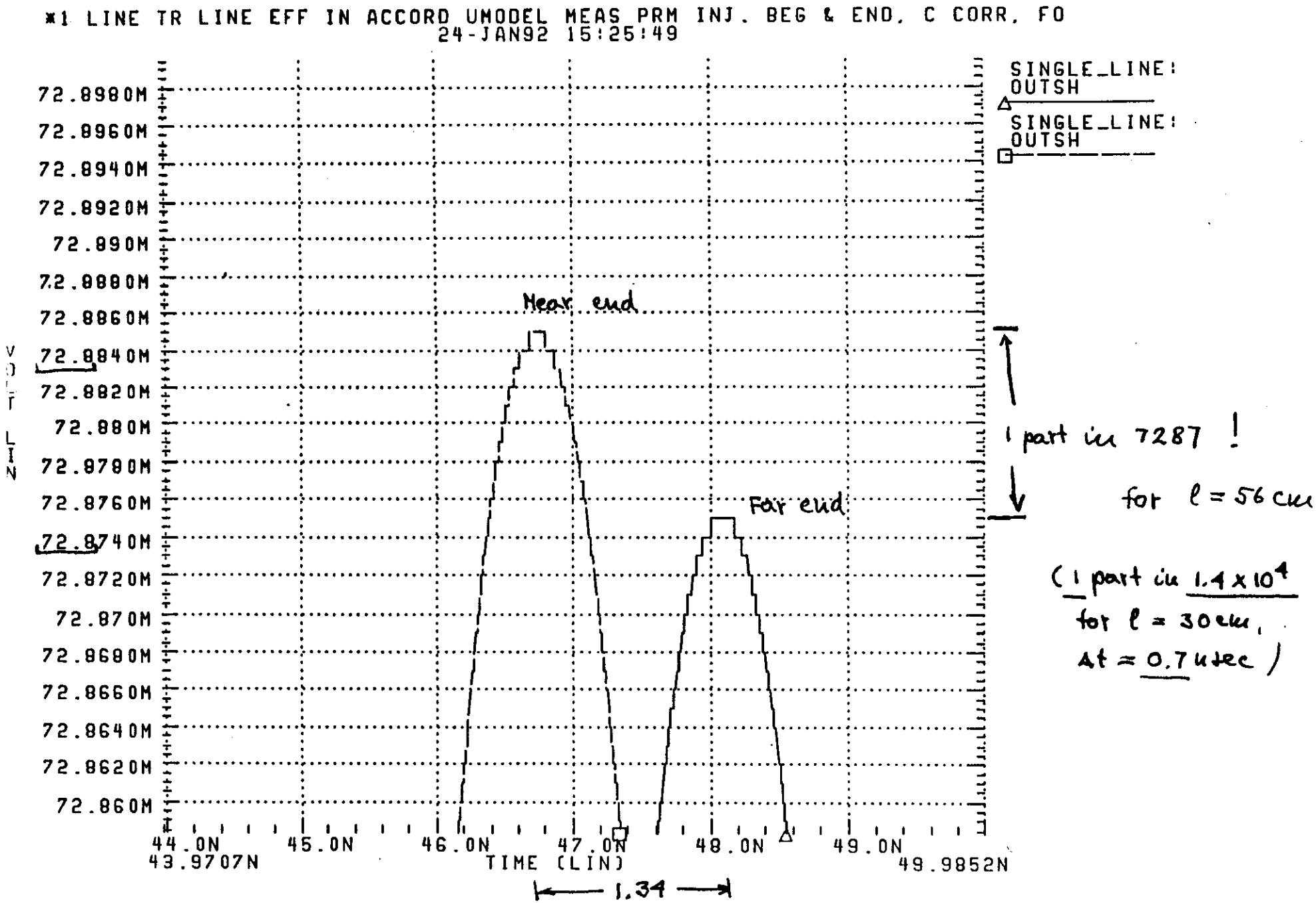
*1 LINE TR LINE EFF IN ACCORD UMODEL MEAS PRM INJ. BEG & END, C CORR, FO
24-JAN92 15:25:49
SINGLE_LINE: OUTSH
SINGLE_LINE: OUTSH
72.8980M
72.8960M
72.8940M
72.8920M
72.890M
72.8880M
72.8860M
72.8840M
72.8820M
72.880M
72.8780M
72.8760M
72.8740M
72.8720M
72.870M
72.8680M
72.8660M
72.8640M
72.8620M
72.860M
VOLT LIN
Near end
Far end
44.0N
45.0N
46.0N
47.0N
48.0N
49.0N
43.9707N
TIME (LIN)
49.9852N
1.34
1 part in 7287 !
for ℓ = 56 cm
(1 part in 1.4 x 10^4
for ℓ = 30 cm,
Δt = 0.7 μsec)

ENERGY RESOLUTION ($\sigma/\sqrt{E}$ [%])
.VS.
LEAD THICKNESS VARIATIONS IN ABSORBER
(Barrel)

Tolerance [μm]	energy [GeV]						
	25	40	80	120	160	240	320
0	5.6±0.2	5.6±0.2	5.6±0.17	5.4±0.15	5.9±0.18	5.7±0.17	5.7±0.16
25	5.6±0.23	5.4±0.19	5.6±0.2		5.2±0.15		5.5±0.36
50		5.5±0.15					
100		6.2±0.19					

Temperature and Presssure Effects on the Density of Liquid Ar and Kr

	Ar (89°)	(123°) Kr
$\frac{\Delta\rho}{\rho} / {}^{\circ}\mathbf{K}$	−0.458%/deg	−0.324%/deg
ΔT for 0.1% $\Delta\rho$	0.22°K	0.32°K
ρ	1.38	2.39
$\frac{\Delta\rho}{\rho} / \mathbf{bar}$	0.03%/bar	0.02%/bar

CONTRIBUTIONS TO THE CONSTANT TERM : Goal < 0.4%

	Local/Zonal	Magnitude or Time Scale	Corrective Action	
1. Absorber tolerancies	Z	50 μm crown – no effect	QA in production, 25 μm, sorting by mean value	<(0.28)%
2. Liquid gap tolerancies	Z	≥ 3× absorber tolerancies	design & production	
3. Q_s time dependence (impurities)	Z	very long time scale	purification, α-cell monitoring, MIP response 5-10× α	< 0.1%
4. Liquid density/temp.	Z	– " – ,	design and control	~ 0.1%
5. Readout stability	L		calibration	~0.1%
6. Local inhomogenities	L	small and understood		< 0.2%
– variation with φ	L			
– barrel, $e^{+/-}$ impact ∡				
– endcap, z-vertex				
7. Variations in the material in front of active region	L, Z		design	< 0.1%
8. HV variations	L, Z	$\frac{\Delta Q_s}{Q_s} / \frac{\Delta V}{V} \leq \frac{1}{5}$ (at 40 nsec)	design, control to < 10 V at 2 kV	< 0.1%

LIQUID CALORIMETER R&D

1. Previous experiments with participation by GEM collaboration members:

- Helios: Fast Calorimeter, $t_p \approx 100$ nsec

  Cold Preamps

  Analog Trigger Sums

  Hybrid Calorimeter:

  Longitudinal segmentation in LAr followed by a scint. cal. Multilayer electrodes for HV decoupling, with film resistors.

- D0: Construction of a Large Hermetic Liquid Calorimeter. Stable, long term operation.

- SLD: Large Hermetic Liquid Calorimeter
  Cold Feedthroughs, Tiles in Hadronic Modules

- H_1: A Large, Successful Calorimeter; Hadron Response Weighting Scheme Developed and Tested.

2. R&D:

1990 RD3: Development and demonstration of the EM accordion concept.

1991 RD3: Accordion operated with $t_p \approx 20$ nsec.

1992 RD3: Large scale projective accordion module:

0.62% at 287 GeV. Hadron modules with EST.

Good agreement with simulations.

GEM/BNL Liquid Krypton/Argon Test

$6.7\%/\sqrt{E}$; good agreement with simulations.

$\sigma_t \simeq 5$ GeV . nsec/E

3. R&D Plan:

1993:
- **Forward EM Tests at BNL AGS and CERN SPS**
- **RD3: Continue Participation in Endcap Studies**

1994:
- **Test of GEM endcap concept and strips within RD3 at CERN**

1995:
- **Major test at Fermilab:**
  - **2 full EM modules**
  - **7 barrel hadron modules**
  - **endcap hadron modules**

1997:
- **SSC Beam Test Program**

CONCURRENTLY WITH

- **Tests of all materials for radiation stability and liquid poisoning.**
- **Development of purification and certification methods for Liquid Krypton.**
- **Development of feedthroughs and cables. Testing and certification.**
- **Laminations of hadron tiles.**
- **EM electrodes production.**
- **Continuation of electronics R&D.**

GEM Calorimeter
Total Cost Summary
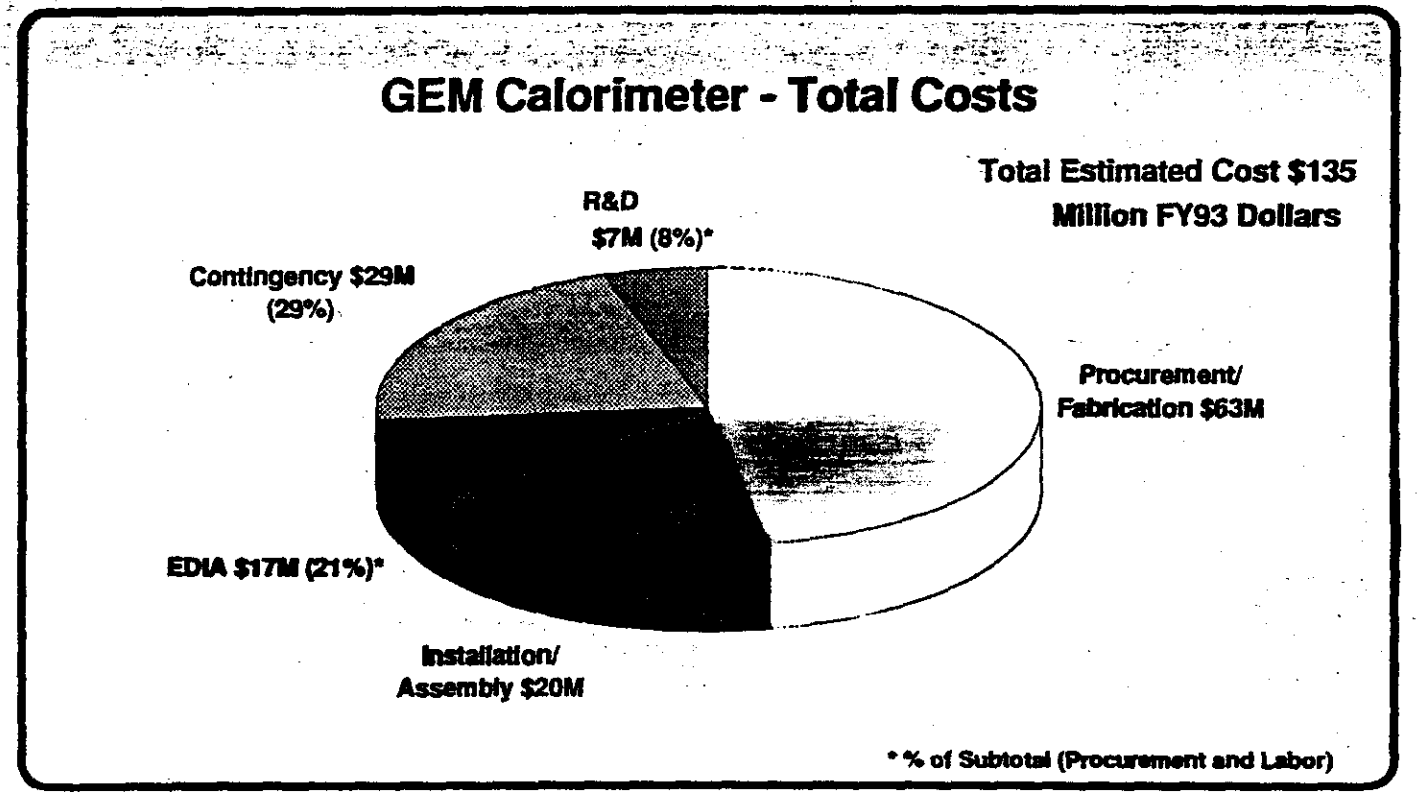
W.B.S. #	DESCRIPTION	LABOR ($k)	MATERIAL ($k)	SUBTOTAL ($k)	CONTING. ($k)	TOTAL ($k)
20.01	R&D	2,092	4,634	6,726	1,883	8,609
20.02	Inner Barrel	5,890	13,586	19,476	5,412	24,888
20.03	Scintil. Barrel	5,159	8,731	13,890	4,128	18,018
20.04	Endcap	11,961	15,447	27,408	7,642	35,050
20.05	Forward Hadronic	1,266	7,310	8,576	2,466	11,042
20.06	Passive Absorber	1,331	779	2,110	752	2,862
20.07	Vacuum	583	76	659	224	883
20.08	Cryogenics	499	11,954	12,453	2,565	15,018
20.09	Controls	52	215	267	73	340
20.10	Final Assy	511	509	1,020	429	1,449
20.11	Hall Installation	2,092	1,532	3,624	1,383	5,007
20.12	Test Beam	701	3,618	4,319	1,143	5,462
20.13	Subsys Mgmt	3,975	62	4,037	565	4,602
20.14	Concept./Prelim	1,864	117	1,981	205	2,186
	Total	37,976	68,570	106,546	28,870	135,416