SSCL-N-869
SSC Cryo Note No. 93-17

Procedure for SRS Performance Calculations

J. Demko and V. Ganni

Superconducting Super Collider Laboratory*
2550 Beckleymeade Ave.
Dallas, TX 75237

July 1994

*Operated by the Universities Research Association, Inc., for the U.S. Department of Energy under Contract No. DE-AC35-89ER40486.

SSC Cryo Note 93-17

PROCEDURE FOR
SRS
PERFORMANCE CALCULATIONS

J. Demko and V. Ganni

THE SUPERCONDUCTING SUPER COLLIDER LABORATORY

ASD/CRYOGENICS

May 1993

Introduction

Acceptance testing of the Sector Refrigerator Surface System (SRS) will be performed as described in section 3.9 of the SRS Technical Specification [1]. The SRS acceptance test block diagram is shown in Figure 1. It depicts the system capacity for the 4 K and 20 K loads, the equivalent input power to the system, and the locations and parameter measurements necessary to verify the performance of the SRS.

The 4 K and 20 K acceptance test refrigeration loads and the liquefaction loads required by the design mode acceptance test and the various stream inlet and outlet conditions are provided in Table 1. The heat leaks to any part of the system (e.g., coldbox, surface distribution box, dewars, transfer lines) are not part of the required capacity and cannot be included in determining the capacity or overall efficiency of the system as specified [1].

The 4 K and 20 K acceptance test loads are applied and measured by the electrical heat input in the surface distribution box. The refrigeration loads shown in Table 1 will be applied to heaters in the 4 K precooler and to the 20 K loop. The liquefaction rate will be measured by observing the room temperature makeup gas flow and will be verified by the rate of accumulation of liquid in the dewar. These two values should differ only by the displaced vapor mass flow from the dewar. The SRS acceptance tests require a demonstrated minimum design capacity and overall efficiency as defined in [1]. The procedure for determining the system overall efficiency and capacity from measurements is discussed below.

Uncertainty Calculation Theory

The calculated uncertainties for the measurement of a sector refrigeration station (SRS) Carnot power and overall efficiency can be determined from the measured quantities shown in Figure 1. The uncertainty calculations were made using the equation (1) from Holman [2], which is the same as the precision index of a result as defined in Section 3 of ANSI/ASME PTC19.1 [3]. In this equation V represents the dependent variable, δV the uncertainty of V, the x_i's are the independent variables and the δx_i's are the uncertainties in the measurements of the independent variables. It has been assumed that the bias in the measurements is negligible. The dependent variables of interest are the system deliverable Carnot capacity and the overall efficiency given by equations (2) and (3).

$$\delta V = \sqrt{\sum_{i=1}^{n} \left(\frac{\partial V}{\partial x_i}\delta x_i\right)^2} \tag{1}$$

$$P_o = P_{4K} + P_{liq} + P_{reliq} + P_{20K} \tag{2}$$

$$\eta = \frac{P_o}{P_{act}} \tag{3}$$

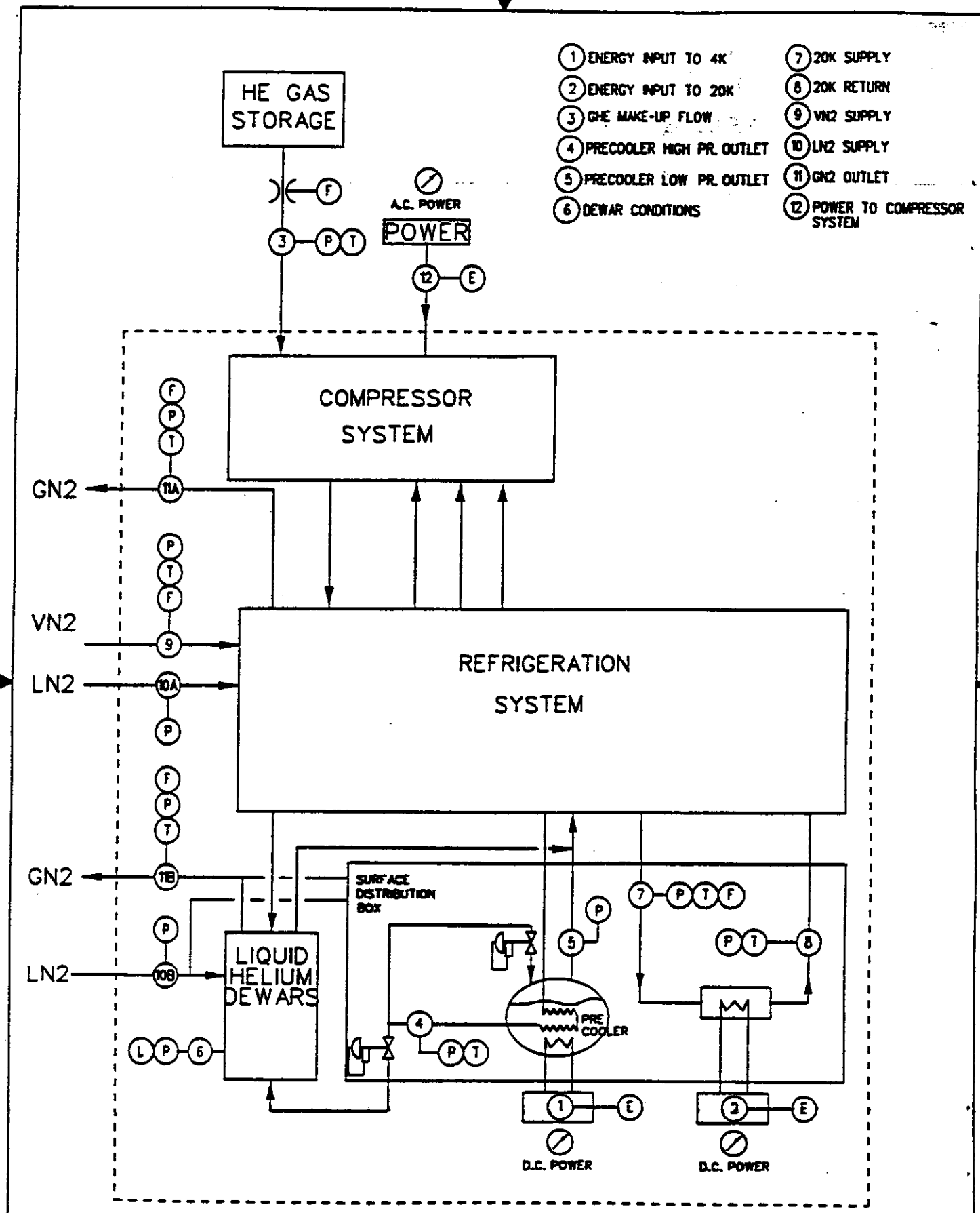

SSC

SRS ACCEPTANCE TEST BLOCK DIAGRAM
FIGURE: 1

25-FEB-1993 09:51

The quantity P_{act} is the measured equivalent power input to the sector refrigeration station unit and P_o is the Carnot power of the 4 K refrigeration, 4 K liquefaction, 4 K reliquefaction, and 20 K refrigeration. The equivalent input power includes the power required by the compressors P_E and for the nitrogen precooling and shield cooling P_P, as given in the first term in equation (4) with η_{80}=0.35. The precooling power is determined from measurements of the nitrogen streams at locations 9, 10, and 11 in Figure 1. The index j has two values, referring to the vapor and liquid nitrogen supplied. The second term of equation (4) is the additional compressor and auxiliary power input for each of N compressors with isothermal efficiency η_k, compressor motor efficiency μ_k, and parasitic power supplied to auxiliary devices p_k. This quantity is measured at location 12 in Figure 1 and verified by the measurements at individual modules.

$$P_{act} = P_P + P_E = \sum_{j=1}^{2} \frac{Q_{80j}}{\eta_{80} COP_{80j}} + \sum_{k=1}^{N} \left(\frac{P_k}{\mu_k \eta_k} + p_k \right) \tag{4}$$

As an example for the calculations contained in this report, the precooling power P_P was calculated assuming the maximum allowable flows (80 g/s for the LN_2 and 300 g/s for the 85 K VN_2 streams), and outlet temperatures at the sink temperature of 305 K. During the execution of the required performance testing, the cooling water inlet (sink) temperature T_o and the nitrogen streams' flow rates and outlet temperatures will most likely be different from the values assumed here. The actual power P_{act} is the sum of the precooling power and the measured input power. The measured input power is verified by measurements at the individual modules and reduction to the unit level performance.

The Carnot power is given in equation (5) for a refrigeration stream and equation (6) for a liquefaction stream. For the nitrogen streams, the heat transfer terms Q_{80j} are given by equation (7). Substituting this into the first term of equation (4) results in a form for the precooling streams' powers similar to (6).

$$P_{ref} = \frac{Q_{ref}}{\left(\dfrac{h_{out} - h_{in}}{T_0 (s_{out} - s_{in}) - (h_{out} - h_{in})} \right)} = \frac{Q_{ref}}{COP_{ref}} \tag{5}$$

$$P_{liq} = m_{liq} (T_0 (s_{out} - s_{in}) - (h_{out} - h_{in})) \tag{6}$$

$$Q_{80j} = m_j (h_{out} - h_{in})_j \tag{7}$$

The uncertainties in the Carnot power δP_o, in the actual power δP_{act}, and in the overall

efficiency $\delta\eta$ are given in terms of the uncertainties of the Carnot power of the four streams, P_{act}, and the uncertainty of its measurement δP_{act} in equations (8), (9), and (10).

$$\delta P_o = \sqrt{\delta P_{4K}^2 + \delta P_{liq}^2 + \delta P_{reliq}^2 + \delta P_{20K}^2} \tag{8}$$

$$\delta P_{act} = \sqrt{\delta P_P^2 + \delta\left(\sum_{k=1}^{N}\left(\frac{P_k}{\mu_k \eta_k} + p_k\right)\right)^2} \tag{9}$$

$$\delta\eta = \sqrt{\left(\frac{\delta P_o}{P_{act}}\right)^2 + \left(\frac{P_o \delta P_{act}}{P_{act}^2}\right)^2} \tag{10}$$

Equation (1) can be applied to equations (5) and (6) to obtain the uncertainties in the Carnot power with respect to the independent variables that pertain to each type of stream. For the liquefaction stream, the independent measured variables are the pressures at both the inlet and outlet, the temperature of the single phase inlet stream, and the measured mass flow of helium supplied. There are therefore four derivative terms to be evaluated as shown in equation (11).

$$\delta P_{liq} = \sqrt{\left(\frac{\partial P_{liq}}{\partial \dot{m}}\delta m\right)^2 + \left(\frac{\partial P_{liq}}{\partial t_{in}}\delta t_{in}\right)^2 + \left(\frac{\partial P_{liq}}{\partial p_{in}}\delta p_{in}\right)^2 + \left(\frac{\partial P_{liq}}{\partial p_{out}}\delta p_{out}\right)^2} \tag{11}$$

For the refrigeration streams, the measured independent variables are the inlet and outlet temperatures and pressures, and the heater power. The refrigeration streams have five derivative terms as shown in equation (12).

$$\delta P_{ref} = \sqrt{\left(\frac{\partial P_{ref}}{\partial Q_{ref}}\delta Q_{ref}\right)^2 + \left(\frac{\partial P_{ref}}{\partial t_{in}}\delta t_{in}\right)^2 + \left(\frac{\partial P_{ref}}{\partial p_{in}}\delta p_{in}\right)^2 + \left(\frac{\partial P_{ref}}{\partial t_{out}}\delta t_{out}\right)^2 + \left(\frac{\partial P_{ref}}{\partial p_{out}}\delta p_{out}\right)^2} \tag{12}$$

The required derivatives in equations (11) and (12) may be determined analytically from the functional relationships for the power given in equations (5) and (6). The required derivatives for a refrigerator are given in (13) - (17).

$$\frac{\partial P_{ref}}{\partial Q_{ref}} = \frac{1}{COP_{ref}} \tag{13}$$

$$\frac{\partial P_{ref}}{\partial t_{in}} = Q_{ref} T_0 \left(\frac{(s_{out} - s_{in})}{(h_{out} - h_{in})^2} \frac{\partial h_{in}}{\partial t_{in}} - \frac{1}{(h_{out} - h_{in})} \frac{\partial s_{in}}{\partial t_{in}} \right) \tag{14}$$

$$\frac{\partial P_{ref}}{\partial p_{in}} = Q_{ref} T_0 \left(\frac{(s_{out} - s_{in})}{(h_{out} - h_{in})^2} \frac{\partial h_{in}}{\partial p_{in}} - \frac{1}{(h_{out} - h_{in})} \frac{\partial s_{in}}{\partial p_{in}} \right) \tag{15}$$

$$\frac{\partial P_{ref}}{\partial t_{out}} = Q_{ref} T_0 \left(\frac{1}{(h_{out} - h_{in})} \frac{\partial s_{out}}{\partial t_{out}} - \frac{(s_{out} - s_{in})}{(h_{out} - h_{in})^2} \frac{\partial h_{out}}{\partial t_{out}} \right) \tag{16}$$

$$\frac{\partial P_{ref}}{\partial p_{out}} = Q_{ref} T_0 \left(\frac{1}{(h_{out} - h_{in})} \frac{\partial s_{out}}{\partial p_{out}} - \frac{(s_{out} - s_{in})}{(h_{out} - h_{in})^2} \frac{\partial h_{out}}{\partial p_{out}} \right) \tag{17}$$

The appropriate derivatives for a liquefier are given by equations (18) - (21). The nitrogen streams contain one additional derivative term given by (22). The property derivatives contained in these expressions were evaluated approximately by finite differences.

$$\frac{\partial P_{liq}}{\partial m_{liq}} = T_0 (s_{out} - s_{in}) - (h_{out} - h_{in}) \tag{18}$$

$$\frac{\partial P_{liq}}{\partial p_{in}} = m_{liq} \left(-T_0 \frac{\partial s_{in}}{\partial p_{in}} + \frac{\partial h_{in}}{\partial p_{in}} \right) \tag{19}$$

$$\frac{\partial P_{liq}}{\partial t_{in}} = m_{liq} \left(-T_0 \frac{\partial s_{in}}{\partial T_{in}} + \frac{\partial h_{in}}{\partial t_{in}} \right) \tag{20}$$

$$\frac{\partial P_{liq}}{\partial p_{out}} = m_{liq} \left(T_0 \frac{\partial s_{out}}{\partial p_{out}} - \frac{\partial h_{out}}{\partial p_{out}} \right) \tag{21}$$

$$\frac{\partial P_{liq}}{\partial t_{out}} = m_{liq} \left(T_0 \frac{\partial s_{out}}{\partial t_{out}} - \frac{\partial h_{out}}{\partial t_{out}} \right) \tag{22}$$

Test Considerations

All of the test runs begin when steady state is reached. So after an operating mode change in the helium refrigerator/liquefier the system should be allowed to run for a sufficient time to allow

the system to reach equilibrium before beginning a performance test.

The design mode test run is to be used to determine the overall efficiency incentive. The test duration is 48 hours, so a performance data point should be determined for every half hour providing 96 sets of performance data points. For the nominal mode, the test duration is only 24 hours so performance data should be determined every 15 minutes to provide the same number of performance data sets. The actual measured data quantities (i. e., pressures, temperatures, flow, and power) used to determine the overall efficiency and capacities will be read at a higher rate of one set of data every 1-5 minutes. The measurements will then be averaged and the average used to determine the overall efficiency and capacities for that 30 minute (or 15 minute) interval. The values of overall efficiency and capacities determined for all of the 30 minute (or 15 minute) intervals will be used to determine the mean overall efficiency and mean capacities for the SRS.

The uncertainty of these measurements has been discussed previously in this Cryo Note in order to provide a measure of the accuracy of a particular measurement. Associated with the set of measurements will be some distribution similar to that shown in Figure 2 assuming that the errors are random. Some of the scatter in the data will be due to changes in ambient conditions which may effect the system operation and calculation of the overall efficiency. The 95% confidence level means that there is a 95% chance that the true value is contained between $V_{mean} \pm 2\sigma$. If a normal distribution is followed, as shown in the figure, the mean value will also be the most frequently occurring, and ought to be used for determining compliance with the Specification and for determining the incentives.

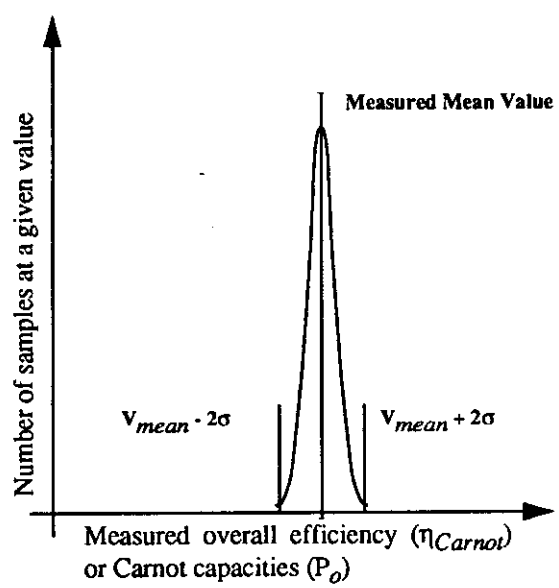

Figure 2: Distribution of measured parameters showing 95% confidence level limits of $V_{mean} \pm 2\sigma$

The treatment of outliers should be handled as described in ANSI/ASME PTC 19.1- 1985 or later. It should be applied first to the measured data used to determine the overall efficiency and capacities for a particular time, and second in the determination of the mean overall efficiency and

capacities. The standard recommends the use of the Thompson τ Technique (Modified). In this technique the deviation of each suspected measurement from the average value ($d_i = x_i - x_{avg}$) is compared with τ times the standard deviation σ. If the deviation is greater than this quantity (i.e., $d_i > \tau\sigma$), then the point is considered spurious and is deleted from the data set; the average and standard deviation are then recomputed. The standard recommends reapplying the technique until there are no outliers remaining. The value of τ depends on the sample size. A table contained in the standard [3] provides a value of $\tau = 1.924$ for a sample size of 40. For the 96 data points to be taken in these performance tests, τ may be assumed to be 1.970 based on a linear extrapolation of values from the table in [3].

The mean values obtained after completing this process will be compared to the guarantees proposed by the vendors (they shall be greater than the minimum required in [1]) to determine the efficiency and capacity credits.

Results and Discussion

The accuracy of the measurements must be known in order to calculate the uncertainties given by these equations. For one set of the calculations the accuracies were taken from the SRS technical specification [1]. Two additional cases were calculated where a lower and higher accuracy of certain measured inputs was assumed. The accuracy values used in this analysis are summarized in Table 2.

Table 3 contains the calculated uncertainties of the Carnot power required by the 4 K and 20 K refrigeration streams and for the 4 K liquefaction and reliquefaction streams. The refrigeration, liquefaction, and reliquefaction streams are also broken down into the uncertainty due to the heat load or mass flow uncertainty and the uncertainty in the measurement of COP, which is determined from the pressure and temperature measurements. The overall efficiency and Carnot capacity uncertainty calculations were made for both the minimum and maximum design capacities.

The calculated uncertainty in the overall efficiency of the sector refrigeration station for three Carnot efficiencies and decreased accuracy (Case A), RFP accuracy (Case B), and increased accuracy (Case C) are provided in Table 4 for the minimum design capacities and Table 5 for maximum capacity operation. These tables also contain the total Carnot power for the helium streams, the total precooler power P_p, the input power P_E, the total actual power P_{act}, and their respective uncertainties calculated from equations (3) and (4) using assumed overall efficiency values η_C. The overall efficiency uncertainties were determined using equation (10). The uncertainty in the overall efficiency is seen to increase with increasing SRS overall efficiency. The uncertainty decreases substantially when assuming increased accuracy in the heater power and input power measurement. For the low accuracy case the uncertainty of the measured overall efficiency is on the order of 1%, which is too high. The measurement accuracies specified in the Technical Specification should be adhered to.

Table 1: Sector Refrigerator Surface System Design Mode Acceptance Test Loads

	p_{in}	t_{in}	h_{in}	s_{in}	p_{out}	t_{out}	h_{out}	s_{out}	FLOW	1/COP	LOAD	P_{Car}
	bar	K	J/G	J/G-K	bar	K	J/G	J/G-K	g/s		W	kW
REFR	4.00	4.45	11.89	3.475	1.19	4.40	30.62	8.218		76.22	9400	716
LIQUEF.	4.00	4.45	11.89	3.475	1.05	305	1599	31.59	45	4.40		314
RELIQUEF.	1.19	4.40	11.03	3.774	1.19	4.40	30.62	8.218	9	68.17	175	12
20 K SYS.	4.00	14.0	83.91	12.60	2.00	27.7	158.9	17.78	200	20.10	15000	302
TOTAL SYSTEM CAPACITY REQUIRED (P_o)												1344

Table 2: Accuracies used to determine uncertainty in overall efficiency and Carnot capacities

Measurement	Case A (Decreased Accuracy)	Case B (RFP Accuracy)	Case C (Increased Accuracy)
Pressure[a,b]	+/- 2.0%	+/- 0.5%	
Temperature	Range 2 - 6 K Accuracy +/- 150 mk Range 6 - 40 K Accuracy+/- 300 mK Range 40 - 100 K Accuracy +/- 550 mK Range 100 - 300 K Accuracy +/- 1100 mK Range 300 - 400 K Accuracy +/- 1.1%		
Mass Flow	+/- 2.0%	+/- 1.0%	
Heater Power[a,b]	+/- 2.0%	+/- 1.0%	+/- 0.5%
Input Power[a,b]	+/- 2.0%	+/- 1.0%	+/- 0.5%

Note: a) Accuracies are specified in percent of full scale.
b) Full scale is assumed to mean 150% of the measured value for the following calculations.

Table 3: Uncertainty in measurement of Carnot refrigeration capacities

	Units	Minimum Design Capacity			Maximum Design Capacity		
		Decreased Accuracy	RFP Accuracy	Increased Accuracy	Decreased Accuracy	RFP Accuracy	Increased Accuracy
4K Refrigeration							
$Q_{4K\ Refr}$	Watts	9,400			10,340		
$1/COP_{4K,R}$		76.273			76.273		
$P_{4K,R}$	Watts	716,968			788,633		
δP_q	Watts	21,509	10,755	5,377	23,660	11,830	5,915
δP_{COP}	Watts	7,468	3,610	3,610	8,215	3,971	3,971
$\delta P_{4K,R}$	Watts	22,769	11,344	6,477	25,045	12,479	7,124
20 K Refrigeration							
$Q_{20\ K\ Refr}$	Watts	15,000			16,500		
$1/COP_{20K,R}$		20.101			19.966		
$P_{20K,R}$	Watts	301,514			329,444		
δP_q	Watts	9,045	4,523	2,261	9,883	4,942	2,471
δP_{COP}	Watts	6,123	3,467	3,467	6,639	3,747	3,747
$\delta P_{20K,R}$	Watts	10,923	5,699	4,139	11,906	6,201	4,488
4 K Liquefaction							
$Flow_{4K\ Liq}$	g/s	45.			49.5		
$1/COP_{4K,L}$		4.4024			4.4024		
$P_{4K,L}$	Watts	314,518			345,970		
δP_m	Watts	6,290	3,145		6,919	3,460	
δP_{COP}	Watts	2,098	1,928		2,308	2,121	
$\delta P_{4K,L}$	Watts	6,631	3,689		7,294	4,058	
4 K Reliquefaction							
$Flow_{4K\ Reliiq}$	g/s	9			9.8		
$1/COP_{4K,Reliq}$		68.217			68.217		
$P_{4K,Reliq}$	Watts	12,040			13,057		
δP_m	Watts	241	120		261	131	
δP_{COP}	Watts	171	43		186	47	
$\delta P_{4K,Reliq}$	Watts	296	127		320	139	

Table 4: Minimum design capacity powers and overall efficiency uncertainty

		Units	η=0.28	η=0.30	η=0.32
Case A (Decreased accuracy)	P_o	Watts	1,345,040		
	δP_o	Watts	26,111		
	$\delta P_o/P_o$	-	0.0194		
	P_p	Watts	326,229		
	δP_p	Watts	5,886		
	P_E	Watts	4,477,482	4,157,235	3,877,019
	δP_E	Watts	134,324	124,717	116,311
	P_{act}	Watts	4,803,711	4,483,464	4,203,247
	δP_{act}	Watts	134,453	124,856	116,459
	$\delta\eta$	-	0.0095	0.0102	0.0108
Case B (RFP accuracy)	P_o	Watts	1,345,040		
	δP_o	Watts	13,220		
	$\delta P_o/P_o$	-	0.0098		
	P_p	Watts	326,229		
	δP_p	Watts	2,806		
	P_E	Watts	4,477,482	4,157,235	3,877,019
	δP_E	Watts	67,162	62,358	58,155
	P_{act}	Watts	4,803,711	4,483,464	4,203,247
	δP_{act}	Watts	67,221	62,422	58,223
	$\delta\eta$	-	0.0048	0.0051	0.0054
Case C (Increased accuracy)	P_o	Watts	1,345,040		
	δP_o	Watts	8,527		
	$\delta P_o/P_o$	-	0.0063		
	P_p	Watts	326,229		
	δP_p	Watts	2,806		
	P_E	Watts	4,477,482	4,157,235	3,877,019
	δP_E	Watts	33,581	31,305	29,213
	P_{act}	Watts	4,803,711	4,483,464	4,203,247
	δP_{act}	Watts	33,698	31,305	29,213
	$\delta\eta$	-	0.0026	0.0028	0.0030

Table 5: Maximum design capacity powers and overall efficiency uncertainty

		Units	η=0.28	η=0.30	η=0.32
Case A Decreased accuracy	P_o	Watts	1,477,129		
	δP_o	Watts	28,676		
	$\delta P_o/P_o$	-	0.0194		
	P_p	Watts	326,229		
	δP_p	Watts	5,886		
	P_E	Watts	4,949,231	4,597,534	4,289,799
	δP_E	Watts	148,477	137,926	128,694
	P_{act}	Watts	5,275,460	4,923,763	4,616,028
	δP_{act}	Watts	148,593	138,051	128,828
	$\delta\eta$	-	0.0096	0.0102	0.0109
Case B RFP accuracy	P_o	Watts	1,477,129		
	δP_o	Watts	14,514		
	$\delta P_o/P_o$	-	0.0098		
	P_p	Watts	326,229		
	δP_p	Watts	2,806		
	P_E	Watts	4,949,231	4,597,534	4,289,799
	δP_E	Watts	74,238	68,963	64,347
	P_{act}	Watts	5,275,460	4,923,763	4,616,028
	δP_{act}	Watts	74,291	69,020	64,408
	$\delta\eta$	-	0.0048	0.0051	0.0055
Case C Increased accuracy	P_o	Watts	1,477,129		
	δP_o	Watts	9,348		
	$\delta P_o/P_o$	-	0.0063		
	P_p	Watts	326,229		
	δP_p	Watts	2,806		
	P_E	Watts	4,949,231	4,597,534	4,289,799
	δP_E	Watts	37,119	34,482	32,173
	P_{act}	Watts	5,275,460	4,923,763	4,616,028
	δP_{act}	Watts	37,225	34,595	32,296
	$\delta\eta$	-	0.0027	0.0028	0.0030

NOMENCLATURE

COP - Coefficient of performance
h_{in} - Inlet stream enthalpy (J/g)
h_{out} - Outlet stream enthalpy (J/g)
m_{liq} - Liquefaction stream mass flowrate (g/s)
p_{in} - Inlet stream pressure (Pa)
p_{out} - Outlet stream pressure (Pa)
p_k - Parasitic power supplied to auxiliary devices (e.g., oil pumps and bearing gas compressors)
P_k - Isothermal compressor power of kth compressor (W)
P_{act} - Measured equivalent power (W)
P_{Car} - Carnot power (W)
P_E - Measured electrical power to compressors (W)
P_{liq} - Liquefaction stream Carnot power (W)
P_P - Nitrogen precooling and shield power (W)
P_{ref} - Refrigeration stream Carnot power (W)
P_{reliq} - Reliquefaction stream Carnot power (W)
P_{4K} - 4 K Carnot refrigeration power (W)
P_{20K} - 20 K Carnot refrigeration power (W)
P_o - Total Carnot power (W)
Q_{ref} - General refrigeration heat load to the 4K, 20K or from reliquefaction (W)
Q_{4K} - 4 K heat load (W)
Q_{20K} - 20 K heat load (W)
Q_{80j} - Nitrogen precooling power for the vapor or liquid nitrogen supplied (W)
s_{in} - Inlet stream entropy (J/g-K)
s_{out} - Outlet stream entropy (J/g-K)
T_0 - Sink temperature taken as 305 K
t_{in} - Inlet stream temperature (K)
t_{out} - Outlet stream temperature (K)
V - General dependent variable
x - General measured independent variable
η - Overall efficiency given by equation (3)
η_{80} - Assumed efficiency of a nitrogen refrigerator supplying VN_2 and LN_2 equal to 0.35
η_k - Isothermal efficiency of compressor k
μ_k - Efficiency of the kth compressor motor

REFERENCES

[1] Technical Specification for the Sector Refrigerator Surface System (SRS) for the Collider Main Ring and High Energy Booster Superconducting Super Collider Laboratory (SSCL), Number AHA-6110002, October 1992.

[2] J. P. Holman, "Experimental Methods for Engineers," McGraw-Hill, 1978.

[3] ANSI/ASME PTC 19.1-1985, "Measurement Uncertainty."