SSCL-N-866

Global Accelerator Control System Requirements Specification Level 3B

D. Gurd

Superconducting Super Collider Laboratory*
2550 Beckleymeade Ave.
Dallas, TX 75237 USA

June 1994

*Operated by the Universities Research Association, Inc., for the U.S. Department of Energy under Contract No. DE-AC35-89ER40486.

TABLE OF CONTENTS

1.0 Introduction 1

1.1 Purpose 1

1.2 Scope 1

1.3 APPLICABLE DOCUMENTS 1
1.3.1 SSCL DOCUMENTS 1
1.3.2 Non-SSCL DOCUMENTS 1

1.4 Definitions, Acronyms, and Abbreviations 1

2.0 GENERAL DESCRIPTION 2

2.1 Project Overview 2

2.2 Primary Functions 2
2.2.1 GACS Software Infrastructure 2
2.2.2 Communications 3
2.2.3 Timing 3
2.2.4 GACS Model 3

2.3 User Characteristics 3
2.3.1 Control System Development Interface groups 3
2.3.2 Operations Users and Modes 3

2.4 General Constraints 5
2.4.1 Open System 5
2.4.2 Standards 5
2.4.2.1 VME/VXI 5
2.4.2.2 POSIX 5
2.4.3 Equipment Locations 5
2.4.4 Beam Controls vs. Process Controls 5

3.0 REQUIREMENTS 7

3.1 Introduction 7

3.2 Level 6 - Information eXchange Services (IXS) 7
3.2.1 Introduction 7
3.2.2 Processing and Support Hardware 7
3.2.3 Software Infrastructure 7
3.2.4 Communications 8
3.2.5 Timing 8
3.2.6 System Performance Requirements 8
3.2.6.1 Data Connections 8
3.2.6.2 Data Throughput 8

3.3 Level 5 - Machine Integration 9
3.3.1 Introduction 9

TABLE OF CONTENTS

3.3.2 Processing and Support Hardware 9
3.3.2.1 Operator Stations 9
3.3.2.2 Status Displays 10
3.3.2.3 Server Systems and Peripherals 10
3.3.3 Software Infrastructure 10
3.3.4 Communications 11
3.3.4.1 Networks 11
3.3.4.2 Global Message Broadcast System 12
3.3.5 Timing 13
3.3.5.1 Equipment Provisions 13
3.3.5.2 Performance 13
3.3.5.3 Interfaces 14

3.4 Level 4 - Machine Controls 15
3.4.1 Introduction 15
3.4.2 Processing and Support Hardware 15
3.4.2.1 Data Concentrators 15
3.4.2.2 Machine Sequencers 16
3.4.2.3 File Servers 16
3.4.3 Software Infrastructure 16
3.4.4 Communications 16
3.4.4.1 Sychronous Optical NETwork (SONET) 16
3.4.4.2 Add-Drop Multiplexors (ADM) 17
3.4.4.3 Machine Data Routers 17
3.4.4.4 MBS 17
3.4.5 Machine Timing 17
3.4.5.1 Performance 17

3.5 Level 3 - Sector Controls 19
3.5.1 Introduction 19
3.5.2 Processing and Support Hardware 19
3.5.2.1 BCS file servers 19
3.5.2.2 BCS Operator Station 20
3.5.3 Software Infrastructure 20
3.5.4 Communications 20
3.5.4.1 Networks 20
3.5.4.2 MBS 20
3.5.5 Timing 20
3.5.6 System Performance 20

3.6 Level 2 - Subsystem Controls 20
3.6.1 Introduction 20
3.6.2 Processing and Support Hardware 21
3.6.2.1 RMPS Supervisor 21
3.6.2.2 QPS Supervisor 21

TABLE OF CONTENTS

3.6.2.3 RF Group Controller 21
3.6.2.4 Vacuum Subsystem Controllers 21
3.6.2.5 Cryogenic Subsystem Controllers 21
3.6.3 Software Infrastructure 21
3.6.4 Communications 21
3.6.4.1 Networks 21
3.6.4.2 MBS 21
3.6.5 Timing 21
3.6.6 System Performance 21

3.7 Level 1 - Front End Controls 21
3.7.1 Introduction 21
3.7.2 Processing and Support Hardware 21
3.7.2.1 IOC Hardware 21
3.7.2.2 Crate 22
3.7.2.3 Processor 22
3.7.2.4 General I/O Modules 22
3.7.2.5 GACS Special I/O Modules 22
3.7.2.6 Field Bus Support 23
3.7.2.7 Front End Support Equipment 23
3.7.3 IOC Software 23
3.7.3.1 Infrastructure 23
3.7.3.2 Applications Software 23
3.7.4 Communications 23
3.7.5 Timing 23
3.7.6 IOC System Performance 23
3.7.6.1 Processing 23
3.7.6.2 Stand-alone operation 23
3.7.6.3 Local Operations 24

1.0 Introduction

1.1 Purpose

The purpose of this document is to specify the requirements for the Global Accelerator Control System (GACS) as it is applied to all SSCL machines.

1.2 Scope

From this specification, software and hardware designs for controls for all SSCL machines will be developed. It is limited in scope to only that infrastructure which is common to all machines. Particular implementations or special requirements of various machines are covered in level 4 control specifications.

This document is also limited to specifying controls for those systems which directly affect the accelerated beam, and are, to first order, the responsibility of the Accelerator Systems Division Controls Department (ASD/CD). The GACS specifically does not include Energy Management Control Systems (EMCS), Building Automation Systems (BAS), or Heating, Ventilation, and Air Conditioning (HVAC) systems. Also not included is the control system involved in the physics (detector) data acquisition and control.

Note, that while this document will specify certain high level software requirements and some will be inferred by specifications of system performance, detailed requirements for software are covered in the GACS Level 3B Software Requirements Specification, which should be used in conjunction with this document.

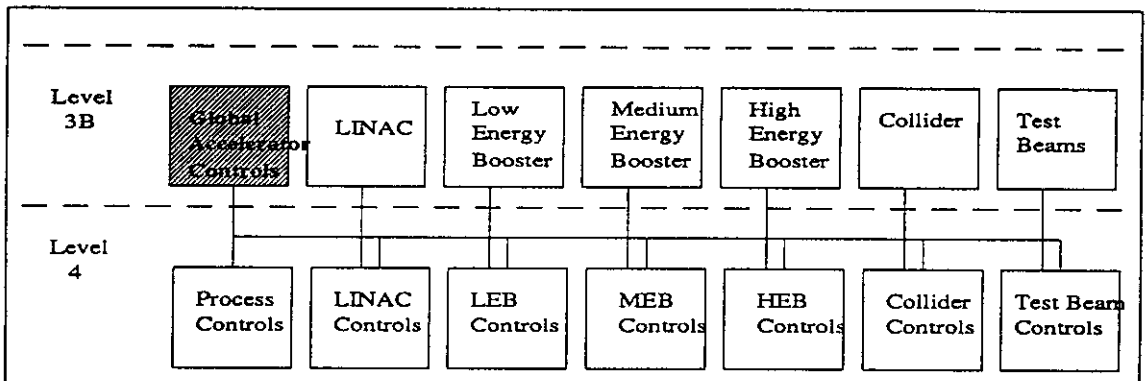

• Figure 1 SSCL Controls Specification Tree

1.3 APPLICABLE DOCUMENTS

The following documents form a part of this specification to the extent specified herein.

1.3.1 SSCL DOCUMENTS

ABD-xxxxx	GACS Level 3B Software Requirements Specifications
P40-000151	SSCL Standard - Mnemonic Device Naming Convention
ABD-xxxxxx	ASD/CD Standard for VME Device Access

1.3.2 Non-SSCL DOCUMENTS

1.4 Definitions, Acronyms, and Abbreviations

2.0 GENERAL DESCRIPTION

2.1 Project Overview

The SSC consists of a series of six accelerators: an injector complex made up of a LINAC, a Low Energy Booster (LEB), a Medium Energy Booster (MEB) and High Energy Booster (HEB), as well as two storage rings together known as the "Collider". A summary of some of the main parameters of these machines is given in Table 1.

Table 1:

Parameter	LINAC	LEB	MEB	HEB	Collider
Energy Range (Gev)	0 0.6	0.6 - 11	11-200	200 - 2000	2000 - 20000
Circumference (km)		.54	3.96	10.89	87.12
Cycle Time (secs)	0.1	0.1	3	12	3000
Number of Signals	6000	23000	27000	58000	430000

Although controls requirements and issues related to this complex of accelerators are not inherently different from those of others large accelerator laboratories, some special problems result from the large number of control points involved (544,000?), the great distances between the various components (up to approximately 100 km), and the very high reliability required (.986 availability for the global control system).

2.2 Primary Functions

The primary function of the GACS to is provide an infrastructure such that all of the various control systems involved with the SSCL machines and their components can be integrated into a single SSCL operations and control system. The key components of such as infrastructure are software, processing and support equipment, timing, and communications.

2.2.1 GACS Software Infrastructure

Due to the scale of the SSCL, many processors will be required for controls (>1500?). Additionally, many people will be involved in control application development, often independently. Therefore the key functions that the software infrastructure must provide are:

- A mechanism of developing, maintaining, and distributing a large realtime database.

- A standard set of methods to allow sharing of data among the control processors, operator stations, compute servers, and outside resources. These methods must allow any processor in the system to communicate data with any other process/processor by having knowledge of only the SSCL standard mnemonic name for that data.

- A standard programming environment. This includes an Application Programmers Interface (API) to allow generation of code with standard programming languages and Configuration Tools for the development of applications using pre-built code blocks.

- Standard system support software. This would include common control functional requirements such as Man-Machine Interfaces, alarm handlers, boot services, data archivers, etc.

2.2.2 Communications

In the context of this document, communications refers to that system through which processors communicate data between each other, either real-time data or non-realtime information, such as file transfers, program down-loads, etc. It will be key in the development of the GACS, as the system will have properties of a SCADA system, with controls widely distributed over long distances (>100km), and properties of a local area system, i.e. high bandwidth requirements (>2Gbits/sec?). The primary functional components communications must provide are:

- A communication backbone capable of the long distances and high bandwidth for all the machines
- Multi-drop, standard local area networks to allow all processors to communicate data
- Point-to-point private data channels for processors which are tightly coupled
- Routers and other interface equipment which allow access to/from the backbone of the other network types
- Interfaces into computer equipment for entry onto the local/point-to-point nets
- A method of delivering deterministic realtime messages to many processors simultaneously for the proper coordinated sequencing of machine events and synchronizing processor clocks for timestamping of data

2.2.3 Timing

Many hardware components of the SSCL machines require precise timing and synchronization (nanosec range) for proper operation and data acquisition. The functional components to be provided by the timing system are:

- Precision clock generators, with message encoding capabilities
- Deterministic distribution system
- Local timing generators which produce variable length trigger pulses at variable delays from the precision clocks

2.2.4 GACS Model

In this document, the GACS will be specified by means of a model shown in Figure xxx. The GACS shall provide various components shown in the figure as the GACS infrastructure. These items are processing equipment, communications, software, and timing. Because requirements on the infrastructure components vary by where they reside in a control system, a six level functional hierarchy of control will be used and is shown as Level 1 through 6.

2.3 User Characteristics

2.3.1 Control System Development Interface groups

Various controls groups at SSCL are responsible for providing control subsystems and the GACS must ensure an interface to these groups and the systems they provide.

2.3.2 Operations Users and Modes

The GACS must meet the differing requirements of a number of groups of users (of the control system) needing various views of the accelerator and its components. Such users include:

- Equipment engineers
- Control system engineers
- Accelerator physicists

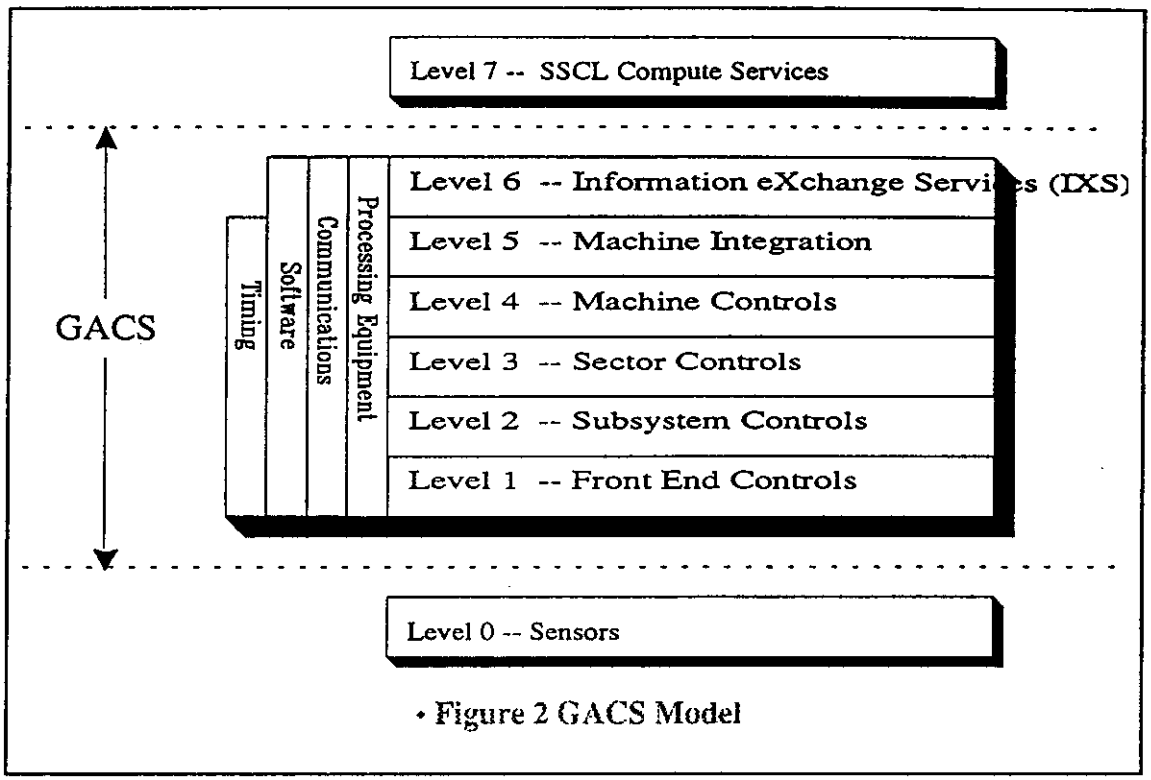

• Figure 2 GACS Model

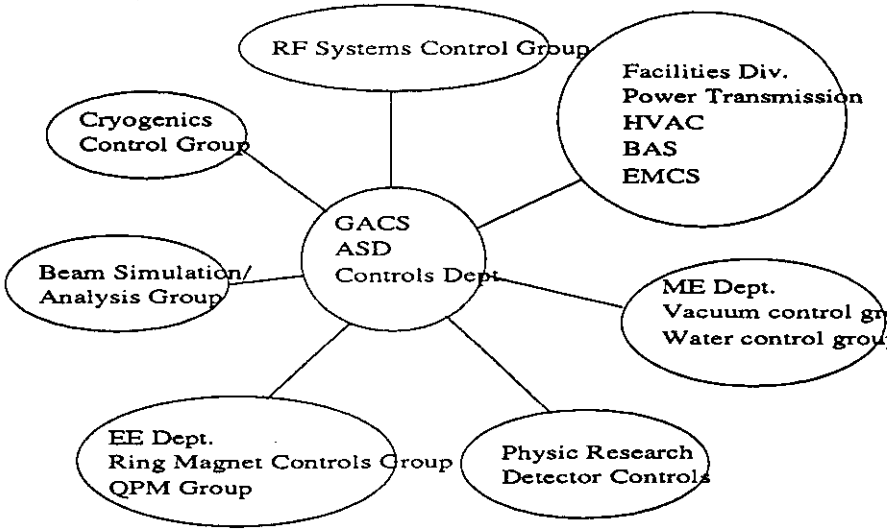

- Accelerator operators
- Experimental physicists
- Maintenance personnel
- Laboratory management
- Regulatory agencies

The requirements of these different user communities correspond roughly to the requirements levied on the GACS during different operating phases or modes, for example:

o Equipment and subsystem commissioning

o Accelerator commissioning

o Filling

o Routine operation for physics

o Beam quality improvement

o Special operating modes (test beams, medical use, pulse-to-pulse modulation, etc.)

o Maintenance

2.4 General Constraints

2.4.1 Open System

To the extent possible, the GACS shall be designed as an "Open System". By open system, it is implied that the system shall be designed such that:

- It does not rely on sole source proprietary equipment. The system shall employ components available from various commercial vendors such that the GACS does not become reliant on a single vendor for any key components.

- Makes use of standards, such as IEEE, ISO, POSIX, commercial defacto, etc., to (1) help avoid single vendor availability as mentioned above, and (2) Allow more rapid integration of new technology as it develops over the 10 year development cycle of the SSCL.

- Does not rely on proprietary software. This does not preclude the use of commercial software, which is almost always proprietary, in fact this is encouraged to reduce the amount of code reinvention. However, the GACS software infrastructure, on which all other software is built or built around, must be open (all source available and modifiable). While this last statement does not include computer operating systems, code will be developed such that it avoids, to the extent possible, making use of vendor specific operating system calls, such as in the various flavors of UNIX, which locks the GACS into a particular brand of operating system or compiler.

2.4.2 Standards

2.4.2.1 VME/VXI

2.4.2.2 POSIX

2.4.3 Equipment Locations

GACS equipment is limited to placement only in surface buildings (sector houses, service bldgs, control room) and niches within the HEB and collider.

Communication fiber optics right-of-ways are limited to conduits in tunnel floors and niches and conduits which connect the tunnels to surface structures.

2.4.4 Beam Controls vs. Process Controls

In the requirements section at the sector level controls, a requirement will be given that the GACS divide into two major subsystems: the Beam Control System (BCS) and the Process Control System (PCS). This division comes about as a result of:

- Operational modes. Systems and their controls which are required to operate only when beam is present in the machine, such as RF, magnet systems, beam instrumentation, etc. are put in the category of beam controls. These are also systems which directly affect beam acceleration and guidance. Systems and their controls which potentially

have to operate regardless of beam, such as cryogenics, vacuum, and water systems, are placed in another category. Since these latter systems have requirements highly similar to industrial process systems, they are grouped into the PCS.

- Because of the operational modes, these systems are required to function autonomously.

- The requirements of the BCS and PCS equipment are different. BCS equipment requires precision timing and synchronous operation to a much higher degree than the PCS equipment, along with high data communication rates. The systems of the PCS systems are relatively slow processes, therefore would not require many of the high speed control mechanisms of the BCS.

- The division into two systems allows design implementation flexibility. The majority, if not all, of the PCS requirements are dealt with by industrial, off-the-shelf, control equipment and software tools. Therefore, it leaves the option to contract commercially for this system. System-wide controls for the BCS are not found readily as off-the-shelf solutions.

3.0 REQUIREMENTS

3.1 Introduction

In this section, each level of the GACS model will be used as the template for defining system requirements. Within each level, the requirements for each of the infrastructure components (processors and support equipment, software, communications, and timing) will be stated, along with system performance.

3.2 Level 6 - Information eXchange Services (IXS)

3.2.1 Introduction

No true control functions are performed at level 6. This level is rather provides a pathway for the exchange of information between the GACS and other data management and computer services at the SSCL, such as central computing, office workstations, central databases, etc.

This level defines data access routines to be provided by the GACS, along with any computer gateway hardware and software requirements.

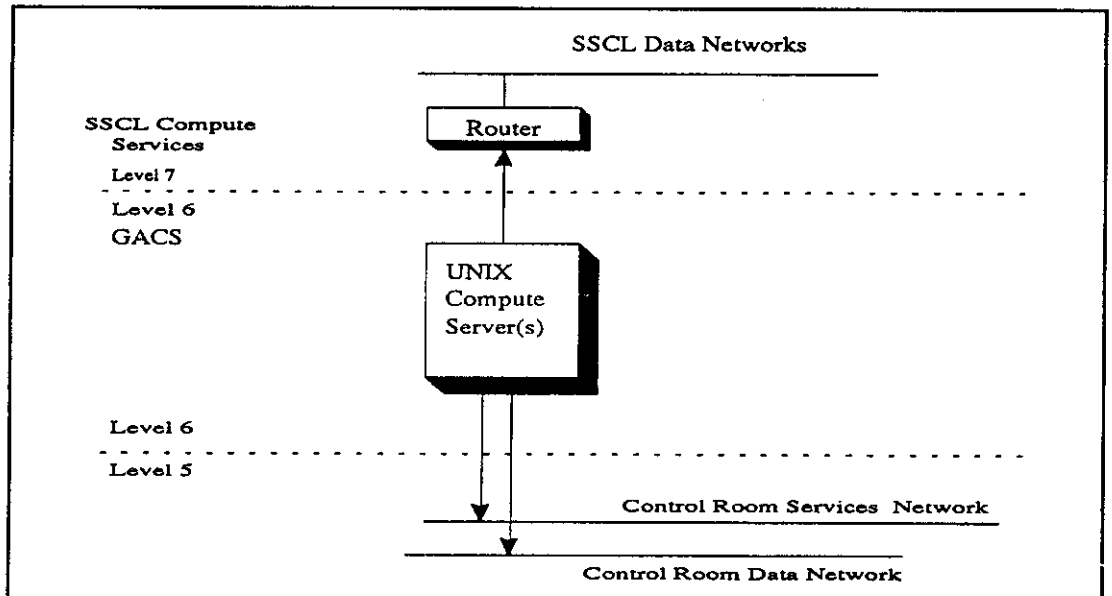

• Figure 3 GACS Level 6 - IXS

3.2.2 Processing and Support Hardware

The GACS shall provide UNIX computers to act as gateways between other SSCL computer networks and the SSCL control system.

3.2.3 Software Infrastructure

The GACS shall provide software necessary to accept data requests from outside systems, collect the desired data from the control system, and return this data to requestors. Detailed requirements are given the GACS SRS.

3.2.4 Communications

Network communication modules shall be provided as necessary to interface to both the networks outside the control system and the control system networks.

3.2.5 Timing

There are no timing requirements at level 6.

3.2.6 System Performance Requirements

3.2.6.1 Data Connections

The GACS IXS shall accommodate the simultaneous connection of up to 200 processes across SSCL networks to the GACS and 20 connection requests from GACS processors to outside resources.

3.2.6.2 Data Throughput

The GACS IXS shall support data throughput from outside requests:

- For single point realtime data, up to 500 points with update rates of <10 seconds.
- For realtime array data, up to 10 arrays of 25000 points or less within 10 seconds of request.
- For archived data, TBD.

3.3 Level 5 - Machine Integration

3.3.1 Introduction

At level 5, all machines of the SSCL are integrated into a single unit. This level includes a central control room for operations, with operating stations and support services. Also, a Global Timing System is at this level which provides for the synchronization and sequencing of all machines.

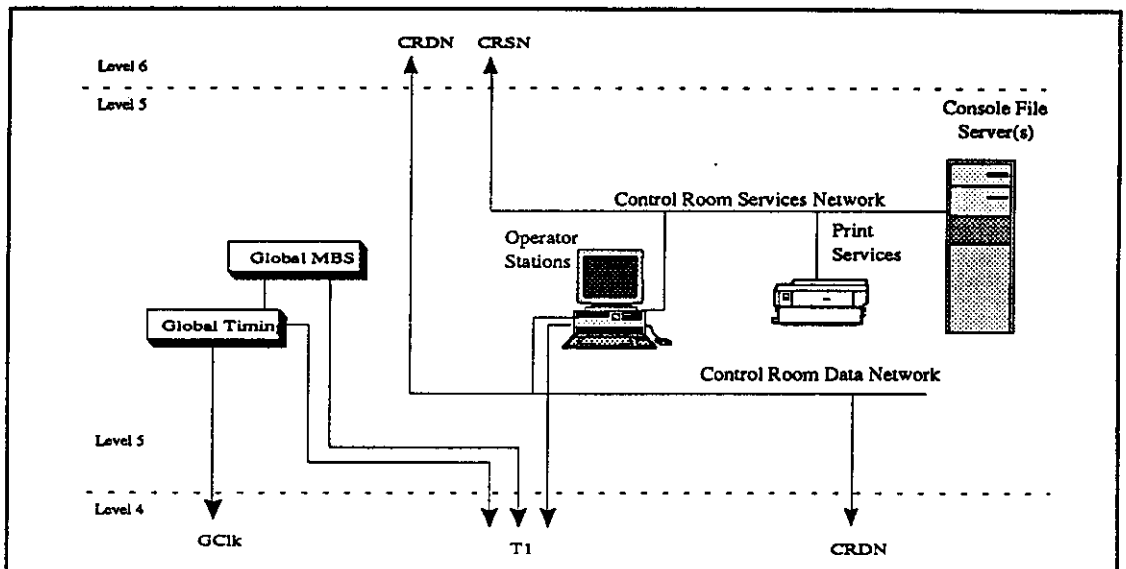

• Figure 4 GACS Level 5 - Machine Integration

3.3.2 Processing and Support Hardware

3.3.2.1 Operator Stations

The GACS shall provide an MMI to SSCL accelerator operators and support staff.

3.3.2.1.1 Equipment Provisions

The GACS shall provide a minimum of 12 operator stations located at the Central Control Room (CCR) for the operation of accelerator systems. The primary component of an operator station shall be a UNIX workstation. The general requirements for the workstation are:

- Mountable in a 19" rack cabinet, either directly or on a shelf mounted in the rack
- Configurable with a minimum of three, 19" high resolution (1280 x 1024 minimum) bit mapped displays.
- Multi-media capability i.e. capacity to display video as well as computer generated text and graphics.
- Minimum 400MByte internal disc for UNIX system and minimum application code storage.
- Support single keyboard, mouse, and multiple trackball interfaces

This equipment will be housed in suitable low bay 19" racks (or equivalent furnishings). While it is **not** required at this time to bring back any analog signals from the various accelerators, the console shall have sufficient space to house some rack mountable test equipment and video systems along with the computer equipment. Countertop area will be provided and sufficient to support two operators at a console.

3.3.2.1.2 Performance Requirements

The console UNIX computer shall have a minimum compute performance of 50SPECmarks. The associated graphic displays shall be capable of drawing >1 million vectors/sec.

3.3.2.1.3 Interfaces

Interfaces to the operator console computer are the three network types described later in the communications section.

3.3.2.2 Status Displays

In addition to operator stations, the GACS shall provide status and other displays which must be visible from multiple operator stations.

3.3.2.2.1 Equipment Provisions

TBD.

3.3.2.2.2 Performance

TBD

3.3.2.2.3 Interfaces

TBD

3.3.2.3 Server Systems and Peripherals

The GACS shall provide computer and printer equipment as necessary to support:

- Resources required by operator stations, such as MMI display files

- Database stores for exchange of data, formatted into commercial databases, between the GACS and other SSCL compute services

- Hardcopy of control system data

3.3.2.3.1 Equipment Provisions

The GACS shall provide UNIX file servers.

The GACS shall provide TBD printers for hardcopy of GACS data.

3.3.2.3.2 Performance Requirements

TBD

3.3.2.3.3 Interfaces

This equipment shall interface to the Control room services network as described later.

3.3.3 Software Infrastructure

At this level, the GACS shall provide the necessary MMI software for operator stations and data communications capabilities as specified in the GACS SRS.

3.3.4 Communications

3.3.4.1 Networks

3.3.4.1.1 Control Room Services Network

This network type is intended for non-realtime control use, such as file transfers, workstation booting, data store transfers to other SSCL sites, etc. It is specified as a separate network(s) to attempt to eliminate this type of traffic from any realtime control nets.

3.3.4.1.1.1 Equipment Provisions

This shall be a standard computer network (Ethernet, FDDI) running on coax cable with appropriate computer interface modules provided.

3.3.4.1.1.2 Performance

TBD

3.3.4.1.1.3 Interfaces

This network shall interface to operator consoles in the control room, as well as file servers and peripherals.

3.3.4.1.2 Control Room Data Network

This network shall have access to all GACS realtime data from all levels of the GACS. It is intended that this network be kept clear of all other data traffic.

3.3.4.1.2.1 Equipment Provisions

This shall be a standard computer network(s) (Ethernet, FDDI) carried over coax cable. Suitable interface modules shall be provided.

3.3.4.1.2.2 Performance

TBD

3.3.4.1.2.3 Interfaces

This network shall interface to operator stations and machine realtime data routers (discussed in level 4).

3.3.4.1.3 Realtime Network (T1)

In addition to the standard computer network used for realtime data specified above, the GACS shall provide point-to-point deterministic networks for realtime data. More detail on this system is given in level 4.

3.3.4.1.3.1 Equipment Provisions

The GACS shall provide standard T1 telecommunication links in the control room over twisted pair cable. The GACS shall provide all necessary T1 interface modules for insertion into equipment which it connects.

3.3.4.1.3.2 Performance

As defined in the telecommunications standard for T1 transceivers.

3.3.4.1.3.3 Interfaces

At this level, T1 shall interface with operator stations, the timing and MBS systems.

3.3.4.2 Global Message Broadcast System

The GACS shall provide a method to deliver time sequenced message data to control processors located throughout the SSCL accelerator complex with deterministic delivery and response. The function of the GMBS is to deliver high level timed machine events to the MBS system of each machine for the overall coordination of all processes running synchronized tasks.

The GACS shall also provide time synchronization of all processors for the purposes of timestamping data and data correlation. The secondary function of the GMBS is to provide this reference time.

The GMBS is defined as the top end of this system, and must have the capability to:

- Receive and store event tables from other controls processors.
- Provide for external selection of event buffer to be executed and transmitted
- Clock out events at predetermined times in accordance with these tables.
- Maintain and transmit time-of-day information for global synchronization of processor clocks.

3.3.4.2.1 Equipment Provisions

The GACS shall provide all processors and ancillary modules packaged in and conforming to VME/VXI standards as defined in CDS-93002, CDS-93003, and CDS-93007. Equipment provided shall include:

An MBS Formatter, which shall:

- Accept message input from GACS processors
- Check for correct syntax
- Ensure message request is within the performance envelope of the system
- Ensure request can be carried out given the priority of the message requested

An MBS Transmitter, which shall:

- Maintain a list(s) of message to be transmitted
- Accept updates from the formatter
- Report message status and errors
- Output each message at the appropriate time

3.3.4.2.2 Performance

Message Size	Variable, 3 to 13 Bytes
Locked to:	GCLK
Minimum throughput	100KBytes/sec
Resolution:	better than 100usec
Accuracy:	better than 1 msec

3.3.4.2.3 Interfaces

Fiber Optic connection to GCLK

DSX-1 electrical interface to T1

3.3.5 Timing

Global Timing shall provide two functions:

- Generation and delivery of a 10Hz line locked trigger to the LEB RMPS System

- Generation of a precision clock with encoded machine events for delivery to machine timing systems and various local timing crates

A block diagram of the system is shown in Figure 5. All machines of the SSCL are synchronized to the LEB resonant magnet cycle, which is 10Hz. Specifically, the synch trigger is when B=0 in the LEB dipoles. Therefore, the trigger for GCLK synchronization is normally derived from the LEB RMPS system or an LEB reference magnet at 0 crossing. The GCLK generator shall be capable of switching to the 10Hz clock from the line synch unit for commissioning or maintenance activities of machines when the LEB magnet systems are not operational.

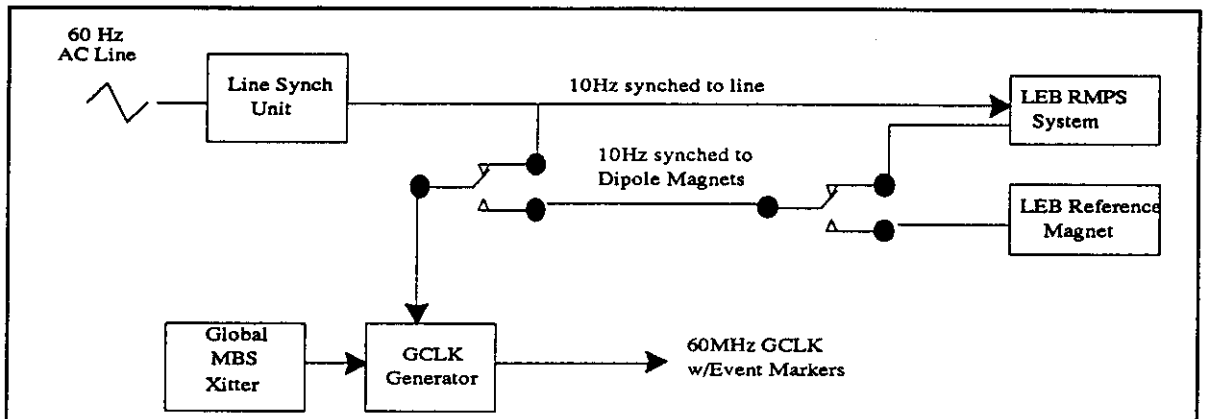

• Figure 5 GCLK System Block Diagram

3.3.5.1 Equipment Provisions

The GACS shall provide the necessary line synch unit, switching mechanisms, and GCLK generator. The GACS shall provide all processors and ancillary modules packaged in and conforming to VME/VXI standards as defined in CDS-93002, CDS-93003, and CDS-93007.

3.3.5.2 Performance

3.3.5.2.1 Line Synch Clock

Frequency	10 Hz, line locked
Jitter + Wander	TBD
Additional Req.	TBD

3.3.5.2.2 GCLK

Locked To:	Power Mains
Time-Base Range:	60MHz +/-.1%
Resolution:	1/Timebase
Jitter+Wander:	100 nsec/rms

Encoded Events: Machine Resets

3.3.5.3 Interfaces

3.3.5.3.1 Line Synch Unit

LEB AC power mains

RMPS System

3.3.5.3.2 GCLK Generator

Fiber Optic cable to Timing Distribution System

T1 links to GACS communications

3.4 Level 4 - Machine Controls

3.4.1 Introduction

Machine Controls is defined as that level at which all machine sector controls are integrated into an SSCL machine.

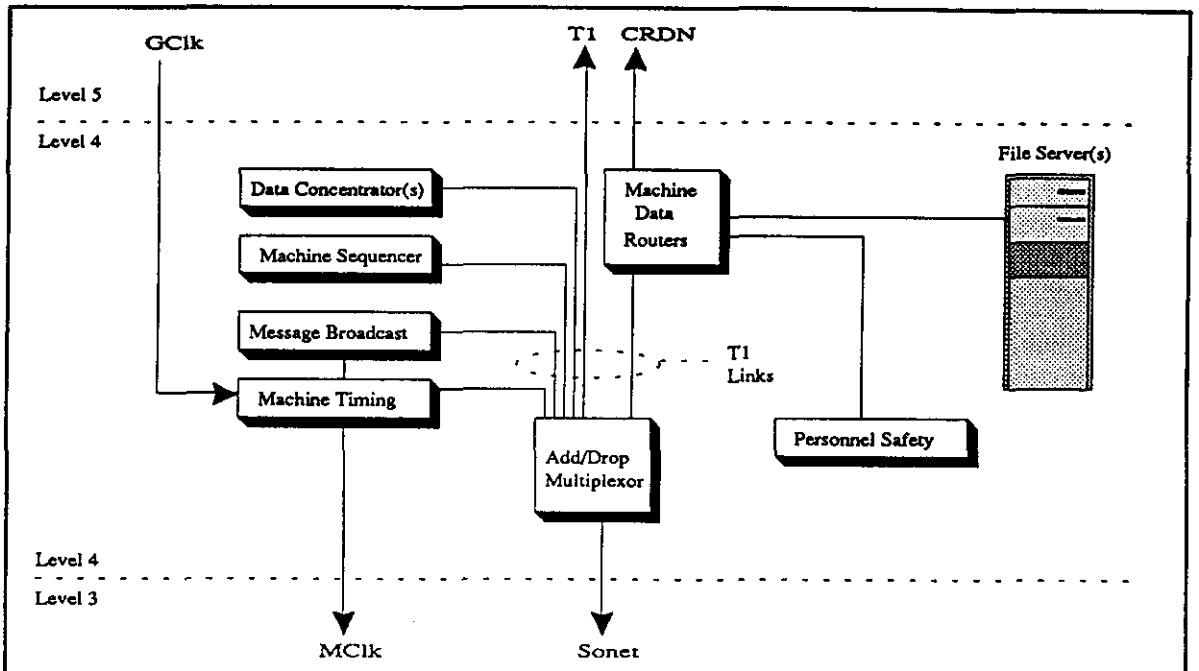

• Figure 6 GACS Level 4 - Machine Controls

3.4.2 Processing and Support Hardware

3.4.2.1 Data Concentrators

The functional requirements of data concentrators are to:

- Collect at a central location control system data from lower level processors
- Organize/synchronize that data for higher level analysis/control, such as BPM data
- Provide a single point for other systems to retrieve that data
- Perform high level sequences to coordinate systems such as beam instrumentation to collect desired data

3.4.2.1.1 Equipment Provisions

Data concentrators shall be provided as necessary using the same equipment as specified for IOCs at level 1.

3.4.2.1.2 Performance

TBD

3.4.2.1.3 Interfaces

T1 connection to ADM equipment

Standard communications network link to machine data routers

3.4.2.2 Machine Sequencers

3.4.2.2.1 Equipment Provisions

3.4.2.2.2 Performance

3.4.2.2.3 Interfaces

T1 connection to ADM equipment

Standard communications network link to machine data routers

3.4.2.3 File Servers

3.4.2.3.1 Equipment Provisions

3.4.2.3.2 Performance

3.4.2.3.3 Interfaces

T1 connection to ADM equipment

Standard communications network link to machine data routers

3.4.3 Software Infrastructure

3.4.4 Communications

From level 5 down through level 1, the GACS must supply data communications networks capable of:

- Providing point-to-point, deterministic connections between processors which will not degrade regardless of overall network loading where processors require tight coupling to perform their control tasks

- Multi-point network capabilities such that any processor in the GACS can communicate with any other processor

- Providing these network capabilities over long distances (100km or more) at high total bandwidths (2Gbits/sec)

- Providing redundancy and high reliability

To provide these features, the GACS shall supply standard telecommunications industry equipment and computer network routers capable of routine/bridging from telecommunication equipment and standard computer networks.

3.4.4.1 Synchronous Optical NETwork (SONET)

To form the communications backbone of each machine, the GACS shall provide SONET equipment.

3.4.4.1.1 Equipment Provisions

The GACS shall provide all fiber optic cables necessary to interconnect all service buildings and niches within a machine, along with SONET fiber optic driver units.

3.4.4.1.2 Performance

Dependent on machine data loads; this requirement will be given by machine in level 4 specifications.

3.4.4.1.3 Interfaces

SONET equipment shall interface into the communication ADM equipment.

3.4.4.2 Add-Drop Multiplexors (ADM)

ADM equipment shall provide for:

The access of T1 links onto the SONET backbone

The grooming of T1 links to allow subchannels to directed point-to-point between predetermined control processors. This grooming capability shall range from single DS0 channels to any multiple of DS0 channels within a T1 link.

3.4.4.2.1 Equipment Provisions

ADM equipment shall be provided wherever control system processors are housed in the various machines, both in service buildings and niches, as well as the central control room.

3.4.4.2.2 Performance

Machine dependent

3.4.4.2.3 Interfaces

Machine SONET backbone

T1 links to individual control processors, operator stations, and file servers

3.4.4.3 Machine Data Routers

Routers shall provide the function of allowing communication links between any and all processors in the GACS.

3.4.4.3.1 Equipment Provisions

The GACS shall supply a minimum of one network router for each machine.

3.4.4.3.2 Performance

Each router shall be capable of switching a minimum of 300,000 IP packets/sec

3.4.4.3.3 Interfaces

Routers shall support T1, Ethernet, and FDDI interfaces.

3.4.4.4 MBS

Requirements for the Machine MBS is identical to the GMBS specified at level 5.

3.4.5 Machine Timing

The primary function of the Machine Timing Generator is to provide high precision revolution markers to synchronize control and data collection in the RF, Beam Instrumentation, kicker, and machine synchronization systems. These markers shall be encoded to allow the extraction of cycle number information and first turn in a cycle information.

3.4.5.1 Performance

There is one timing generator for each machine. Requirements are given in the following table.

Table 2:

Timing Signal	Locked To	Time-Base Range	Resolution	Phase Shift (buckets)	Jitter + Wander nsec rms
LClk	LEB RF	47MHz-60MHz	1/Timebase	30	
MClk	MEB RF	df=180KHz @60MHz	1/Timebase	3	Phasing: .2 Kickers: 1 Other: 10
HClk	HEB RF	df=700Hz @60MHz	1/Timebase	.02	Phasing:.2 Kickers: 1 Other: 10
TClk	Top Collider RF	df=10Hz @60MHz	1/Timebase	.07 @360 MHz	Phasing: .03 Kickers: .38 Other: 10
BClk	Bottom Collider RF	df=10Hz @60MHz	1/Timebase	.07 @360MHz	Phasing: ..03 Kickers: .38 Other: 10

3.5 Level 3 - Sector Controls

3.5.1 Introduction

"Sector" is derived from the terminology of the Collider, which is divided into ten sectors correlating to cryogenic refrigerator plants and other surface facilities. In the context of this specification, sector controls applies only to the Collider, defined as consisting of 10 sectors, and the HEB with two sectors. The warm machines and Test Beams do not have sector controls, but rather level 4 connects directly to level 2.

At this level, the GACS shall be divided into two systems: a Process Control System (PCS) and a Beam Control System (BCS). The BCS is defined to include all systems directly associated with beam operation, which are RF, PASS, all magnet systems, QPS, and beam diagnostics. The PCS includes the systems which are support systems, specifically cryogenics, vacuum, LCW and ICW. In the controls specification tree shown earlier, PCS is treated as a machine at level 4 of the spec tree. Detailed requirements for the PCS can be found in that document.

In the diagram of Figure 7, the PCS includes the item labelled Router and all items to the left. The BCS at level 3 includes the equipment to the right. Each system shall be capable of independent, stand-alone operation.

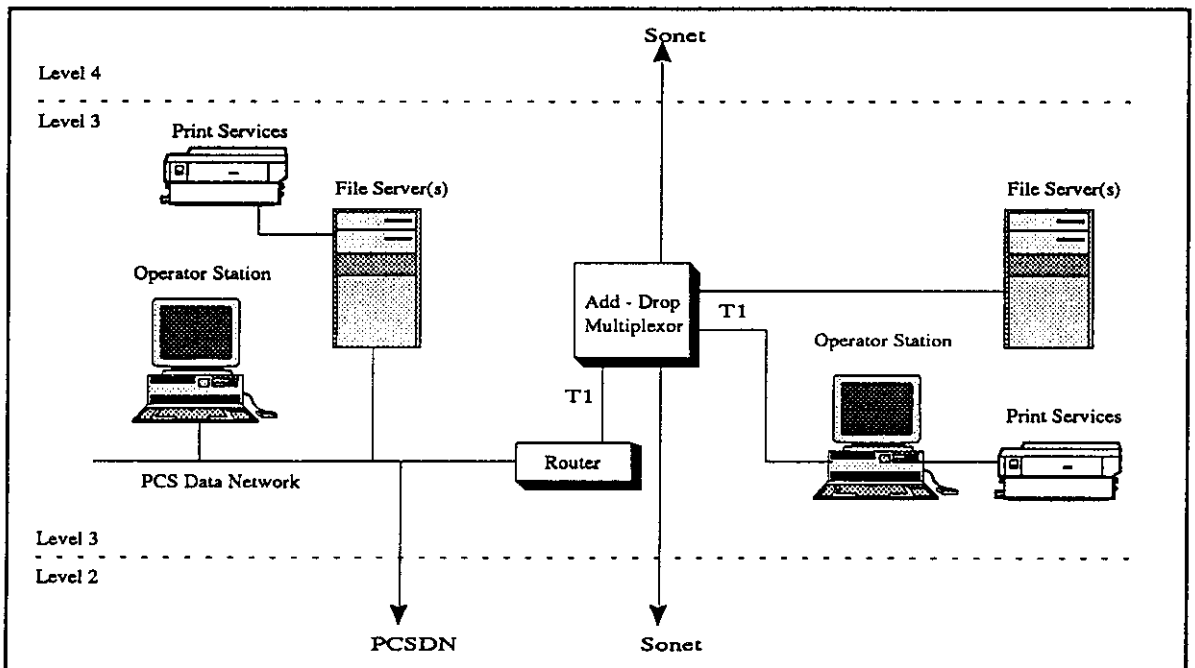

• Figure 7 GACS Level 3 - Sector Controls

3.5.2 Processing and Support Hardware

3.5.2.1 BCS file servers

File servers shall provide the same functionality and performance as those defined at the machine level. They are shown here as sector controls for the HEB and Collider as it is required that each sector shall be capable of stand-alone operation independent of communications and other equipment residing at higher levels.

3.5.2.2 BCS Operator Station

Each sector house shall contain a permanent operator station with the same functionality of higher level stations, only the requirements for the equipment provided are different. At this level, a single monitor workstation shall be provided, rack mountable. No console furniture need be provided.

3.5.3 Software Infrastructure

3.5.4 Communications

3.5.4.1 Networks

3.5.4.2 MBS

3.5.5 Timing

No precision timing signals are required at this level.

3.5.6 System Performance

3.6 Level 2 - Subsystem Controls

3.6.1 Introduction

This level is defined as that which logically combines a group of front end systems into a control unit. Using this definition, subsystems of control are shown in Figure xxx.

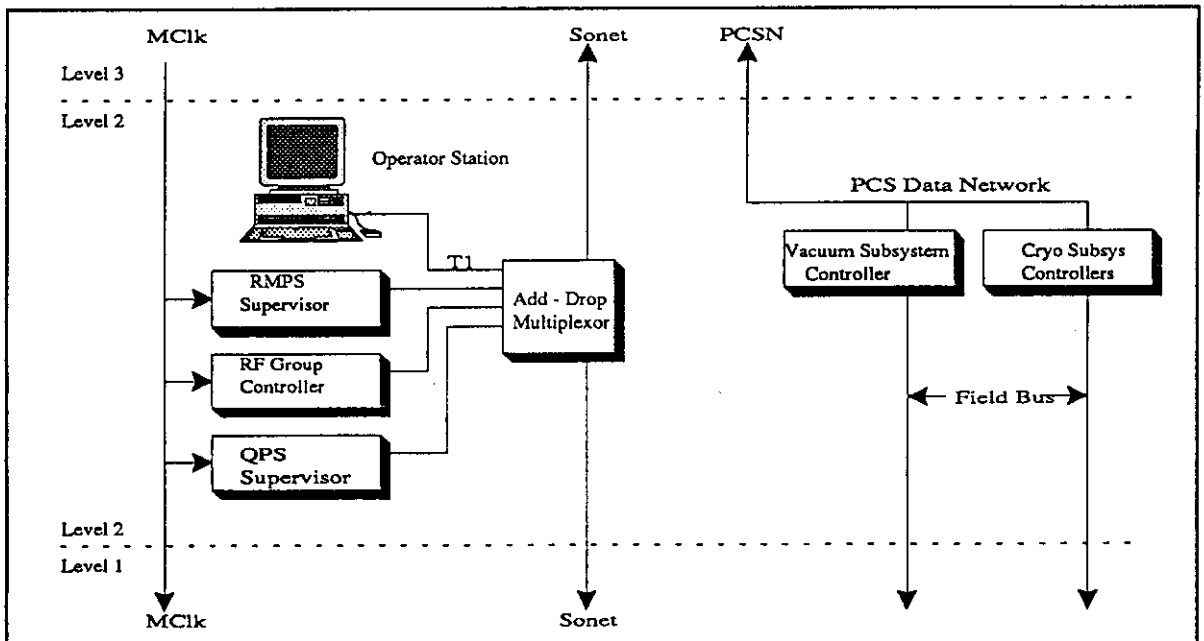

• Figure 8 GACS Level 2 - Subsystem Control

3.6.2 Processing and Support Hardware

3.6.2.1 RMPS Supervisor

3.6.2.2 QPS Supervisor

3.6.2.3 RF Group Controller

3.6.2.4 Vacuum Subsystem Controllers

3.6.2.5 Cryogenic Subsystem Controllers

3.6.3 Software Infrastructure

3.6.4 Communications

3.6.4.1 Networks

3.6.4.2 MBS

3.6.5 Timing

3.6.6 System Performance

3.7 Level 1 - Front End Controls

3.7.1 Introduction

The following figure shows a breakout of Level 1 of the GACS model. Included in this level are:

Interconnects: A system of connecting sensor cabling into the GACS

Signal Conditioning: A method to isolate/condition sensor signals prior to connection into I/O modules.

I/O interface: Modules which accept sensor data and translate them to/from the analog/field bus protocol to/from a digital format for interfacing onto a computer I/O bus.

I/O Bus: The data transfer medium between the I/O interface module and a I/O Control (IOC) processor.

Processor: A programmable device which performs local control tasks

Local operator station: A temporary portable computer through which maintenance/commissioning personnel can interact with the Front end processor.

3.7.2 Processing and Support Hardware

The primary components of the level 1 GACS are shown in figure xxx. These are an Input/Output Controller (IOC) crate, power conditioning and optionally, signal conditioning units, 24VDC power supplies, and a cross connect system.

3.7.2.1 IOC Hardware

The IOC shall consist of a processor and I/O modules in a VME/VXI crate.

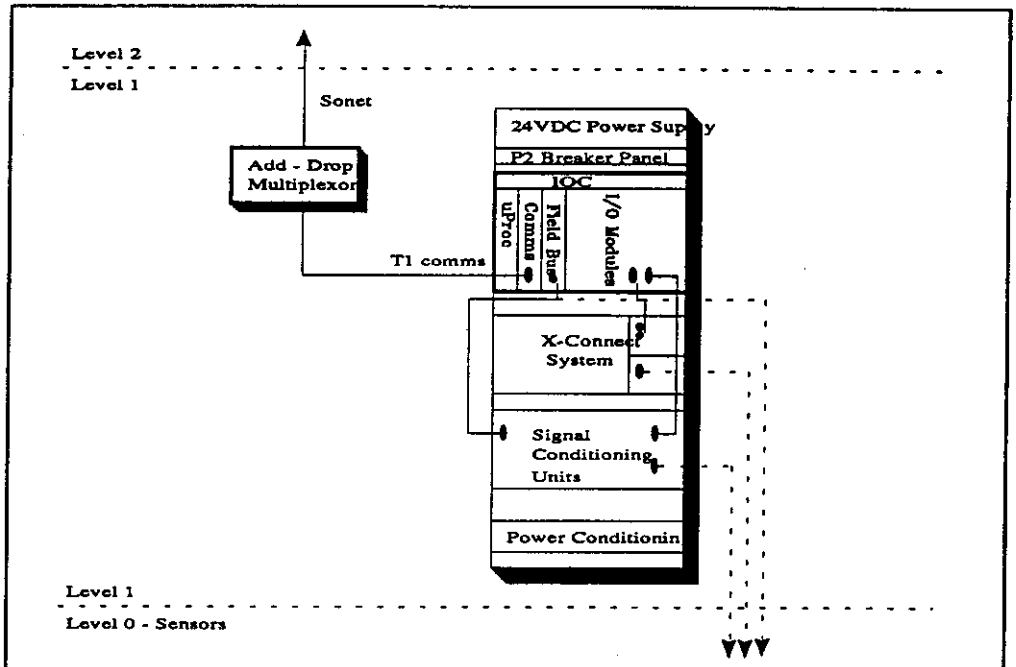

• Figure 9 GACS Level 1 - Front End Controls

3.7.2.2 Crate

The GACS shall support VME crates in accordance with specifications set forth in Controls Department Standard for VME crates CDS-93002.

The GACS shall support VXI crates in accordance with specifications set forth in Controls Department Standard for VXI crates CDS-93003.

3.7.2.3 Processor

The processor shall be a single board computer in a VME/VXI format as listed in Front End Controls Supported VME/VXI Modules CDS-93006.

3.7.2.4 General I/O Modules

Requirements for I/O modules will vary by application. Wherever possible, the modules used shall be those as listed in Front End Controls Supported VME/VXI Modules CDS-93006. Where new module types are required, either commercial or custom, they shall conform to Controls Department Standard for VME/VXI modules CDS-93xxx and requests made to ASD/CD for driver development and insertion into CDS-93006.

3.7.2.5 GACS Special I/O Modules

3.7.2.5.1 Beam Abort

The GACS shall provide a beam abort system for the MEB, HEB, and Collider.

3.7.2.5.2 Corrector Power Supply Controllers

The GACS shall provide power supply control modules in VME for all magnet systems other than the RMPS.

3.7.2.6 Field Bus Support

3.7.2.7 Front End Support Equipment

3.7.2.7.1 X-Connect System

The cross connect system serves the function of interconnecting field cables from sensors/electro-mechanical operators with the VME/VXI modules. Cross connect systems shall meet the requirements as defined in CDS-93004.

3.7.2.7.2 Power Conditioning

3.7.3 IOC Software

3.7.3.1 Infrastructure

The GACS shall provide those portions of the software infrastructure which provide the functionality requirements, as described in the SRS, for real-time systems. This includes a real-time operating system and real-time controls kernel. Further requirements are also placed on the software infrastructure in the following section on "IOC System Performance".

3.7.3.2 Applications Software

The GACS shall provide all applications software required by the beam instrumentation at level 1. For all other systems, the GACS shall provide the tools and support to develop level 1 applications.

3.7.4 Communications

The GACS shall provide network communication modules at each IOC as specified in CDS-93xxx.

3.7.5 Timing

The timing system shall provide clock signals to front end equipment in the form of 5VDC triggers. These triggers shall be adjustable in both delay and pulse width.

3.7.6 IOC System Performance

3.7.6.1 Processing

Due to still evolving subsystem designs, both hardware and software, a key requirement is for flexibility in the system to apply varying degrees of processing power to meet individual needs. Therefore, the GACS shall:

- Support various processor boards with minimum performance of a Motorola 68040 and higher performance RISC processor modules

- Software shall employ a POSIX compliant, commercially available real-time operating system such that the software infrastructure can be more readily ported to higher performance platforms as they are introduced over time.

3.7.6.2 Stand-alone operation

With all communications disconnected or otherwise inoperative, each IOC shall be capable of continued stand-alone operation.

3.7.6.3 Local Operations

The system shall be capable of stand-alone operation with a portable UNIX workstation. From this local connection, the system shall be capable of:

- Downloading/Uploading IOC applications/configurations
- Perform basic MMI operations
    - Parameter pages
    - System Diagnostic pages
    - Alarm pages