SSCL-N-842

Fast Receiver for Low-Voltage-Swing Signals

G. Vanstraelen

Superconducting Super Collider Laboratory*
2550 Beckleymeade Ave.
Dallas, TX 75237

December 1993

*Operated by the Universities Research Association, Inc., for the U.S. Department of Energy under Contract No. DE-AC35-89ER40486.

FAST RECEIVER FOR LOW-VOLTAGE -SWING SIGNALS

Guy Vanstraelen
SSC Laboratory - Physics Research Division

I. Introduction

A new fast receiver for low-voltage-swing signals is described. The basic circuit is derived from the classical Operational Transconductance Amplifier (OTA). A serious problem of classical OTAs is the long recovery time. In an improved design, this problem is eliminated by the introduction of a new form of dynamic biasing, referred to as 'recovery feedback'. The resulting circuit is called OTA with Recovery Feedback or simply OTA-RF. In the next sections the schematic of the complete receiver will be explained and its performance will be compared with that of a classical OTA receiver. In a final section experimental results of a prototype implemented in a 1.2 μm CMOS process, will be presented.

II. Basic receiver configuration: OTA and OTA-RF

This section compares a classical OTA receiver with an OTA-RF based design. Both receivers are basically comparators followed by an inverter stage to get a full voltage swing. The Operational Transconductance Amplifier (OTA) provides simplest and most straightforward approach [1,2]. It is depicted in Figure 1.

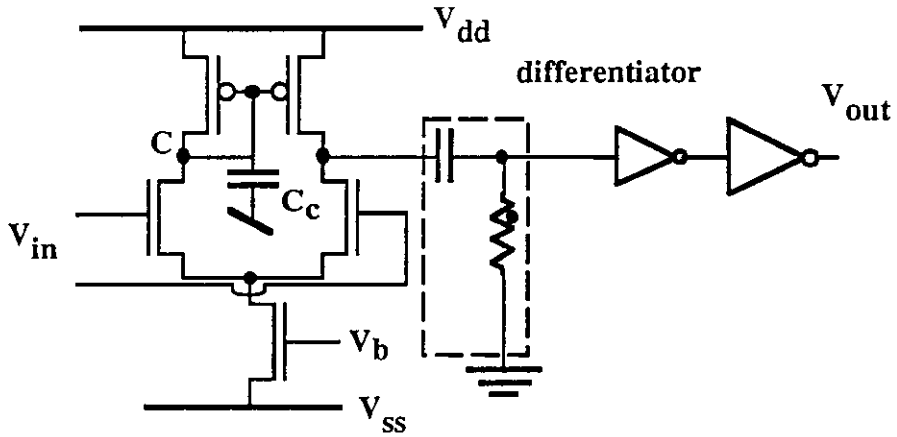

Fig. 1: OTA as receiver.

A very well known disadvantage of OTA type comparators is their limited speed and this is why often a differentiator is added. The limited speed is illustrated by the dashed line in Figure 2, showing the response as predicted by HSPICE. It is seen that the speed problem is mainly due to a poor recovery time. In this figure, 'comparator' is related to the comparator only, 'receiver' is related to the comparator including the output inverters. Using Figure 1, an explanation for this handicap is the following. When an input signal is applied, the input branch responds very fast. Its only pole is g_m/C_c, with C_c is the capacitance of the current mirror node C. The response of the input branch is passed on to the second branch, which also reacts very fast to the strong driving signal. When the input signals disappears, the input branch recovers rapidly. This means that there is no driving signal for the second branch any more, which can cause an extra output voltage recovering current to flow in this branch. The result is that only the very small current difference (DC current minus actual current flowing in the second branch) is available for recovery. Consequently, recovery will take a long time. This situation can be improved by using a dynamic biasing of the output branch, as is shown in Figure 3. In this comparator, which is called OTA with Recovery Feedback (OTA-RF), the extra device is also added to the input branch in order to keep a symmetrical structure.

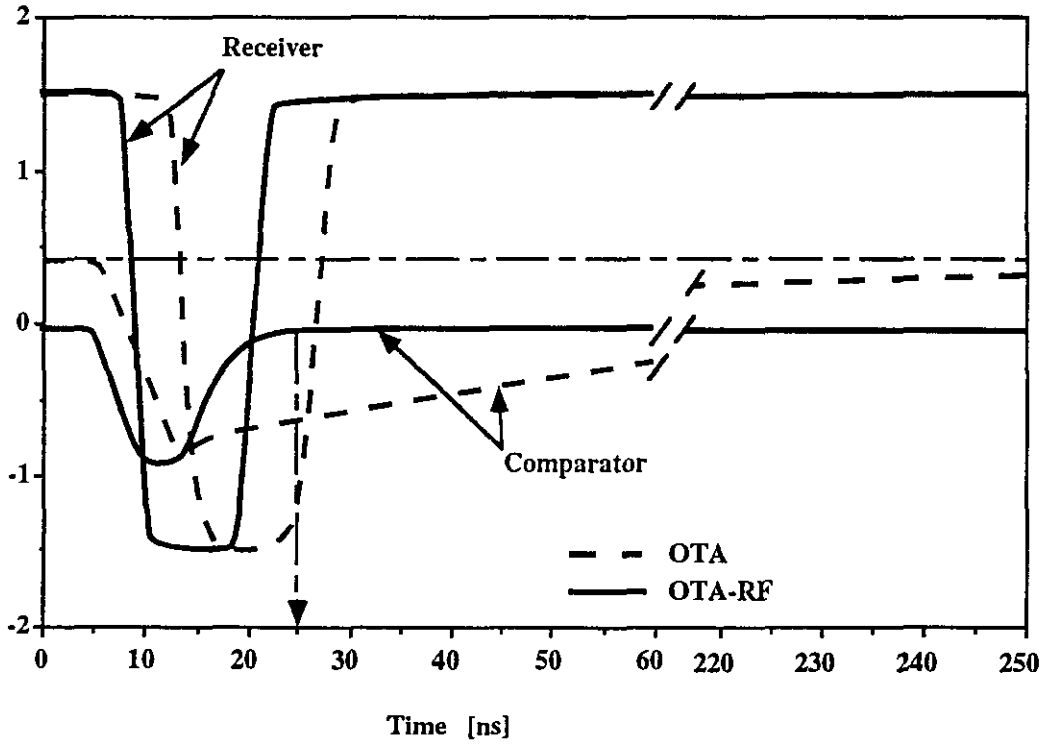

Fig. 2: Comparator and receiver output signal s for the case of OTA and OTA-RF.

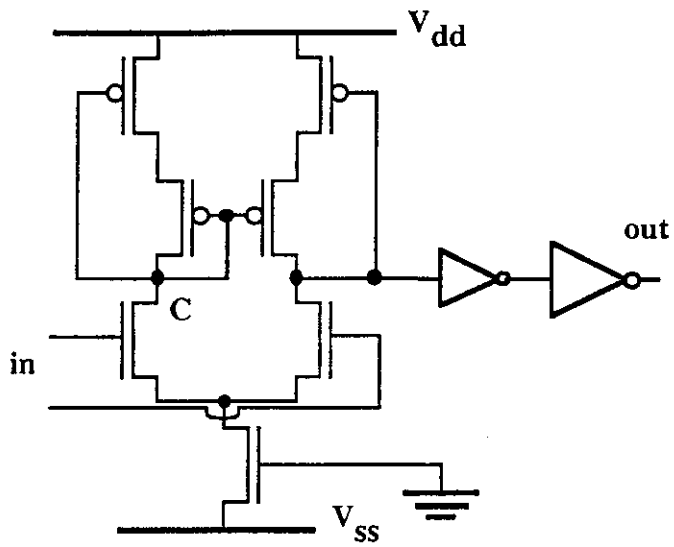

Fig. 3: OTA with Recovery Feedback (OTA-RF).

When a positive input signal is applied, the current mirror node C will show a negative signal. This effects the output and input branch in different ways. In the output branch, the signal will cause the output voltage to rise and since the latter is fed to the gate of the upper bias transistor, it reduces the current in the output branch. This will cause the output node to recover. In the input branch, the negative output voltage increases the bias current temporarily, such that the current mirror node C is helped to recover. The recovery feedback does not, as one could expect, kill the output signal or decrease the gain strongly. This is because the recovery feedback only reaches its maximum effect when the output signal is maximum. The solid line in Figure 2 illustrates the speed improvement brought by OTA-RF. Table 1 summarizes the main characteristics of both receiver types.

Table 1: Main characteristics of the two receiver types.

	OTA (3 V)	OTA (5 V)	OTA-RF (3 V)	OTA-RF (5 V)
Power [mW]	0.132	2.72	0.666	5.3
f_{max} [MHz]	5	50	89	200

Another important aspect of a receiver is its operation in the presence of a common mode signal, the Common Mode Rejection (CMR). As the simulation result in Figure 5 shows, proper operation is guaranteed for common mode voltage in the range -0.66 V to 0.48 V.

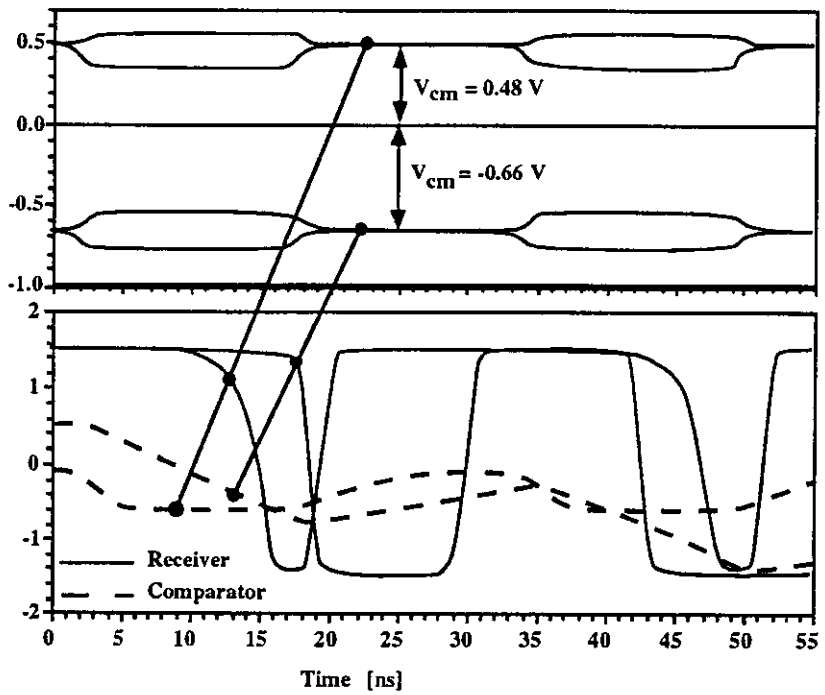

Fig. 5: Effect of a common mode voltage on OTA-RF.

III. Evaluation of a prototype.

A slightly modified version of OTA-RF (Fig. 4) was prototyped. In this circuit the gate of the current source is tied to the current mirror node. This is supposed to make the circuit performance less sensitive to process variations. Table 2 summarizes the simulated and measured characteristics. It shows that compared with the original circuit the speed is decreased while the power dissipation is increased.

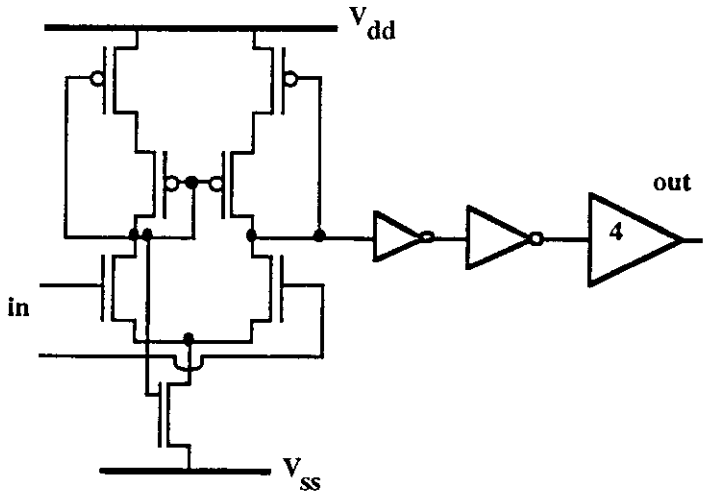

Fig. 4: Slightly modified OTA-RF.

Table 2: Simulated and measured characteristics of the modified OTA-RF.

	HSpice	Measured
Supply voltage	**3 V**	**3 V**
Power [mW]	0.666	0.506
f_{max} [MHz]	62	62
Resolution [mV]	55	65
CMR [mV]	+800/-915	+480 / -660
Delay [ns]	6.0*	7.1

* Output buffer not included

References

[1] B. Gunning et al, "A CMOS Low-Voltage-Swing Transmission-Line Transceiver", Proc. of 39th ISSCC, 1992, pp 58-59.

[2] R. S. Soin, F. Maloberti and J. Franca, Analogue-Digital ASICs, 1991, Peter Peregrinus Ltd., London, UK.