SSCL-N-833

# Outline of Collider RF System

Y. Zhao

Superconducting Super Collider Laboratory*
2550 Beckleymeade Ave.
Dallas, TX 75237

September 1993

*Operated by the Universities Research Association, Inc., for the U.S. Department of Energy under Contract No. DE-AC35-89ER40486.

**CONTENTS**


1. OVERVIEW 2
2. ACCELERATOR SYSTEM 6
   2.1 High power subsystem 6
   2.2 Low level RF subsystem 6
   2.3 Tuning loop 8
   2.4 The consequence of trip 9
3. FAST FEEDBACK SYSTEM 10
   3.1 Basic principle and functions 10
   3.2 The restriction of group delay 12
   3.3 The equalizer 13
   3.4 The asymmetry of the cavity 15
4. FEEDFORWARD AND SLOW LOOP 18
   4.1 Compensation of beam loading 18
   4.2 Damping of the injection error 20
   4.3 Damping of low order CBI 22
5. ACTIVE DAMPING SYSTEM 26
   5.1 High order mode 26
   5.2 The scheme of active damping 27
   5.3 The concerns about the active damping 28
      5.3.1. Power requirement 28
      5.3.2. The power source 29
      5.3.3. Selection of the kicker frequency 30
      5.3.4. The structure of the kicker 30
      5.3.5. Signal pick up subsystem 31
      5.3.6. The mechanism of kick and digital signal processor 32
      5.3.7. Down-sampling 33
ACKNOWLEDGEMENTS 34
REFERENCES 35

# OUTLINE OF COLLIDER RF SYSTEM

Yongxiang Zhao

## Abstract

The Collider RF must fulfil two main requirements. One is to raise the energy of the proton beams from 2 TeV to 20 TeV. To accomplish this the klystron amplifier chain and the accelerating cavity, as well as those conventional control loops are used. The other requirement is to ensure the beam quality and inhibit instabilities or increases of beam emittance. This note gives an outline of those major concerns as well as their remedies. The material is organized along with the "remedies" in order to give a clear image for the engineering design. Successively discussed are the accelerator system, the fast feedback loop, the feedforward and slow loop, and the active damping system. Also addressed are some special related problems.

# OUTLINE OF COLLIDER RF SYSTEM

Yongxiang Zhao

This note is intended to clarify the main works concerning collider RF and tries to bridge the physical design to engineering. Since the choice of the cavity is not yet decided, we still have some uncertainties at this moment.

## 1. OVERVIEW

The main requirements for collider rf are two folds. The first is to raise the proton beam energy from 2 to 20 TeV, including compensating for synchrotron radiation loss and other parasitic losses. The second is to maintain the bunching of the beam during the full process from injection by HEB until collision. Correspondingly, the engineering attention is also divided into two folds, the accelerator system and those concerning instabilities and increase of beam emittance.

The accelerator system is the major expense. The problems here are clear and the work concerned is more or less of routine, provided the main components, such as cavities and klystrons, have been specified.

The instabilities, on the other hand, have more varieties due to its complexity. Fig.1 shows schematically the main problems combining with the possible remedies. As one can see, one problem may have or need more than one remedy, while one remedy may cure or alleviate more than one problem.

For example, transient beam loading effect, injection error and fundamental CBI (coupled bunch instability) are different problems, but they all can be overcome, or at least alleviated, by virtue of fast feedback. Similarly, a feedforward system using the main klystron as the source, in priciple, can do the same job, though both have their advantages and restrictions.

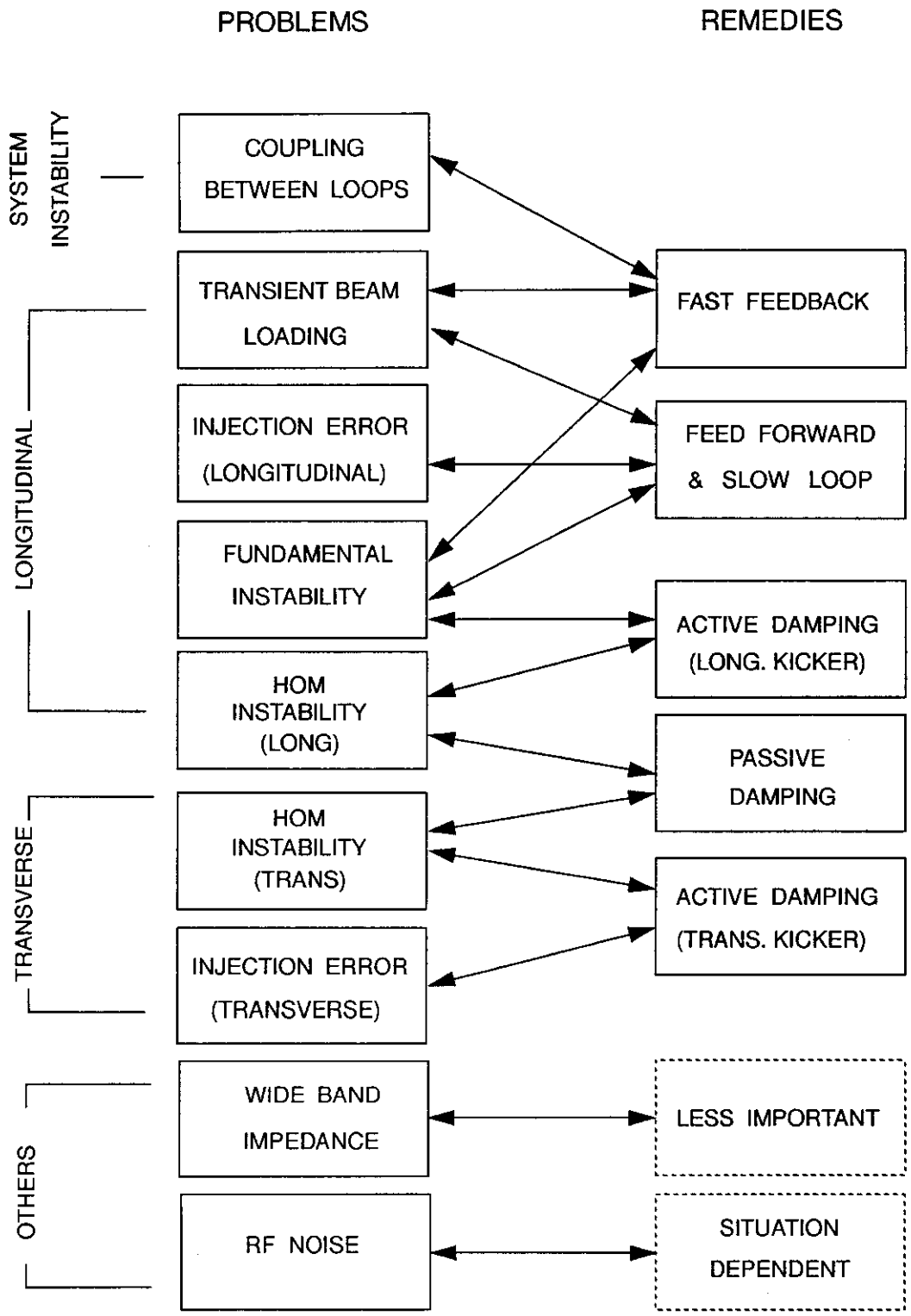


FIG. 1 THE SCHEMATICAL DIAGRAM

However, the most troublesome problem regarding longitudinal HOM (high order mode) instability needs both passive and active damping. Neither can damp enough to ensure the stability. Passive damping is performed by optimizing the cavity design to reduce the number of HOMs and their impedance. Obviously, it is necessary and important. A HOM free cavity would completely solve this problem, but it is not realistic to date. Therefore an active damper has to be employed to compensate the growth rate.

The transverse HOM instability is also of concern. An active damping system including a transverse kicker is thus needed. Since transverse kicker seems usually not necessary to apply very high power and most likely it will be assigned to the Beam Instrumentation Department, we will not discuss it here. The same is the problem regarding transverse injection error, which can be overcome by the same measure.

There are other concerns of rf, say broadband impedance, which mainly related to single bunch instability, and rf noise,[1] which may cause emittance growth. By general consensus they are less important in our Collider and thus not discussed here.[2]

## 2. ACCELERATOR SYSTEM

The accelerator system can be further divided into two folds, the high power subsystem and low level subsystem. Both associate with some interfaces. A scheme is shown in Fig.2. The following are brief descriptions.

### 2.1 High power subsystem

High power subsystem is the most costly part. It consists of a series of high power components: the klystron amplifier, circulator, dummy loads, transmission components including waveguide, magic tee etc., and the cavity.

The klystron assembly requires supporting systems, which include: high voltage power supply, magnet power supply, cooling subsystem, heater supply, ion pump supply, monitor and interlock.

The cavity, obviously, is of most concern. Since the issue (regarding normal conducting or superconducting cavity) is under investigation, we will not detail here.

### 2.2 Low level RF subsystem

The low level RF is essentially a network consisting of a few loops in addition to the amplifier chain. Conventionally there are three loops:

a). Cavity tuning loop, which ensures the cavity operates at desired detuning angles in different stages (injection, accelerating, storage), and automatically adjusting in pace with variation of the environment condition;

b). Amplitude control loop, which ensures the amplitude is ramped as programed, it also reduces the amplitude noise and fluctuation;

c). Phase control loop, which ensures the phase stability as well as phase ramp required at different stages.

Although above loops usually do not cause problems, one has to keep an eye on the possible coupling instability between loops when the beam current is quite large.

Nevertheless, extra loops are necessary to be employed to damp possible instabilities. The fast RF feedback loop, feedforward and slow loop, which make use of main klystron for its power source. Besides, the HOM active damper is also a loop, but physically it is separate with its own amplifier chain and cavity or kicker, and can be regarded as an independent loop. We'll discuss these issues later.

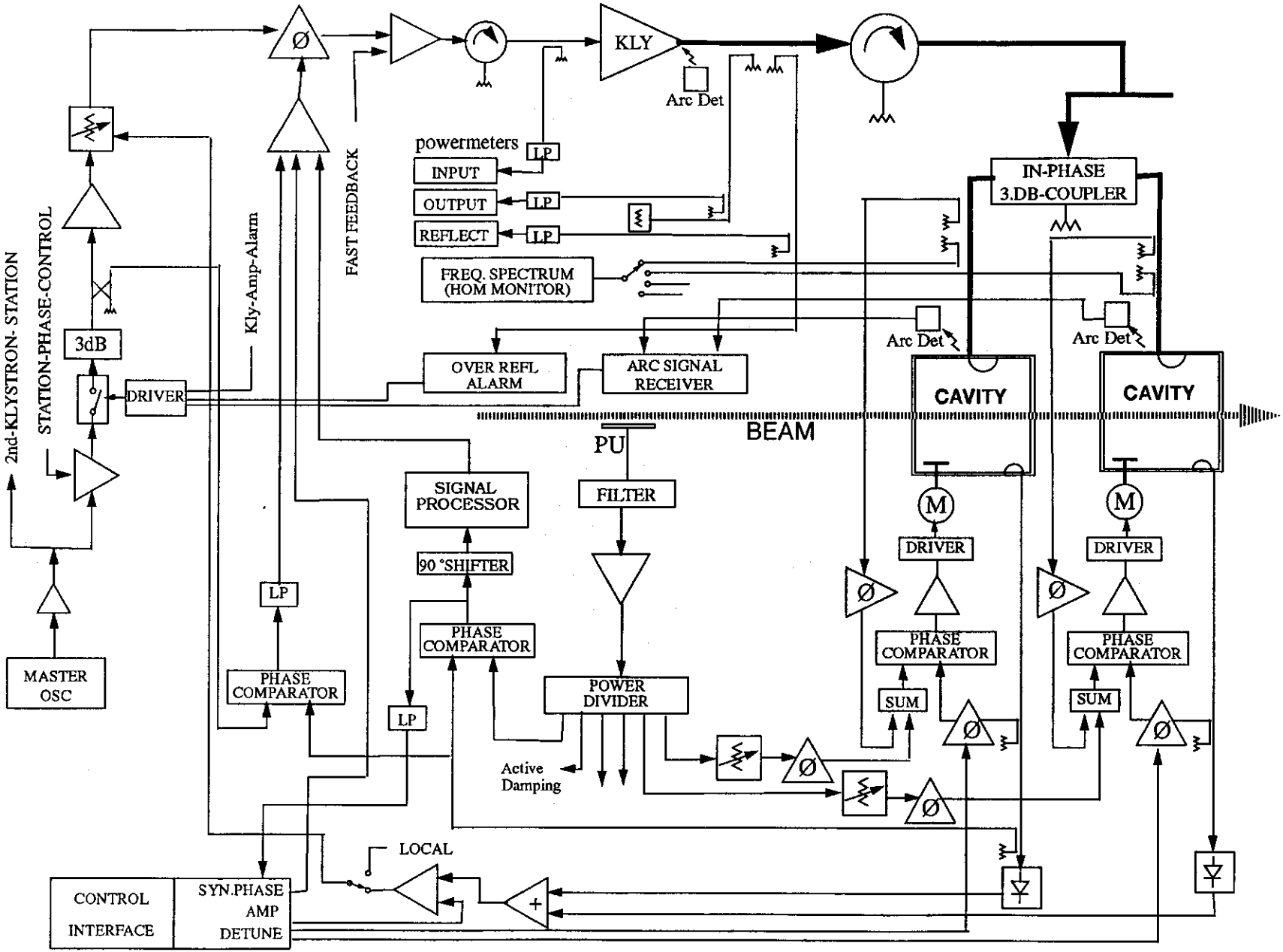


Fig.2 Collider RF system scheme

### 2.3 Tuning loop

One scenario being considered is to maintain the cavity exactly on resonance (no detuning), thus avoiding CBI's driven by the fundamental mode (see later). Conventionally, the resonant status is monitored by comparing the phase difference between cavity voltage and its generator current. That they are in phase means in resonance. The problem arises due to the fact that when the beam is on, the voltage will change in both amplitude and phase even though the cavity is tuned in resonant status. The issue is how to keep this status when other factors like temperature cause the cavity to drift off resonance. The tuning loop shown in Fig.3 will solve this problem.

Moreover, the conventional scenario requires that the cavity should be detuned to different angle at different stages (injection, accelerating and storage) with the beam loading being taken into account. This detuning angle can be controlled by the phase shifter PS3 in Fig. 3. A brief explanation is as follows.

The cavity voltage is determined by:

$$V = I_{tot} Z_{sh} = (I_g + I_b) R_{sh} \cos\Phi_c e^{j\Phi c} \qquad (2\text{-}1)$$

The detuning angle, $\Phi_c$, is the phase difference between voltage and the total current. Therefore we have to measure $I_{tot}$ first, which is the vector sum of $I_g$ and $I_b$. $I_g$ is the generator current that can be picked up from the inlet waveguide by virtue of a directional coupler. $I_b$ is the fundamental harmonic component of the beam current, so a filter is necessary to filter out all other components picked up from the beam monitor. Before summation of these two currents, we have to make sure these data having same scale and those phases are associate with the same reference, thus a set-up for calibration is employed. It has to consist at least a variable attenuator and a phase shifter. Here we use two phase shifters PS1 and PS2 for convenience.

The microwave vector summer can be either a power combiner or a hybrid. The later has the advantage of good matching performance, but has 3dB extra loss. The phase comparator can be a standard LLRF set-up.

The phase sample of the cavity voltage has a phase shifter PS3 in series, which can be preset at zero degree when the cavity is on resonance, meanwhile adjust the current signal to zero the output of the phase comparator. Then the loop will maintain the cavity on resonance. To detune the cavity in an angle Ø, simply set the PS3 at Ø degree,

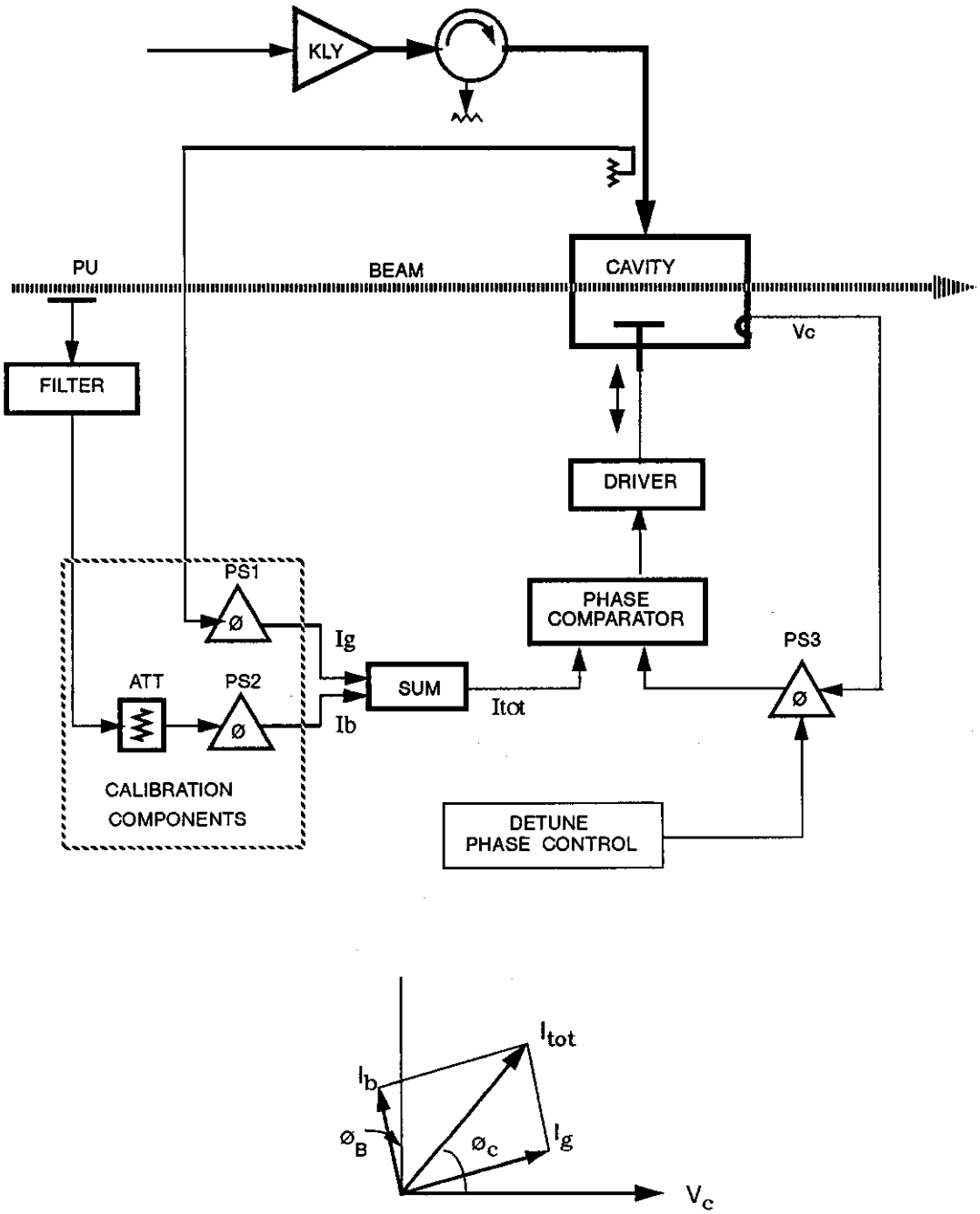


Fig. 3 Tuning loop

which can be controlled by program, and the loop will keep the cavity fixed at this status.

### 2.4 The consequence of trip

There are thousands of parts of the collider machine. Reliability is of course extremely important. Any single part failure must not result in shut off the whole machine. For example, two klystrons per ring is not safe, because if any one klystron fails the beam can not be sustained by the one and will be forced to shut off. From the point of view of engineering, four or more klystrons per ring would be preferable.

Another issue arises from the fact that when one cavity is "shut off" for any reason that its power source is turned off, this does not mean the cavity is really stopped running because the beam always exists and will excite the cavity with an abnormal voltage which in turn will influence the beam. For normal conducting cavity, beam current is less than the generator current so this excited voltage may not cause serious consequence. However, in superconducting cavity, the beam current is much larger than the generator current. In normal operation, this current is compensated by fast feedback. Once the trip occurs, the klystron is shut off and so the compensating current, the cavity will be excited by the beam only. It implies the voltage will be even larger than normal which may be beyond the tolerable range. The possible consequences are arcing in cavity, outgassing or quench, or at least influence the beam due to the voltage of undesired phase.

In order to solve this problem, the possible remedy is as follows. First, one should reduce the loaded Q in such a range that the possible established voltage excited by the beam alone should not exceed the arcing threshold. Secondly, once a trip occurs, the rest cavities at normal conditions should have their drive signal adjusted such that the total voltage sensed by the beam remains in a tolerable range. The latter can hardly be performed by a simple loop, instead, it may require computer control in cooperation with the loops, and thus complicates the system.

Another concern is the consequence of the occurrence of the quench of a superconducting cavity. Analysis[3] indicates there will be a large amount of heat produced at the cavity wall due to the beam excitation, which may be beyond the manageable power of the cryogenic system and thus may force the beam to shut off. Therefore the cryo-system and cavities should be designed to minimize the probability of a quench.

## 3. FAST FEEDBACK SYSTEM

Fast feedback, sometimes termed as direct RF feedback, means all the loop is operated at microwave frequency without transducer. All the character of feedback at low frequency is applicable to microwave, especially those advantages of negative feedback. The physical structure is rather simple, as illustrated schematically on Fig.4. A few concerns are described as follows.

### 3.1 Basic principle and functions

The loop is shown schematically on Fig.4 (a). One can see that the cavity voltage is

$$V_c = Z_{eff}(AV_{in}+I_b) \tag{3-1}$$

where $Z_{eff}$ is the effective impedance, which can be expressed as:

$$Z_{eff} = \frac{Z_c}{1+ABZ_c} = \frac{Z_c}{1+G} \tag{3-2}$$

where $A$ is transmission function defined by: $A = Ig/V_{in}$ (has unit of mho), $B$ is the feedback factor where $B = V_F/V_c$, $Z_c$ is the cavity impedance, and $G$ is the open loop gain.

Note that at the diagram Fig.4(a), the feedback block B is connected at the top of the cavity rather than at bottom, because the output signal from the coupling loop for feedback is proportional to the cavity voltage, or $V_F=BV_c$.

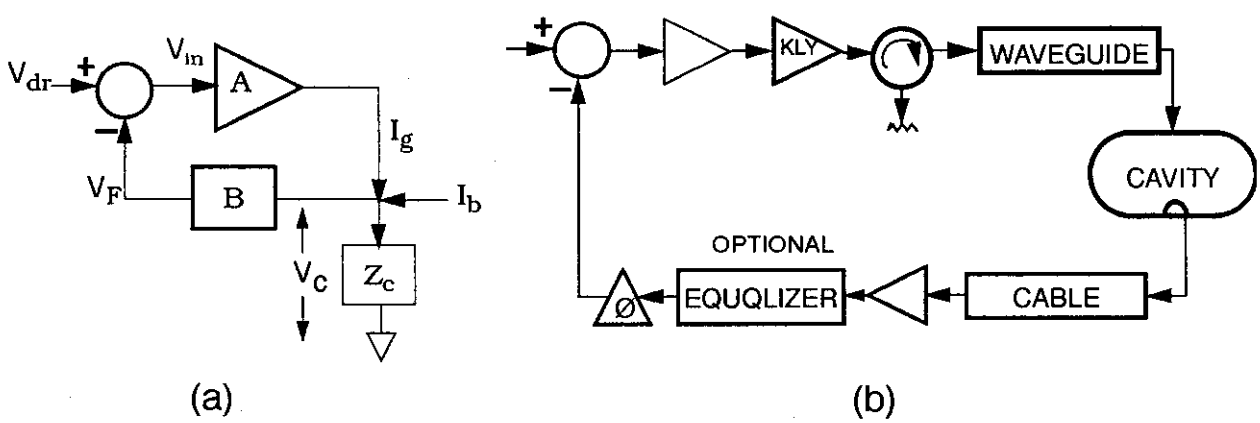


Fig.4 Fast feedback loop

When G is large enough, the effective impedance will be reduced significantly. Physically it implies that as the beam current induces a voltage in the cavity, the feedback will cause an extra current to the cavity, which has opposite phase to compensates the beam current. This is also true even if the beam contains a harmonic with frequency other than the drive signal (i.e. $V_{dr}$ with 360 MHz), because $I_b$ and $V_{dr}$ are independent variables. Of course, it is true only if the frequency is within the loop bandwidth, especially note that the klystron is a narrow band amplifier. Nevertheless, the following functions are achievable.

a) *The transient beam loading effect will be reduced*, because any change of beam current will be compensated by the induced extra current. However, one has to be careful due to the fact that this extra current will be responded after a group delay time of the feedback loop. In Collider, the delay time is of the order of 1 microsecond [4]. Therefore, when a batch of beam suddenly appears or disappears, the compensating current will occur after 1 μS or so.

However, it is not too bad in considering the batch length being about 36 μS. The compensation is still effective most of the time, except at the head and the tail. Besides, we would think that 1 μS ineffective time is not a big concern. The main concern of transient beam loading is that it causes phase shift in the cavity. The total amount of shift due to 1 μS beam loading is pretty small.

b) *The growth rate of fundamental mode driven instability can be reduced.* This issue comes when the revolution frequency is very low, and the fundamental resonant bandwidth may cover quite a few side band frequencies, that may cause coupled mode instability. The growth rate is formulated by [5]:

$$\frac{1}{\tau_n} = \frac{I_0 \eta f}{2 Q_s \beta^2 (E/e)} Re\{Z(f_+) - Z(f_-)\} = k\Delta Z \qquad (3\text{-}3)$$

where $I_0$ is the DC beam current (0.072 amp), $\eta$ is momentum compaction ($9.1\times10^{-5}$), $f$ is the frequency concerned (here is $3.6\times10^{8}\text{sec}^{-1}$), $Q_s$ is synchrotron tune ( 0.0022 for injection and 0.0012 for storage), $\beta$ is relativistic velocity ( $\beta \approx 1$), $E$ is the energy of beam (2 to 20 TeV), $e$ is the charge of proton, and $k$ is the product as can be seen from (3-3). The last term $\Delta Z$ is the difference of real impedance at frequencies $f_+$ and $f_-$ , defined as:

$$f_+ = f + nf_0 + f_s \tag{3-4a}$$

$$f_- = f - nf_0 - f_s \tag{3-4b}$$

These refer to two side band frequencies aside the cavity frequency $f$. Note the revolution frequency $f_0$ (=3.341 kHz) and synchrotron frequency $f_s$ (7.57 Hz for injection, 4.13 Hz for storage) are low enough, there involves quite a few harmonics within the cavity resonant scope if a normal conducting cavity is employed. It can be seen from above equation that if the cavity is tuned at resonance, in principle it will be stable, because $\Delta Z$ is zero due to the symmetry of the resonant curve. However, detuning is often required. One has to estimate the growth rate. Assuming $R/Q$=115, $Q = 10^4$, with cavity number N=24, it turns out that the largest $\Delta Z$ occurs at n = 5 ( 5th harmonic ), and growth rate $1/\tau_5 = 5.8\ \mathrm{sec}^{-1}$.

Obviously, the fast feedback circuit will reduce the impedance for $G$ times and thus reduce the growth rate with the same factor.

### 3.2 The restriction of group delay

The group delay is the main restriction for the application of fast feedback. This issue becomes more important because the klystron is in the gallery while the cavity is in the tunnel, of which the distance is significant. Therefore the physical length of the loop, including transmission waveguide and return cable, is pretty long, that limits the possible gain of the loop. On physical illustration, the transmission line will cause different phase delays for different frequencies. Therefore when the frequency differs enough from the center frequency, the negative feedback will turn to positive feedback, which, of course, may cause self-oscillation. Consequently, the gain of the loop has to be reduced to keep the system stable.

For quantitative analysis, one can make use of well known Nyquest's criterion. It says that the locus of the open loop gain function ( i.e. G) should not involve point (-1,0) on the complex plane. According to (3-2), assuming $K_L$ and $\Delta\phi_L$ are the factors of the open loop gain and phase delay, both of them are function of frequency, we have:

$$G = ABZ_c = K_L(f)\, e^{j\Delta\phi_L} Z_c \tag{3-5}$$

In principle, the loop includes the cavity, but for convenience here we divided it into two parts, say $AB$, the loop excluding the cavity, and $Z_c$, the cavity impedance. The latter can be expressed as:

$$Z_c = R_{sh}\cos\phi_c e^{j\phi_c} \tag{3-6}$$

where $\phi_c$ is the cavity detuned angle and $R_{sh}$ the shunt impedance at resonance. Thus:

$$G = K_L(f) R_{sh}\cos\phi_c e^{j(\Delta\phi_L + \phi_c)} \tag{3-7}$$

According to Nyquest's criterion, the amplitude of the open loop gain, should be less than 1 when the total angle $\Delta\phi_L + \phi_c$ reaches 180°. By general consensus, for an enough safety margin it should not exceed ±135°. A high $Q$ cavity can produce a maximum ±90 degree phase shift, (i.e. $\phi_{cmax} = \pm 90°$), therefore the critical phase shift due to the loop itself, $\Delta\phi_L$, when the loop gain reduced to 1, should be less than 45°, or $\pi/4$. On the other hand, $\Delta\phi_L$ can be expressed by the group delay of the loop and frequency shift, i.e.:

$$\Delta\phi_L = \tau_g \Delta\omega \tag{3-8}$$

The total group delay $\tau_g$ is contributed by the transmission line and the amplifier chain, especially klystron, of which the group delay is of the order of 350 nS. Note that the cavity is not taken into account in this group delay. Once $\tau_g$ is known, from (3-8) and (3-7) the critical frequency shift and the maximum gain are determined by:

$$\Delta\omega_{max} = \pi/(4\tau_g) \tag{3-9}$$

and

$$K_L(f) R_{sh}\cos\phi_c\big|_{\Delta\omega = \Delta\omega_{max}} \le 1 \tag{3-10}$$

Since the bandwidth of the amplifier is usually much wider than the cavity, $G_L(f)$ can be regarded as constant. Substituting $\Delta\omega_{max}$ into:

$$\cos\phi_c = [1 + ((2Q_L\Delta\omega)/\omega)^2]^{-1/2} \approx (2Q_L\Delta\omega/\omega)^{-1} \tag{3-11}$$

then equation (3-10) yields:

$$G_0 = K(f_0) R_{sh} \le \frac{2Q_L\pi}{4\omega\tau_g} = \frac{Q_L}{4f_0\tau_g} \tag{3-12}$$

This formula indicates the maximum loop gain allowed for feedback. In our case for different gallery locations, the total loop delay ranges from 800 to 1390 nS. The loop gain ranges from 4.7 to 8.2 for 5-cell normal conducting scenario, from 7.9 to 13.7 for 1-cell scenario, and from 55 to 95 for superconducting 1-cell scenario.[6]

### 3.3 The equalizer

The significance of the loop gain is that it determines the efficiency of the feedback

loop. The last paragraph indicates the loop gain is limited by the group delay. In the case that the klystron is distant from the cavity, it is of big concern. In order to reduce the group delay, development of an equalizer is ongoing at SLAC in order to compensate the group delay of the klystron.[5],[7]

Fig.5 shows schematically the basic function of an equalizer, of which the phase frequency performance is a reverse of that of the klystron. Therefore the total phase performance is less sensitive with frequency, thus reduce the total group delay time $\tau_g$ and increase the allowed loop gain.

The equalizer is often used for compensation in control loops. To synthesize the above performance one may have many alternatives. However, frequency converters are necessary in order to process the signal at lower frequency, then the loop involves non-linear components and is, in the strict sense, no longer a pure linear system.

The equalizer may be set up either at the feedback path, or before the klystron amplifier. It may compensate the group delay due to the klystron. Furthermore, com-

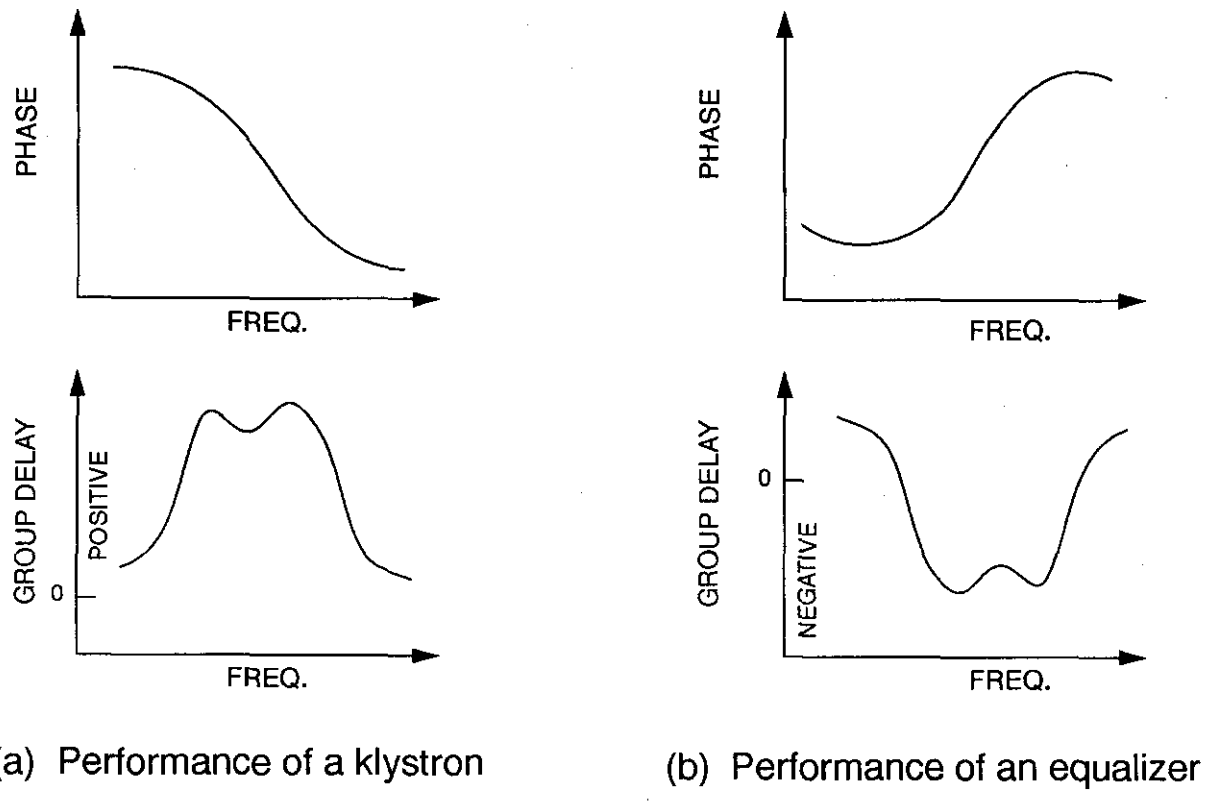


(a) Performance of a klystron

(b) Performance of an equalizer

Fig.5 The Function of Equalizer

pensation of the delay due to the transmission line is also possible.

One more point is worthy of note. In a normal linear system, the group delay is regarded as the delay of energy propagation. This does not apply in this case. The negative value of group delay, shown in Fig.5(b), is correct only in the sense that it compensates the phase deviation with frequency at the definition of:

$$\delta = \frac{d\phi}{d\omega} \tag{3-13}$$

The signal propagation time, of course, can not be negative. On the contrary, the insertion of the equalizer will inevitably cause a certain amount of extra delay. Therefore, once the batch arrives to the cavity, the compensating current can not response immediately until the feedback signal passing through the whole loop and reaches the cavity again. This delay time takes about 1 μS or so. Also this compensating current will still excite the cavity the same time after the batch departure. This phenomenon of delay, in principle, will not exist in feedforward system, described in section 4.

### 3.4 The asymmetry of the cavities

When a klystron feeds two or more cavities, which share the same feedback loop, it is of concern how much degradation will happen due to the asymmetry of the cavities as well as the feeding and coupling structures. F. Pedersen has analyzed the two cavity case.[5] It is of interest to know the behavior with more cavities since up to 16 cavities per klystron has been proposed.

Fig. 6 illustrates the scheme for analysis. From the schematic, it follows that:

$$\begin{aligned} V &= \sum_{i=1}^{n} V_{ci} \\ V_{ci} &= (I_b + I_{gi}) Z_{ci} \\ I_{gi} &= A_i (V_{dr} - V_F) \\ V_F &= \sum_{i=1}^{n} V_{Fi} \\ V_{Fi} &= B_i V_{ci} \end{aligned} \tag{3-14}$$

where V is the total cavity voltage which the beam sees. We assume beam current $I_b$ is equal for all cavities. $V_{dr}$ is input drive voltage. Since at this loop $I_b$ and $V_{dr}$ are two independent variables, the voltage can be solved as:

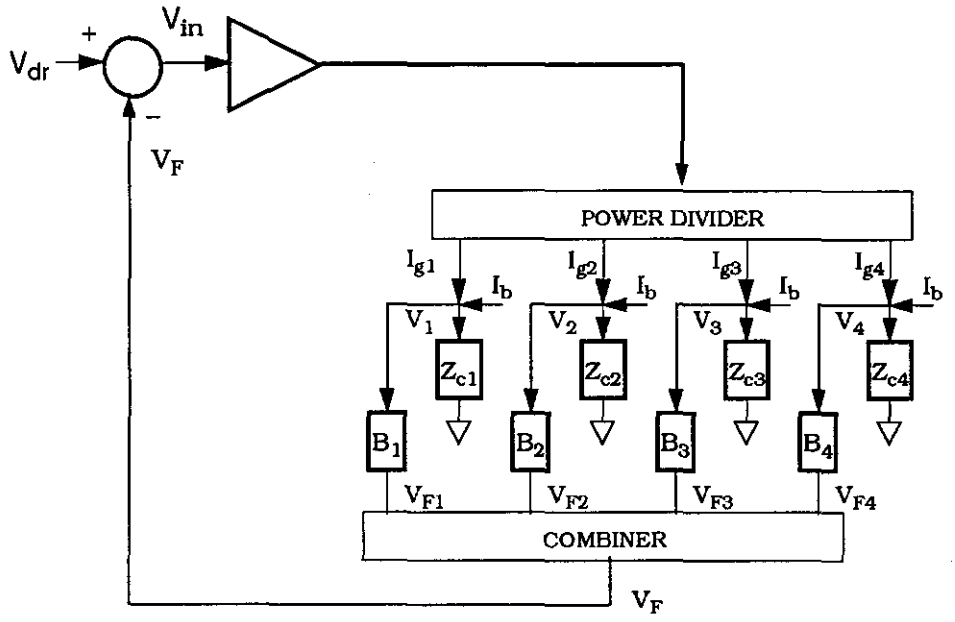


Fig.6 Feedback loop with a few cavities in parallel

$$V = Z_b I_b + KV_{dr} \tag{3-15}$$

$Z_b$ is the impedance seen by the beam and $K$ is the amplifier gain with feedback taken into account.

Assuming $V_{dr} = 0$ and solving the above linear equation set yields [8]:

$$Z_b = \frac{nZ_o(1+\Delta)}{1+ABZ_o(1+\alpha)} \tag{3-16}$$

where:

$$\Delta = ABZ_o\{\frac{1}{n}\sum_i \Delta_{ai}\Delta_{bi}(1+\Delta_{zi}) - \frac{1}{n^2}\sum_i \Delta_{ai}\Delta_{zi}\cdot\sum_j \Delta_{bj}\Delta_{zj}\} \tag{3-17}$$

$$\alpha = \frac{1}{n}\sum_i (\Delta a_i\Delta b_i + \Delta a_i\Delta z_i + \Delta b_i\Delta z_i + \Delta a_i\Delta b_i\Delta z_i) \tag{3-18}$$

$\Delta$s denote the relative errors, that

$$\begin{aligned} Z_i &= Z_o\,(1+\Delta_{zi}), & \Sigma\Delta_{zi} &= 0 \\ A_i &= A_o\,(1+\Delta_{ai}), & \Sigma\Delta_{ai} &= 0 \\ B_i &= B_o\,(1+\Delta_{bi}), & \Sigma\Delta_{bi} &= 0 \end{aligned} \tag{3-19}$$

and $A = A_o$

$$B = nB_0 = \Sigma B_i \tag{3-20}$$

For the symmetric case, $\Delta = \alpha = 0$, equation (3-16) reduces to:

$$Z_b = \frac{nZ_o}{1 + ABZ_o} = \frac{Z_{ct}}{1 + G} \tag{3-21}$$

This is the same as (3-2) for single cavity except here the $Z_{ct}$ is total cavity impedance. For less than perfect symmetry, equation (3-16) applies, and both the numerator and the denominator contain correction terms. Since normally $\alpha \ll 1$, it is ignorable, while $\Delta$ contains a large factor $ABZ_0 = G$, and may cause significant affection to the feedback system.

If we set the criteria that the correction factor is less than 20%, which corresponds to a phase deviation less than ±11°, and the magnitude deviation less than ±20%, then the criterion can be given as:

$$|\Delta| \approx \left| ABZ_o \frac{1}{n} \sum_{i=1}^{n} \Delta_{ai} \Delta_{bi} \right| < 0.2 \tag{3-22}$$

or

$$|\Delta_{am} \Delta_{bm}| < \frac{0.2}{|G|} = \frac{0.2}{|ABZ_o|} \tag{3-23}$$

where $\Delta_{am}$, $\Delta_{bm}$ are the maximum errors. Evidently the criterion (22) is conservative.

The above equations show that the maximum error limit required does not depend on the number $n$. On the contrary, from statistics, the larger the $n$, the smaller the $\Delta$, providing (3-23) is satisfied. Besides, we found that the asymmetry of the cavities is less important than that of the couplings or the power dividers as the error term $\Delta_{zi}$ is not entered in equation (3-22). As shown in (3-17), it enters only in 3rd and 4th order minor terms and thus is ignored.

Nevertheless, it should not be concluded that one may pay less attention to the symmetrization for multi-cavity operation. This usually requires multi-stages of power divider and their errors are cumulated, so that to realize the criterion (3-23) needs more cautiousness, though the criterion itself is to some extent conservative.

For the two cavity case it reduces to the same result obtained by Pedersen[5].

## 4. FEEDFORWARD AND SLOW LOOP SYSTEM

The term "feedforward" is sometimes confused with feedback if the loop is not so obvious. Fig.7 shows two loops to which the klystron amplifier chain serves as a common part, while backward signal splits into two branches to play different roles. One is termed "feedforward branch", of which the job is to compensate the beam loading. This loop has a one turn delay, i.e. a revolution period or 290 μS.

The other branch we term "slow loop" branch in order not to be confused with normal feedback loop, though in general sense it is. Its job is to damp the synchrotron oscillation due to either injection error or the fundamental mode instability. In order to get enough information about the synchrotron oscillation, it is necessary to deal with the signal in a whole circle. This is a pretty slow process, because it should take many revolution turns. The huge size of collider ring makes this circle unusually long, say 132 to 242 mS, corresponding to synchrotron frequency of 7.57 to 4.13 Hz respectively. Therefore, the possibility to speed up the signal process is of concern.

A brief description about the three jobs follows.

### 4.1 Compensation of beam loading

In principle, a feedforward system can completely compensate the beam loading, providing all the error can be perfectly controlled. Fig.7 shows schematically the com-

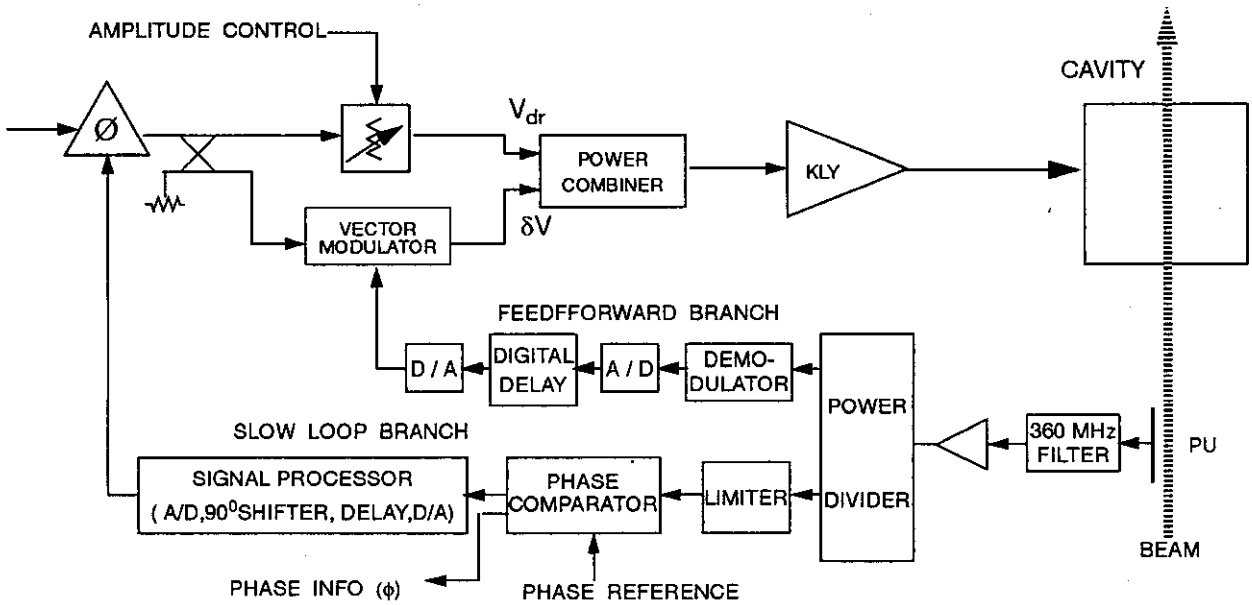


Fig.7 Feedforward and slow loop

pensation process. The beam monitor picks up the information of both amplitude and phase. After one turn delay, ( strictly speaking, it should subtract the group delay time of the amplifier chain until cavity and the time difference between cavity and pick-up), the signal acts to the vector modulator, so that a reverse current will be on the cavity at the same time when the beam comes.

Unlike the RF feedback loop mentioned before, there is no restriction by the long transmission line. In principle it can compensate the beam loading immediately and completely. Although, there is no response at first turn, it is not likely important. In case it is of real concern (e.g. the beam current is too large) this may be remedied by HEB injection forecast, that the forecasted signal acts on the vector modulator to execute compensation just as the beam is injected.

The advantage of feedback loop is that the compensation is always self adjusting, and the parameters of the feedback network are not necessarily very precise, except to control the phase to avoid positive feedback. While for feedforward system, all the parameters should be carefully calibrated and controlled. Any error or fluctuation may result in imperfect compensation.

Although the principle can be applied to bunch by bunch compensation, it is not realistic due to the narrow bandwidth of the system. Therefore the transient beam loading would be compensated on a slow process, for example batch by batch basis. The slow variation within a batch can also be compensated. In fact, since a batch lasts 34 μS, it should be no problem to detect the variation.

In order to compensate completely, one has to take both magnitude and phase information, which may be detected by a demodulator, and then exert on the vector modulator after one turn delay. For the collider ring, the beam current $I_B$ is almost $90^0$ in advance of the cavity voltage as shown in Fig.8. If the cavity is not detuned, (i.e. $I_g$ and $V_c$ are in phase), the compensating current $\delta I$ should be $90^0$ behind $I_g$, or $\delta V$ is $90^0$ behind $V_{dr}$ correspondingly ($V_{dr}$ is always in phase with $I_g$). This can be easily done by virtue of a $90^0$ hybrid as shown in Fig.7. In this case, the vector modulator functions just as a amplitude modulator or a variable attenuator with no phase modulation needed. The amplitude $\delta I$ is modulated in pace with the beam current. Specifically, $\delta I$ will vanish during the beam gap.

However, in the case of a detuned cavity, Fig.8(b), $\delta V$ should not be exactly $90^0$ behind $V_{dr}$, and thus the phase information should be embedded on the compensation signal.

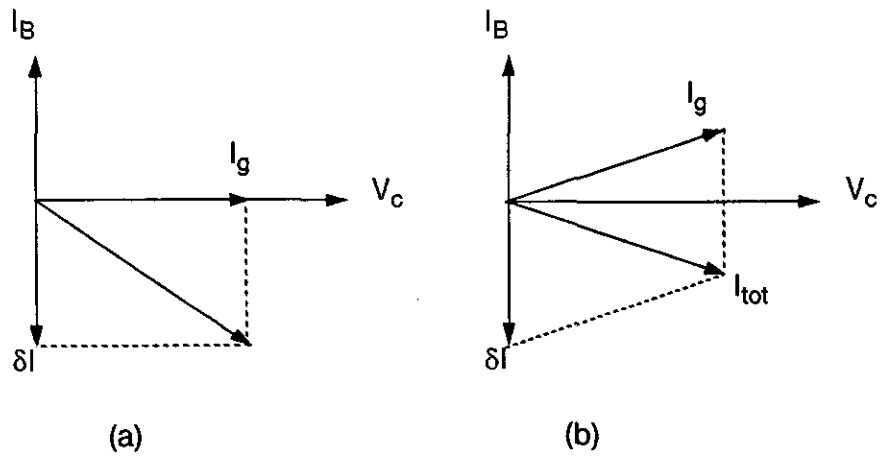


Fig.8 The current vector diagram

As to the circuit, the delay line can be either analogue, like SAW (surface acoustical wave) device, or digital. The latter is certainly better and preferable for its flexibility. The analogue is rather difficult for such a long time delay as 290 μS. The vector modulator also has different approaches. The detail will not be discussed here.

**4.2 Damping of the injection error**[9],[10]

Injection error means that the bunch injected to collider from HEB is not exactly at the center of the bucket. This is a longitudinal error and will cause synchrotron oscillation. The transverse injection error means the bunch is off axis and will cause betatron oscillation. It is another issue and won't discuss here.

The synchrotron oscillation can be damped by the slow loop as shown in Fig.7. It is well known, if the oscillation is acted by an external force with same frequency but a 90 degree phase difference, it will be damped as in the following equation.

$$\frac{d^2\phi}{dt^2} + \omega_s^2\phi = -\alpha\frac{d\phi}{dt} \qquad (4\text{-}1)$$

A damping scheme is illustrated on Fig.9. (It will be explained shortly.) The phase $\phi$ can be detected by beam monitor. Note that the deviation $\Delta\phi = \phi - \phi_s$ has only a constant difference with $\phi$. Be reminded this is not the phase $\psi$ measured at synchrotron oscillation period, the latter is much complex to be detected. For clarification, the solution of the above equation is:

$$\Delta\phi = \phi_m \sin(\psi - \omega_s t)\, e^{-\alpha/2} - \phi_s \qquad (4\text{-}2)$$

which is also illustrated in Fig.9(c). Without damping, $\alpha = 0$. What the beam monitor can detect is $\phi$, while the remaining parameters $\phi_m$, $\omega_s$ and $\psi$ are unknown unless one traces a whole synchrotron oscillation circle, which is 0.13 to 0.24 second, as the synchrotron frequency is as low as 7.57 to 4.13 Hz. This is a long time, however, we need to know the phase $\psi$ right at that moment and then make a 90 degree shift.

To realize the phase detection and the shift one has to employ DSP (digital signal processor) and FIR (finite-length impulse response) filter. This issue has to be studied further.

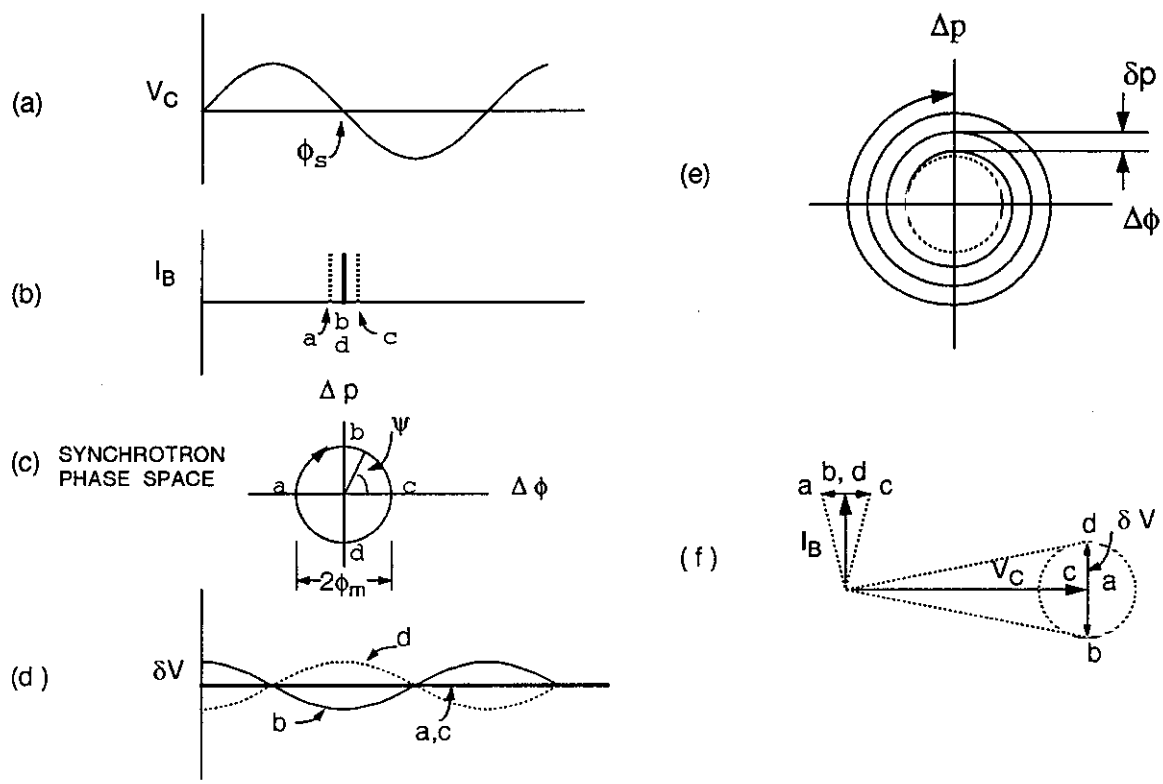


Fig.9 The illustration of instability and damping

(a) The wave form of Vc, (b) The phase of an individual bunch,
(c) The same bunch at synchrotron phase space,
(d) The damping waveform at different phase stage,
(e) The trace at phase space of an instability without damping,
(f) The damping voltage at the vector diagram.

### 4.3 Damping of low order CBI (Coupled Bunch Instability)

To begin with, let's illustrate the physical phenomenon of the considered instability and define the term "low order".

There are $17424 \times 6$ buckets along the collider ring. The designed occupancy rate is one for six buckets, or the bunch number is 17424. (Though there are only 15840 bunches due to gaps between batches, it doesn't matter for general analysis.) There are 17424 multi-bunch coupled dipole modes, even more if one takes into account quadrupole and higher modes. The latter are less important in the Collider by general consensus. For dipole mode one can regard the bunch as a solid and ignore its internal motion.

For an ideal beam, if all 17424 bunches are filled and located right at the synchrotron phase, then its frequency spectrum consists of only 60 MHz and its harmonics, especially 360 MHz, which interacts with the cavity. When gaps exist, or the bunches are not uniform, the spectrum will consist all harmonics of the revolution frequency. For dipole modes, the bunch behaves as a solid but its position may deviate from their ideal phase.

Fig.9 illustrates the dipole mode instability. Fig.9 (a) shows the cavity voltage waveform without damping voltage added. Fig.9 (b) shows the phase of a bunch, of which its mass center is at $\phi_s$ (synchrotron phase) in stable condition. When the mass center deviates from $\phi_s$, a synchrotron oscillation occurs, the bunch swings about $\phi_s$, as denoted by the dotted line in Fig.9 (b). Its trace is illustrated on the phase space at Fig.9 (c). The letters a, b, c, d show different states. When instability occurs, its phase trace looks like Fig.9 (e). Obviously, $\Delta\phi$ gets bigger and bigger, and once it goes outside the bucket, particles are lost. The damping voltage $\delta V$ should be in quadrature with the $\Delta\phi$ and its waveform is shown in Fig.9 (d) with different bunch states. Note that since the synchrotron frequency is only a few hertz, in comparison with the rf frequency, 360 MHz, the states a, b, c, d, can be regarded as quasi-static ones. Each of these states should, as shown in Fig.9(d), correspond to a damping voltage wave with different phase related to the original voltage shown in Fig.9(a). Fig9 (f) shows the corresponding vector diagram. The vector of the harmonic gradient of the bunch current swings about the vertical vector. Correspondingly, the damping voltage $\delta V$ is added to $V_c$ so that the locus of the total cavity voltage should be a circle, the dotted circle shown in Fig.9(f), of which the magnitude is exaggerated. Since the amplitude modulation of the cavity voltage is not important in this case, one may employ only a phase modulation, which can

be easily performed by a phase modulator inserted in the amplifier chain as shown in Fig.7.

In the above situation, the beam has phase modulation, and its spectrum spreads with spectral lines at the following frequencies:

$$f_{p,n} = (n + pM) f_0 + f_s \tag{4-3}$$

where $f_0$ is the revolution frequency, $f_s$ is synchrotron frequency, M is the number of bunch, i.e. 17424, and $n$ denotes the mode number with $0 \le n < 17424$, while $p$ is an integer with $-\infty < p < +\infty$. The frequency near the fundamental is $p = \pm 6$ in the collider case, or $f_{rf} = 6\,Mf_0$, then we have:

$$f_n = f_{rf} \pm n f_0 \pm f_s \tag{4-4}$$

"Low order" simply means $n$ is low enough that $f_n$ is within the bandwidth of the fundamental mode of the cavity, so that its impedance is high enough to drive an instability. Meanwhile it must be also within the bandwidth of the klystron, of which the bandwidth is narrow in common sense but still wider than the cavity. Therefore one can make use of the klystron as power source to damp this instability, similar as we did for the injection error mentioned above.

Although injection error and CBI are quite different issues, the remedy to cure them is much the same. Because both need signal pick-up, filter, phase detector, signal processor including a 90 degree phase shifter, and finally modulating the drive signal to perform a damping force. The slow loop branch shown in Fig.7 does these jobs. Nevertheless, there are some difference as listed below.

First, for injection, phase errors of different batches are incoherent. For low order mode coupled bunch instability, on the other hand, they are coherent. This can be seen from Fig.10 (a) and (b). (Fig.10(c) related to high order CBI will be discussed in next section.) The dots symbolize discrete bunches rather than continuous beam. The offset from the axis indicates the phase error. It is also the output signal as a time function of a fixed monitor, which detects the longitudinal position deviation. Fig.10 (a) shows the situation of the injection error, which is assumed constant within a batch, though it may not be exactly true. Because the time gap between two injections is about 9 minutes, there should be enough time to damp the preceding batch before the next injection. Therefore in the figure only one batch has phase error, the rest are assumed right at synchrotron phase $\phi_s$. Those batches, like number 5 and 7 in Fig.10(a), having not been filled are left blank. On the other hand, Fig.10 (b) shows the coherence in the low order CBI. Note that the curve is like a "snapshot", i.e. the phase errors of all bunches

at the same moment. The figure shows a sinelike pattern. Since each bunch is slowly oscillating with synchrotron frequency 7.57 to 4.13 Hz, this pattern will change very little in the next turn.

Secondly, uncorrected injection errors will lead to emittance growth after a few synchrotron periods. CBI's can grow in amplitude to the point of causing the more serious problem of beam loss. Therefore, its damping rate must be greater than the growth rate, otherwise the magnitude may grow without limit. For injection errors there is no such threshold, although critical damping is preferable.

For engineering design, it is instructive to distinguish and quantitate those parameters concerning phases and frequencies. There are three different frequencies and related phases which should not be confused.

First, the phase error $\Delta\phi$ detected from the beam monitor is the phase deviation about synchrotron phase which is measured with respect to the rf frequency, i.e.

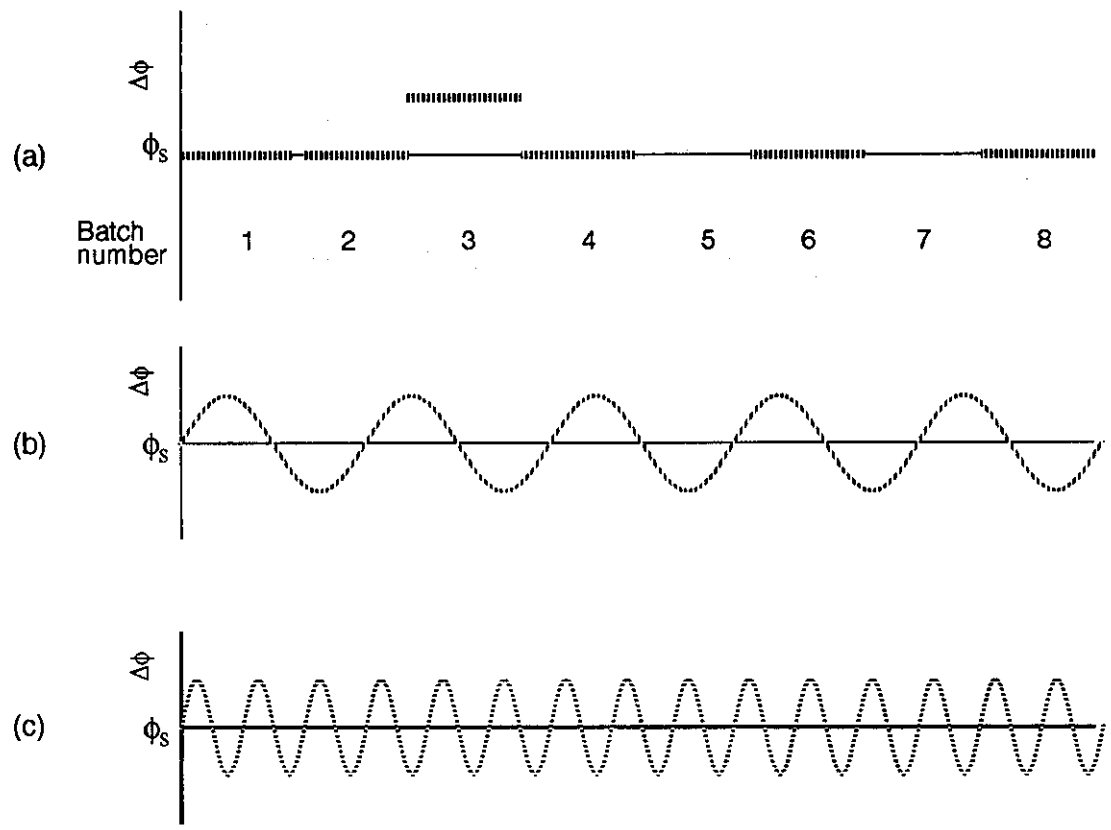


Fig.10. The phase error signal detected by beam monitor,
(a) Injection error, (b) Low order CBI, (c) High order CBI

360 MHz. The local frequency applied to the phase detector may be different from 360 MHz, as sometimes higher frequency is preferable in order to rise the phase sensitivity. The output of the detector is the phase $\Delta\phi$ in equation (4-2), which should always be measured at 360 MHz. Normally, its reasonable range may be $\approx \pm 15$ degrees.

Second, the amplitude of this detected signal, (as shown in Fig.10(b)), varies in a rate of the order of a few times the revolution frequency. The curves shown in Fig.10 are in a revolution circle, say 291 μS. Fig.10 (a) shows eight batches, each involves 2057 bunches and lasts about 33 μS. Fig.10 (b) shows a low order mode with $n = 5$. This corresponds to a frequency of 5 x 3.44 kHz. The waveform shown is a uniform sine wave. It may not be so regular if the instability involves more than one mode simultaneously. Anyhow, this frequency range is comparable with the bandwidth of the cavity. Also, it is associated with the speed requirement for the digital signal processor. We may deal with them by either averaging or distributing them to different memories. More about the signal process will be discussed later.

The third frequency concerns the synchrotron oscillation. This is a very low frequency ($f_s$ = 7.57 to 4.13 Hz). In order to perform damping, one has to know $\psi$ and $\phi_m$, and then make a $90^0$ phase shift. This is followed by a proper scale to produce a voltage, which modulates the bias of the phase shifter, which modulates the output phase of the klystron. This is equivalent to adding a quadrature voltage on the original voltage as shown in Fig.9 (f).

In order to get the information of phase $\psi$ and amplitude $\phi_m$, one has to trace an individual bunch a whole synchrotron oscillation circle, i.e. 0.13 to 0.25 second. That involves 450 to 830 revolution turns. If one samples the $\phi$ of an individual bunch once each revolution period, then there are 450 to 830 data points. Moreover, we have 17424 bunches. If one wants to make damping on bunch by bunch basis, This implies 450 times 17424 data points. For a batch by batch basis, one has to deal with 450 times 8 data points. How to deal with those data is an issue of signal processing. To simplify it, a downsampling technique may be possible. This technique is currently being developing in SLAC.[11] It seems also necessary in the Collider, especially for damping high order modes. This will be described in the next section.

## 5. ACTIVE DAMPING SYSTEM

In the last section we've discussed low order mode damping by virtue of the main accelerator's klystron. It is active damping. However it can not damp high order modes, to which the damper needs a wide bandwidth. So there requires another active damping system which is almost independent with the accelerator system. This system is discussed below.

### 5.1 High order mode

One of the most serious concerns of the collider RF is that of the high order mode coupled bunch instabilities. The reasons are as follows.

The collider has 17424 bunches in a ring. There are 17424 modes, denoted by number $n$ ( see equations (4-3), (4-4)). We'll limit our discussion on longitudinal dipole modes. If quadrupole and higher modes are also taken into account, there will be even more. Fortunately the latter are less important, and will be ignored in this discussion. Nevertheless, to take care of thousands modes is by any means a big issue.

The above mentioned modes are the modes associated with the beam. On the other hand, a cavity may have also a lot of high order modes. Any high order mode of the cavity will cover some of these beam modes. Resonance may occur and cause trouble of instability.

To avoid these kind of instabilities known as CBI (coupled bunch instability), there are two approaches. One is to depress the high order modes in the cavity. That is passive damping. Another is to kick the bunch back to its desired phase, whenever the phase is out of order as an instability occurs. That is known as active damping. In the case of our collider, both passive and active damping are necessary, but only active damping is discussed hereafter.

Fig.10 (c) shows the phase deviation of the bunches along with the revolution circle. This figure refers to $n = 15$. As mentioned above the maximum $n$ can be 17423. This figure gives an idea of how the phase error $\Delta\phi$ of an individual bunch is related to the adjacent bunches. Its waveform may also be other than a sine wave if two or more modes exist simultaneously. The higher the mode, the larger the $\Delta\phi$ change between bunch to bunch. This phase variation is related to the speed requirement of the signal processor as mentioned before, as well as the bandwidth of the kicker.

In order to figure out how much bandwidth is required, let's check Fig.10 (c) again. Each bunch passing through the "pick up" will induce a pulse signal on it, or a ringing signal depending on the pick-up structure[1]. This signal should decay adequately before the next bunch comes in order not to be mixed up with the subsequent signal induced by the next bunch. Those signals will be uniformly spaced if the bunches are uniform. However, when an instability occurs, the phases of those signals differ from bunch to bunch as shown in Fig.10(c). Its waveform implies a phase modulation. There are $n$ wavelengths along the whole ring. Therefore the phase difference of adjacent bunch is $\Delta\psi = (n/M) \times 2\pi$. Here M=17424.

As far as the bandwidth is concerned, since we hope to kick all possible modes, attention is paid to the mode, of which $\Delta\phi$ changes most rapidly. It is the mode of which $\Delta\phi$ changes its sign every adjacent bunch, that is $\Delta\psi = \pi$, or $n = M/2$. Let's denote it $\pi$-mode. Since the bunch spacing is 5 meters, or 16.7 nSec, the phase changes $\pi$ in 16.7 nSec implies a frequency of 30 MHz. The rest of the modes have less speedy modulation. Especially those very low modes, of which the bandwidth required is less than that of the klystron amplifier and thus can be handled easier as mentioned at proceeding paragraph.

Note that this $\pi$-mode is not the "highest" mode. $\pi$-mode corresponds to $n = M/2$, and $\Delta\psi = \pi$. When $n > M/2$, then $\Delta\psi > \pi$, but it is equivalent to $\Delta\psi - 2\pi$, of which the absolute value is less than $\pi$. (e.g. $\Delta\psi = 150^\circ$ is equivalent to $\Delta\psi = -30^\circ$.) Therefore $\pi$-mode associates the maximum bandwidth.

The maximum bandwidth required is 30 MHz. This means both the kicker and the power sources have to cover this bandwidth.

In brief, the large number of bunches introduces a variety of possible modes, the narrow space between bunches introduces wide bandwidth requirement. Those are big concerns about the active damping of high order mode CBI.

### 5.2 The scheme of the active damper

In general consideration there are two approaches to damp the CBI. One is in the frequency domain, and another is in the time domain.

In frequency domain, one has to analyze the spectrum of the beam signal picked up

1. See later "Signal pick up subsystem" in paragraph 5.3,

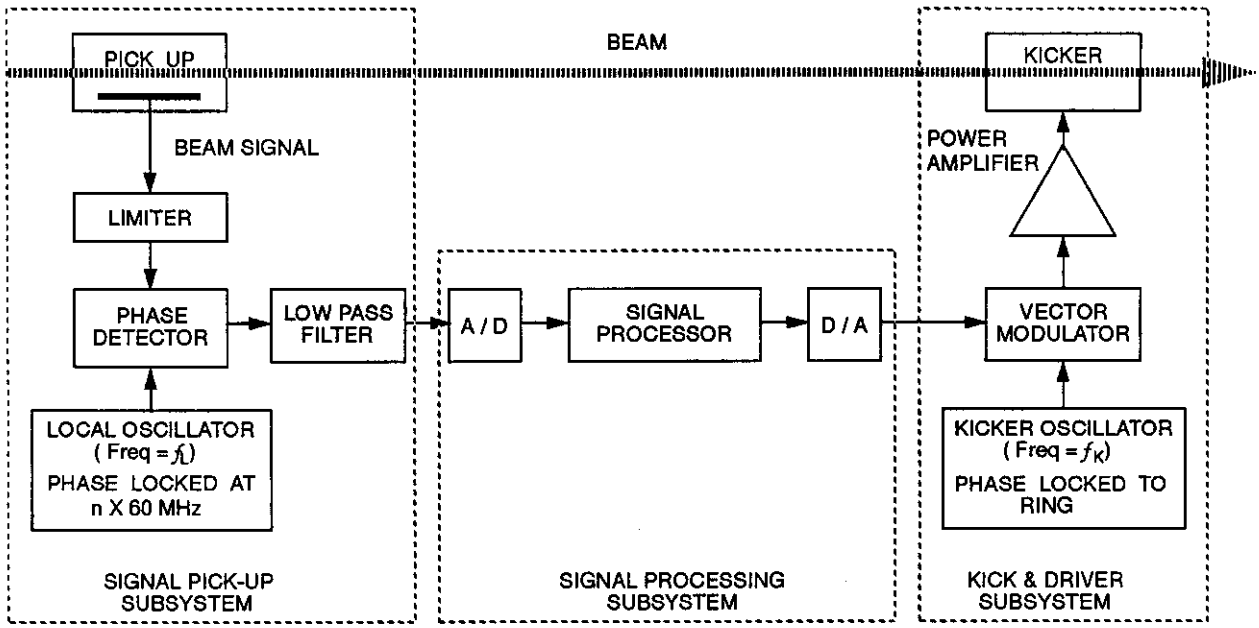


Fig.11 The scheme of active damping system

by the monitor and then make necessary processing to synthesize the correction signal and drive the kicker. The philosophy of this approach is to deal with the total bunches as a whole system and disregard the individual bunch. The possible advantage is that it can be applied in general case no matter how many bunches exist.

In time domain, one views the beam on a bunch by bunch basis. From the beam monitor one picks up the phase deviation information of all individual bunches. Signal processing is used to form a series of correcting signals to drive the kicker, which in turn kick the bunches one by one. The philosophy of this approach disregards what modes are in the beam, but damp it whenever a bunch is out of order.

A scheme on the basis of time domain approach is illustrated on Fig.11. Three subsystems are divided. The function of each part is very similar with the slow loop in Fig.7, but the hardwares are quite different. Following are some major concerns.

### 5.3 The concerns about the active damper

The following represent some concerns which are necessary to be clarified before the engineering design.

#### 5.3.1. Power requirement

The minimum voltage required to drive the kicker is that the damping rate equals to the growth rate of the most unstable mode. It can be expressed as[12],[13]

$$V_k = 2\frac{\Delta\omega_s}{\omega_s}V_{RF}\cos\phi_s\delta\phi \tag{5-1}$$

where $\Delta\omega_s = 1/\tau$ refers to the growth rate of most unstable mode, and $\delta\phi$ is the detectable beam phase error. In order to provide enough safe margin, one usually chooses three to five times of above value. Above factors depend on what kind of cavity is chosen and the sensitivity of the pick up system. An estimate for the scenario of normal conducting cavities in the 34 kV range.[12]

The power required is:

$$P_k = \frac{1}{2}\frac{V_k^2}{Z_k} \tag{5-2}$$

where $Z_k$ is the impedance of the kicker. Obviously, high impedance is preferable. Assuming $Z_k = 2$ kΩ, at above estimated voltage the power required is 290 kW. This is a big problem. To reduce this large power requirement, one must employ better passive damper for the cavity to reduce the HOM impedances and reduce the required active damping voltage.

For the scenario of a superconducting cavity, the problem is much alleviated because the high order modes can be more easily reduced.

### 5.3.2. The power source

As the power and the bandwidth are both pretty high, it is a big challenge for the power source. From the point of view of high power, the electron tube is better. While concerning bandwidth, a solid state device is preferable. For present technology, both approaches have difficulties satisfying our requirements.

As to solid state amplifier, 30 MHz is not a problem. MPD (Microwave Power Device Inc.) can provide 10 kW CW assembly at an expense about $100 per watt. Higher power will be difficult.

As to electron tubes, both klystron and klystrode have problems meeting the 30 MHz requirement, if it is not impossible. A twt (travelling wave tube) in principle can meet this requirement, but nowadays few companies are interested in developing this

device.

Therefore effort must be on limiting the power requirement no more than 10 kW or so. In order to do so one must increase kicker impedance as high as possible, and raise the sensitivity of the phase error detection. Of course, passive damping to reduce the mode growth rate to a reasonable low level, is also very important.

From this point of view, the scenario of superconducting cavity which requires less power is also preferable.

### 5.3.3. Selection of the kicker frequency

As a bandwidth of 30 MHz is determined, the higher the center frequency the better, because less relative bandwidth will ease both kicker structure and the power source. However, the upper limit is restricted by the bunch length, which must be much less than the wavelength. The bunch length is about 12 cm, by general consensus the highest acceptable frequency is 800 MHz.

One more concern is that the kicker should not cover harmonics of the fundamental beam frequency, i.e. $n \times 60$ MHz. Otherwise the kicker will be excited by the beam and causes interference.

Another consideration is the band should cover all possible modes. This restricts the selection of the center frequency of the active damper. The 0-mode (i.e. $n = 0$) is always associated with the frequencies which are the harmonic of 60 MHz, while the $\pi$-mode with those just in between. Therefore the possible candidates of the center frequencies are: 555, 585, 615, 645, 675, 705, 735, 765, 795 MHz. Let's assume 765 MHz for the time being.

### 5.3.4. The structure of the kicker

In principle, a pick-up structure can also be used as a kicker. There are many possible structures for longitudinal kicker, like stripline kicker, series-drift tube kicker[14],[15], etc. In our case, as the impedance is of major concern, a cavity structure would have advantage and is worthy of attention.

As is well known, for a given structure the impedance and bandwidth product is proximately a constant. For a cavity the impedance-bandwidth product is:

$$R\Delta f = (\frac{R}{Q}) Q_L \Delta f = (\frac{R}{Q}) f_0 \approx const \tag{5-3}$$

It is clear that increase of bandwidth will reduce the impedance. Assuming $f_0$ = 765 MHz, R/Q = 150, $\Delta f$ ( 3dB bandwidth) = 60 MHz, or 1dB bandwidth = 30 MHz, then the impedance R = 1.9 kΩ. This gives an evaluation of the impedance of a cavity structure kicker. That of a stripline structure is much lower.

For stripline structure, One may apply multi-section in series to increase impedance but meanwhile reduce the bandwidth, and complicate the structure.

Another approach is to employ a few kickers. It increases the impedance but meanwhile increases the space requirement in the tunnel and the complexity of the power distribution.

One may also employ a broadband impedance transformer to replace the simple coupler of the cavity, as is done in broadband klystrons. This can increase R$\Delta$f product 2 to 3 times.

It is also possible to employ a traveling wave structure, similar as used in the twt (traveling wave tube). This in principle can reach high R$\Delta$f product, but this issue may need a large amount of R & D work.

Hence, the kicker structure is an important concern and has to be studied further.

### 5.3.5. Signal pick up subsystem

The job of the signal pick-up subsystem is to provide the phase information $\Delta\phi$ of all individual bunches.

First, we are concerned about the frequency choice. In priciple, one can choose any harmonic of 60 MHz, which is determined by the bunch spacing. The upper limit is also restricted by the bunch length.

From equation (5-1), it is clear that the more sensitive the detectable phase, the less the required damping voltage. $\Delta\phi$ is measured by the time deviation from the reference synchronous bunch.

$$\Delta\phi = \omega_{rf}\Delta\tau \tag{5-4}$$

Since the bunches are very short in comparison with the rf wavelength, the pick up is not necessarily operated at rf frequency (i.e. 360 MHz). In fact, a higher frequency is

preferable. For example, a $\Delta\tau$ corresponding to $\Delta\phi = 2^o$ at frequency 360 MHz is equivalent to $\Delta\phi = 6^o$ at frequency 1080 MHz (= $3 \times 360$MHz). Therefore, if a phase detector worked at 1080 MHz can tell the phase difference of 1 degree, it is equivalent to the phase difference of 1/3 degree at 360 MHz. That means the phase sensitivity has been enhanced by 3 times. Referring to Fig.11, if 1080 MHz is chosen, the local oscillator as well as all the subsystem are working in this frequency, except the "low pass filter", which allows only the demodulated signal passing through.

The structure of the pick up is also of concern. If the pick up is composed of only one electrode, it produces one pulse each bunch passing through it. However, a phase comparator usually requires a sine signal or a train of pulses. A pulse passing through a resonant circuit can produce a ringing signal, but resonant circuit has memory that if the decay is too long, information from the next bunch will be mixed in. SLAC B-factory developed a comb generator, which is composed of a train of coupling elements periodically spaced.[16] The signals induced by those elements are combined to the common outlet so as to form a train of pulses without memory.

The multi-elements structure referred to a comb generator is especially useful in the case that the bunches are close but need to be distinguished, and a fast response to the signal is necessary.

Since in the Collider the bunch spacing is only 16.7 ns, the comb generator is worthy of attention.

### 5.3.6. The mechanism of kick and digital signal processor

For low order mode damping, the klystron is used as the power source. Both voltage and current are at 360 MHz, so the vector diagram is applicable. This is not the case for high order mode damping. The kicker works at a frequency other than 360 MHz, how to control its phase and amplitude is of important concern.

The beam contains harmonics of $n \times 60$ MHz and other frequencies when the beam is nonuniform. The output signal from the pick-up subsystem is only the information of the phase deviation from uniformity. However, our purpose is to deal with them in a bunch by bunch basis, so we have to identify each bunch and process the information individually. Since there are 17 thousands bunches, a farm of DSPs (digital signal processors) has to be employed. Should we use 17 thousands DSPs? It is ridiculous. But how many is enough? This is a matter of how to organize the signal and compromise

between the possible processing speed, reliability and the number of DSPs.

Be reminded that the signal processor will have to have the function of a $90^0$ phase shift, the same as discussed in section 4.

How to specify the requirements for the signal processor is another important issue.

How to deal with the tremendous data introduces another issue termed down-sampling, which will discuss next.

### 5.3.7. Down-sampling [11]

Imagine there are 17 thousands bunches, one picks up the phase information every bunch each turn and cumulates the data for a synchrotron oscillation circle, say about 450 to 830 turns. One then analyzes the data to figure out the synchrotron phase $\psi$ individually, followed by a transfer network to perform a $90^0$ shift and synthesizes the necessary damping vector. This information is used to modulate the vector modulator and then drive the kicker with proper amplitude and phase.

Should we need 17 thousands circuit branches to deal with each bunch individually? Should we sample all the signal every turn? Can we simplify the architecture and sample less signal to do the same job? This is the issue of down sampling.

To do so let's review some concepts. All the bunches have the same synchrotron oscillation frequency except for minor perturbations. In principle, a pure sine wave can be completely determined by as few as two samples per circle (sampling theorem). This suggests the potential that we can use much less sampled signal to do the required job.

Another character of the collider is that the synchrotron oscillation is pretty slow, 0.13 to 0.24 second. The real time treatment should not be a problem.

Those questions and considerations need further study.

**ACKNOWLEDGEMENTS**

The author would like to thank many colleagues for their beneficial discussions. Among them are Jimmy Rogers, George Schaffer, Qing X Wang, Jerry Wallace, Skip Marsden and Wayne Cornelius. Particularly, the author is greatly indebted to Dale Coleman, who reviewed the whole manuscript and gave valuable comments.

## REFERENCES


[1] H.J.Shih, J. Ellison, B. Newberger, R. Cogburm, "Longitudinal beam dynamics with RF noise", SSCL-578, July, 1992.

[2] W. Chou, "Concerns about the collider RF cavity", representation Jan.25, 1993

[3] Y.Zhao, "The concern about the heat remove requirement of the superconducting cavity ", SSCL internal memo, Aug. 1993

[4] D. Colemn, "Klystron Gallery Location", representation, Jan.27 1993

[5] F. Pedersen, "RF Cavity feedback", SLAC,1992

[6] D. Coleman, "Feedback and klystron gallery location consideration", Feb.1993

[7] P. Corredoura, "Klystron equalizer for RF feedback", International Workshop on B-factory, KEK, Japan 1992.

[8] Y. Zhao, "The analysis of the symmetry tolerance in the case that n cavity fed by a single klystron", SSCL-N-824, Jun. 1993.

[9] A. Gamp, "Servo control of RF cavities under bean loading", DESY HERA-91-09, May,1991.

[10] D. Boussard, "Design of a ring RF system", CERN SL/91-2(RFS), Jan.1991

[11] H. Hindi, "Down-sampling", SLAC B-factory conference, Apr.1992

[12] X. Wang, D. Coleman, G. Shaffer, "A comparison of conceptual RF system designs for the SSC collider", Dec. 1992

[13] "Design study of the Large Hadron Collider (LHC)", CERN 91-03, May 1991, p.112

[14] G. Lambertson, "Bunch-motion feedback for B-factory", SLAC B-factory conference, Apr.1992

[15] J. Byrd, "Multibunch feedback kicker", SLAC B-factory conference, Apr.1992

[16] J. Fox, "Feedback implementation option and issues for B factory accelerators", SLAC B-factory Conference, April,1992.