SSCL-N-824

The Analysis of the Symmetry Tolerance in the Case of *n* Cavities Fed by a Single Klystron

Y. Zhao

Superconducting Super Collider Laboratory*
2550 Beckleymeade Ave.
Dallas, TX 75237

June 1993

*Operated by the Universities Research Association, Inc., for the U.S. Department of Energy under Contract No. DE-AC35-89ER40486.

THE ANALYSIS OF THE SYSMMETRY TOLERANCE
IN THE CASE OF
n-CAVITIES FED BY A SINGLE KLYSTRON

Yongxiang Zhao

This note shows the general analysis for n-cavities operated in parallel with feedback loop involved. Strict mathematical demonstration is given. In two cavity case it is reduced to the result derived by F. Pedersen.[1] This note is an extension of his work.

For SSC collider RF system, different scenarios have been proposed in sequence. The total number of cavity ranges from 8 for the baseline scenario to 32 for normal conducting single cell scenario. The number of cavities fed by each klystron ranges from 2 for superconducting single cell scenario to 16 for nc single cell scenario. It is of concern how much symmetry tolerance is allowed for the parallel operation of cavities, especially in the case that feedback loop is employed to reduce the impedance seen by the beam, which is important for suppression of instabilities.

Fig. 1 illustrates an analytic model. We assume the beam current is the same for all cavities, and the total voltage V seen by the beam is simply the sum of the voltage of each cavity. The generator current fed to each cavity may be different due to the error of coupling structure or power divider. This results in different transmission function A_i ($A_i = I_{gi}/V_{in}$). The cavity dimensions and tunning status and the coupling rings may

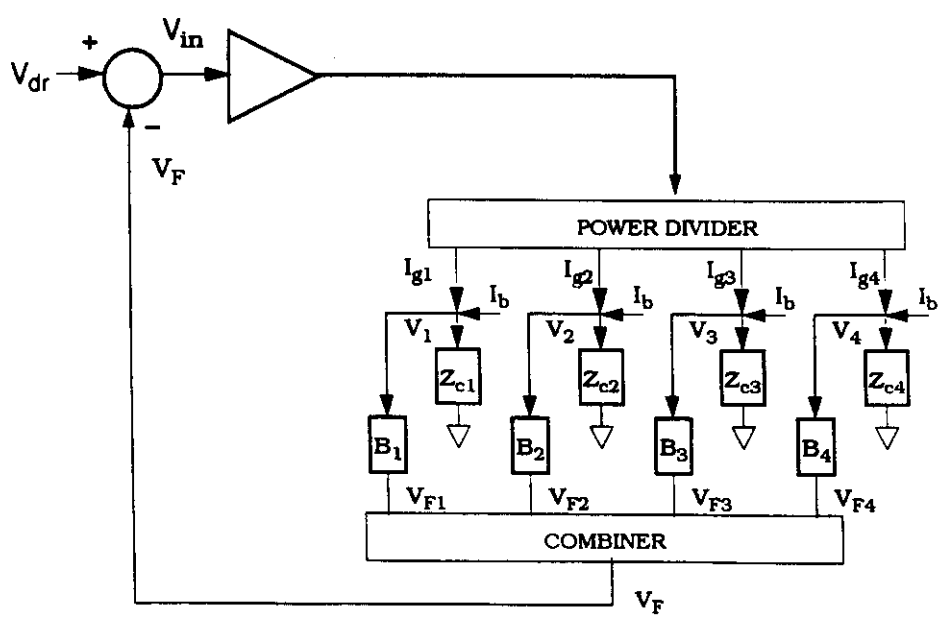

Fig.1 Feedback loop with a few cavities in parallel

also have errors, which result in different Z_{ci} and B_i, where Z_{ci} denotes *i-th* cavity impedance, and B_i the feedback factor of *i-th* cavity and is dimensionless.

Assume there are n cavities in parallel, from Fig. 1 we have:

$$\begin{aligned} V &= \sum V_i \\ V_i &= (I_b + I_{gi}) Z_{ci} \\ I_{gi} &= A_i (V_{dr} - V_F) \\ V_F &= \sum V_{Fi} \\ V_{Fi} &= B_i V_i \end{aligned} \tag{1}$$

where $\sum$ is the sum of all i ($i=1$ to n). This set of linear equation has two and only two independent variables: V_{dr} and I_b. Then the cavity voltage can be solved as:

$$V = Z_b I_b + K V_{dr} \tag{2}$$

Z_b is the impedance seen by the beam and K is the effective voltage gain. Since we are here only interested in the feedback loop, to assume $V_{dr}=0$ won't influence the general results. Dropping V_{dr} and solving above equation yields:

$$V_i = I_b Z_{ci} - A_i Z_{ci} \sum_{j=1}^{n} B_j V_j \qquad (i=1,2...n) \tag{3}$$

This is a linear equation set and can be expressed by a matrix equation:

$$\begin{pmatrix} a_{11}+1 & a_{12} & \dots & \dots & a_{1n} \\ a_{21} & a_{22}+1 & \dots & \dots & a_{2n} \\ \dots & \dots & \dots & \dots & \dots\dots \\ a_{n1} & a_{n2} & \dots & \dots & a_{nn}+1 \end{pmatrix} \begin{pmatrix} V_1 \\ V_2 \\ \dots \\ V_n \end{pmatrix} = \begin{pmatrix} Z_{c1} \\ Z_{c2} \\ \dots \\ Z_{cn} \end{pmatrix} I_b \tag{4}$$

where:

$$a_{ij} = A_i Z_i \cdot B_j \tag{5}$$

As can be seen from Appendix, this is a AB+1 type matrix. Its solution is straightforward:

$$\begin{aligned} V_i &= \frac{I_b}{\Delta_n} \sum_{j=1}^{n} Z_{cj} \Delta_{ji} \\ &= \frac{I_b}{\Delta_n} \{ Z_{ci} \left(1 + \sum_{j=1}^{n} a_{jj} \right) - \sum_{j=1}^{n} Z_{cj} a_{ij} \} \end{aligned} \tag{6}$$

and

$$\Delta_n = 1 + \sum_{j=1}^{n} a_{jj} \tag{7}$$

The whole voltage seen by the beam is:

$$V = \sum_{i=1}^{n} V_i = \frac{I_b}{\Delta_n} \{ \sum_{i=1}^{n} Z_{ci} + \sum_{i=1}^{n} \sum_{j=1}^{n} (a_{jj} Z_{ci} - a_{ij} Z_{cj}) \} \tag{8}$$

Substituting (5), the impedance seen by the beam can be expressed by:

$$Z_b = \frac{V}{I_b} = \frac{Z_{ct} + \delta Z}{1 + \sum_i A_i B_i Z_{ci}} \tag{9}$$

where

$$Z_{ct} = \sum Z_{ci} \tag{10}$$

is the total cavity impedance, and

$$\delta Z = \sum_{i=1}^{n} \sum_{j=1}^{n} Z_{ci} Z_{cj} (A_j - A_i) B_j = \sum_{i=1}^{n} \sum_{j=1}^{n} Z_{ci} Z_{cj} (A_i - A_j) B_i$$

$$= \frac{1}{2} \sum_{i=1}^{n} \sum_{j=1}^{n} Z_{ci} Z_{cj} (A_j - A_i) (B_j - B_i) \tag{11}$$

In order to express it in an explicit form of error, we assume:

$$\begin{aligned} Z_i &= Z_o (1+\Delta_{zi}), & \sum \Delta_{zi} &= 0 \\ A_i &= A_o (1+\Delta_{ai}), & \sum \Delta_{ai} &= 0 \\ B_i &= B_o (1+\Delta_{bi}), & \sum \Delta_{bi} &= 0 \end{aligned} \tag{12}$$

The subscript o indicates average value, so the sum of these relative error must be zero as shown in the above right hand side. Consequently it yields:

$$\sum \sum \Delta_{ai} \Delta_{bj} = 0 \tag{13}$$

$$\sum \sum \Delta_{ai} \Delta_{bi} = n \sum \Delta_{ai} \Delta_{bi} \tag{14}$$

Above equations are also valid if one of the factors is replaced by Δ_z or another combination. Substituting them into equation (9), after some algebraic manipulation, it can be rewritten as:

$$Z_b = \frac{Z_{ct} (1 + \Delta)}{1 + G Z_o (1 + \alpha)} \tag{15}$$

where:

$$\Delta = G Z_o \{ \frac{1}{n} \sum_i \Delta_{ai} \Delta_{bi} (1 + \Delta_{zi}) - \frac{1}{n^2} \sum_i \Delta_{ai} \Delta_{zi} \cdot \sum_j \Delta_{bj} \Delta_{zj} \} \tag{16}$$

$$\alpha = \frac{1}{n} \sum_i (\Delta a_i \Delta b_i + \Delta a_i \Delta z_i + \Delta b_i \Delta z_i + \Delta a_i \Delta b_i \Delta z_i) \tag{17}$$

and

$$G = A_o B_t \qquad \textit{(Open loop gain with unit } \Omega^{-1}\textit{)} \qquad (18)$$

$$B_t = nB_o. \qquad \textit{(Total feedback)} \qquad (19)$$

$$Z_{ct} = nZ_o \qquad \textit{(Total cavity impedance)} \qquad (20)$$

Obviously, for a perfect system without error, $\Delta=0$ and $\alpha=0$, above equation is reduced to a normal feedback equation, which means the total impedance is reduced in $1+GZ_o$ times.

In normal situation, it is expected the relative error are much smaller than one. From (17) one can see that $\alpha<<1$, so the deviation of the denominator in (15), is less important.. On the other hand, there is a large factor GZ_o in equation (16), therefore the asymmetry may have a significant influence.

Note that all those quantities are complex. As a practical criterion, following Pedersen's guideline[1] we require that the absolute value of Δ in (16) should not be larger than 0.2, which corresponds to a phase deviation less than $\pm 11°$, and the magnitude deviation less than 20%. Obviously, the most important is the first term. Then the criterion can be given as:

$$|\Delta| \approx \left| GZ_o \frac{1}{n} \sum_{i=1}^{n} \Delta_{ai}\Delta_{bi} \right| < 0.2 \qquad (21)$$

or

$$|\Delta_{am}\Delta_{bm}| < \frac{0.2}{|GZ_o|} \qquad (22)$$

where Δ_{am}, Δ_{bm} are the maximum errors. Evidently the criterion (22) is conservative.

Above equations show that the maximum error limit required does not depend on the number n. On the contrary, from statistics the larger the n, the smaller the Δ, providing (22) is satisfied. Besides, we found that the asymmetry of the cavities is less important than that of the couplings or the power dividers as the error term Δ_{zi} is not entered in equation (21). As shown in (16), it enters only in 3rd and 4th order minor terms and thus ignored.

Nevertheless, it should not conclude that one may pay less attention to the symmetrization for multi-cavity operation, because it usually requires multi-stages of power divider and their errors are cumulated, so that to realize the criterion (22) needs more cautiousness, though the criterion itself is to some extent conservative.

Now let's consider the case of two cavities. In this case

$$\Delta_{a1} = -\Delta_{a2} = \Delta_a, \quad \Delta_{b1} = -\Delta_{b2} = \Delta_b, \quad \Delta_{z1} = -\Delta_{z2} = \Delta_z,$$

then equation (15) deduces to:

$$Z_b = \frac{Z_{c1}(1 + GZ_o\Delta_a\Delta_b(1 - \Delta_z^2))}{1 + GZ_o(1 + \Delta_a\Delta_b + \Delta_a\Delta_z + \Delta_b\Delta_z)}$$

This is the same as derived by Pedersen [1], except some notations are different. The criterion (22) is also the same.

The author would like to thank Dr. D. Coleman for the beneficial discussions and his comments.

Reference

[1] F. Pedersen, "RF cavity feedback", Report on SLAC, 1992

APPENDIX Characteristics of AB+1-type matrix

If a matrix of order n has its elements in the following form:

$$a_{ij} = A_i B_j \tag{A1}$$

then its determinant must be zero:

$$\begin{vmatrix} a_{11} & a_{12} & \cdots & \cdots & a_{1n} \\ a_{21} & a_{22} & \cdots & \cdots & a_{2n} \\ \cdots & \cdots & \cdots & \cdots & \cdots \\ a_{n1} & a_{n2} & \cdots & \cdots & a_{nn} \end{vmatrix} = 0 \tag{A2}$$

Demonstration: from (A1), evidently we have:

$$a_{in}\, a_{jm} = a_{im}\, a_{jn} \tag{A3}$$

It reads: **the products of two elements equal to each other if their two subscripts have same number.** At above example, both products have i,l in the first subscript and j,m in the second subscript.

Therefore for any two order sub-determinant, we have:

$$\begin{vmatrix} a_{in} & a_{im} \\ a_{jn} & a_{jm} \end{vmatrix} = 0 \tag{A4}$$

Since higher order determinant is always a combination of lower order determinants, obviously (A2) is also true for any order determinants.

In order for identification, let's name this particular matrix.

Definition: An AB-type matrix is a matrix of which the elements satisfy (A1). An AB+1 type matrix is an AB type matrix except all diagonal elements are plus one, i.e.:

$$\begin{pmatrix} a_{11}+1 & a_{12} & \cdots & \cdots & a_{1n} \\ a_{21} & a_{22}+1 & \cdots & \cdots & a_{2n} \\ \cdots & \cdots & \cdots & \cdots & \cdots \\ a_{n1} & a_{n2} & \cdots & \cdots & a_{nn}+1 \end{pmatrix} \tag{A5}$$

Proposition: The determinant and subdeterminants of an AB+1 type matrix can easily be evaluated according to following equations:

$$\Delta_{ij} = -a_{ji} \qquad (i \neq j) \tag{A6}$$

$$\Delta_{ii} = 1 + \sum_{k=1}^{n} a_{kk} - a_{ii} \tag{A7}$$

$$\Delta_n = 1 + \sum_{k=1}^{n} a_{kk} \tag{A8}$$

It reads: the subdeterminant of element a_{ij} (for $i \neq j$), Δ_{ij}, is equal to its conjugate element except a sign, i.e. $-a_{ji}$. The value of n order determinant Δ_n is the sum of all diagonal elements a_{kk}, plus 1. For element a_{ii}, its subdeterminant is simply Δ_n subtracting itself.

Demonstration: We can use mathematical inductive method. For 2-order matrix, above equation is straightforward. For 3-order situation we have:

$$\Delta_{12} = -\begin{vmatrix} a_{21} & a_{23} \\ a_{31} & a_{33}+1 \end{vmatrix} = -a_{21} - \begin{vmatrix} a_{21} & a_{23} \\ a_{31} & a_{33} \end{vmatrix} = -a_{21} \tag{A9}$$

$$\Delta_{13} = \begin{vmatrix} a_{21} & a_{22}+1 \\ a_{31} & a_{32} \end{vmatrix} = -a_{31} + \begin{vmatrix} a_{21} & a_{22} \\ a_{31} & a_{32} \end{vmatrix} = -a_{31} \tag{A10}$$

Similarly, one can see equation (A6) is valid for any i,j. We can also demonstrate (A7) and (A8) by the same way:

$$\Delta_{11} = -\begin{vmatrix} a_{22}+1 & a_{23} \\ a_{32} & a_{33}+1 \end{vmatrix} = (a_{22}+1)(a_{33}+1) - a_{23}a_{32}$$
$$= 1+a_{22}+a_{33} \tag{A11}$$

$$\Delta_3 = 1 + a_{11} + a_{22} + a_{33} \tag{A12}$$

Evidently, it is also true for Δ_{22} and Δ_{33}.

We can then prove the validity of (A6) to (A8) in any order n, provided they are valid for n-1 order. As a demonstration, let's check a 5-order determinant.

$$\begin{vmatrix} a_{11}+1 & a_{12} & a_{13} & a_{14} & a_{15} \\ a_{21} & a_{22}+1 & a_{23} & a_{24} & a_{25} \\ a_{31} & a_{32} & a_{33}+1 & a_{34} & a_{35} \\ a_{41} & a_{42} & a_{43} & a_{44}+1 & a_{45} \\ a_{51} & a_{52} & a_{53} & a_{54} & a_{55}+1 \end{vmatrix} \tag{A13}$$

For Δ_{11}, the subdeterminant of a_{11}, the result is straightforward:

$$\Delta_{11} = 1 + a_{22} + a_{33} + a_{44} + a_{55}$$

since Δ_{11} is an AB+1 type determinant with n-1 order, that is similar as (A13) except erasing the first row and first column, so (A8) is applicable and only a_{11} is missing.

Similarly, it is true for any subscript *ii (i=1 to 5)*. This proves the validity of (A7) for next higher order.

The equation (A6) is proven as follows:

$$\Delta_{12} = (-1)^{i+j} \times \begin{vmatrix} a_{21} & a_{23} & a_{24} & a_{25} \\ a_{31} & a_{33}+1 & a_{34} & a_{35} \\ a_{41} & a_{43} & a_{44}+1 & a_{45} \\ a_{51} & a_{53} & a_{54} & a_{55}+1 \end{vmatrix} \qquad \text{(here i=1, j=2)}$$

$$\begin{aligned} &= -\{a_{21}\Delta_{21} + a_{23}\Delta_{23} + a_{24}\Delta_{24} + a_{25}\Delta_{25}\} \\ &= -\{a_{21}(1+a_{33}+a_{44}+a_{55}) - a_{23}a_{31} - a_{24}a_{41} - a_{25}a_{51}\} \\ &= -a_{21} \end{aligned} \qquad \text{(A14)}$$

Note that here we've applied (A8) for Δ_{21}, and (A6) for Δ_{31}, Δ_{41}, Δ_{51}, where the conjugate elements of a_{23}, a_{24}, a_{25} are a_{31}, a_{41}, a_{51} respectively. The latter argument is correct because their subdeterminants are exactly the same as that of the following determinant:

$$\begin{vmatrix} a_{11}+1 & a_{13} & a_{14} & a_{15} \\ a_{31} & a_{33}+1 & a_{34} & a_{35} \\ a_{41} & a_{43} & a_{44}+1 & a_{45} \\ a_{51} & a_{53} & a_{54} & a_{55}+1 \end{vmatrix} \qquad \text{(A15)}$$

which is an AB+1 type determinant and the equations (A6) to (A8) are applicable. Moreover, (A3) has been applied for cancelling items. Similar process can be used for other subscripts *i,j*. This proves the validity of (A6) for next higher order.

At last, (A8) can be deduced from (A6) and (A7) as follows:

$$\begin{aligned} \Delta_5 &= (a_{11}+1)\Delta_{11} + a_{12}\Delta_{12} + a_{13}\Delta_{13} + a_{14}\Delta_{14} + a_{15}\Delta_{15} \\ &= (a_{11}+1)(1+a_{22}+a_{33}+a_{44}+a_{55}) - a_{12}a_{21} - a_{13}a_{31} - a_{14}a_{41} - a_{15}a_{51} \\ &= 1 + a_{11} + a_{22} + a_{33} + a_{44} + a_{55} \\ &= 1 + \sum_{k=1}^{n} a_{kk} \end{aligned} \qquad \text{(A16)}$$

Thus we found that an AB+1 type matrix is pretty easy to handle as its results shown in (A6) to (A8).