SSCL-N-815

Optimization of the Two Kickers Transverse Damping System for the SSC

G. López, E. Tsyganov, S. Chen, and R. Meinke

Superconducting Super Collider Laboratory*
2550 Beckleymeade Avenue
Dallas, Texas 75237

April, 1993

* Operated by the Universities Research Association, Inc., for the U.S. Department of Energy under Contract No. DE-AC35-89ER40486.

Optimization of the Two Kickers Transverse Damping System for the SSC

G. López, E. Tsyganov, S. Chen, and R. Meinke

Abstract

A two Beam Position Monitors (BPMs)-two kickers transverse damping system for providing control of the dipole mode multibunch instability in the Superconducting Super Collider (SSC) is outlined. The configuration (B1-K1-B2-K2) permits exact one-turn orbit compensation for a gain equal to one. This system is optimized and compared with the configuration (B1-B2-K1-K2). It is shown that for some particular cases both configurations are equivalents, and that the (B1-K1-B2-K2) configuration is more restricted. The possibility of using this system to control the multibunch instabilities due to high frequency resistive wall impedance, narrow band rf- cavities impedance, quadrupole motion, power supply ripples, and injection error is discussed.

1.0 INTRODUCTION

Damping the dipole mode transverse multibunch instability is of primary importance for high current-many bunches storage and collider machines (SSC, LHC, and UNK) since it provides stability in the beam. Otherwise, the expected luminosity of the machine may drastically be reduced. One of the main instabilities of concern in the SSC Collider accelerator at low frequency is caused by the resistive wall impedance. Simulation studies done of the dipole mode multibunch instabilities due to the resistive wall impedance in the Collider[1] indicate that a two BPMs-two kickers (TBK) damping system has much better control of this instability than the traditional one BPM-one kicker damping system having the possibiity of reducing the gain by about one order of magnitude. This result coincided with the observation made of the need of using two kickers at UNK[2] to control the stainless steel resistive wall instability.

The TBK damping system could be configured in the form B1-B2-K1-K2 or as B1-K1-B2-K2. In addition, this system could be coupled (the information of the BPMs can be shared) or uncoupled (this information is not shared). In the simulations, only an uncoupled TBK damper was under consideration. But, analytical optimization studies of this system were not made. For the TBK damping system B1-B2-K1-K2, a general analytical optimization has been done recently[3] using a single particle trajectory approximation. In this report, the TBK damping system B1-B2-K1-K2 is written for two particular cases, and the TBK damping system B1-K1-B2-K2 is optimized. The comparison of both configurations is made.

2.0 ANALYSIS OF THE B1-B2-K1-K2 SYSTEM

A general oscillation of a single-particle trajectory is shown in Figure 1, where (α_i,β_i), $i = 1,...4$ are the Courant-Snyder parameters of the lattice at the location of the B1, B2, K1 and K2 elements; (X_i,X_i'), $i = 1,...,4$ are the coordinates in the phase space of the particle at the location of the above elements; and ϕ, ψ, and ξ are the relative phase advance between the elements. A very simplified analysis can be made choosing $\phi = \xi = \pi/2$. Then, using the Courant-Synder map[4] and a knowlege of the displacement of the particle at the BPMs, X_1 and X_2, the displacement coordinates at location K1 can be known,

$$X_3 = \sqrt{\frac{\beta_3}{\beta_2}}\ \cos\psi\ X_2 - \sqrt{\frac{\beta_3}{\beta_1}}\ \sin\psi\ X_1\ . \tag{1}$$

Then, there are two simple possibilities: (1) the kick provided by K1 is decoupled from B1 or (2) B2. The kick provided by K2 is kept coupled to B1 and B2.

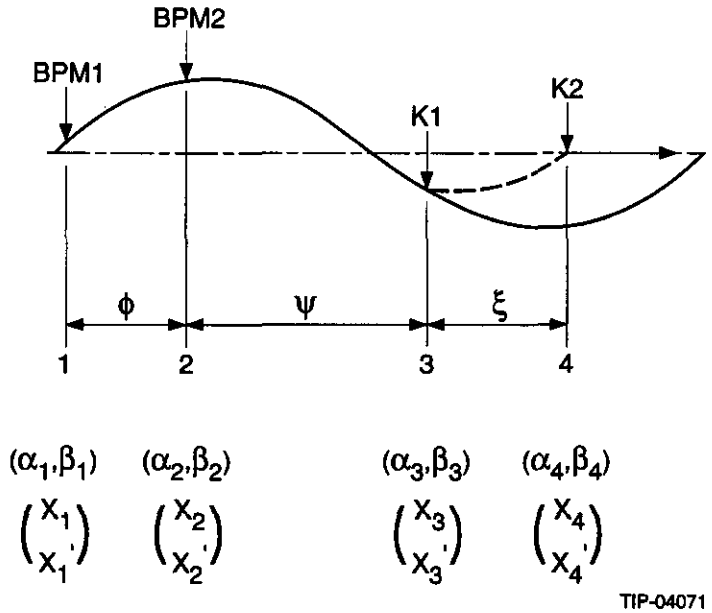

Figure 1. Overlapped-Coupled (B1-B2-K1-K2) TBK Damping System.

2.1 K1 Decoupled of B1

In this case, the slope at K3 is given by

$$X_3' = -\frac{X_2}{\sqrt{\beta_3\beta_2}}(\sin\psi + \alpha_3\cos\psi - g_1) - \frac{X_1}{\sqrt{\beta_3\beta_1}}(\cos\psi - \alpha_3\sin\psi) \ , \tag{2}$$

where the kicker K1 has provided a kick to the particle given by

$$\Delta X'_{K1} = \frac{g_1}{\sqrt{\beta_3\beta_2}}\ X_2 \ . \tag{3}$$

The coordinates at the location K2 (before the kick) are given by

$$X_4 = X_2\sqrt{\frac{\beta_4}{\beta_2}}\,[g_1 - \sin\psi] - \frac{X_1}{\sqrt{\beta_4\beta_1}}\cos\psi \tag{4a}$$

and

$$X_4' = -\frac{X_2}{\sqrt{\beta_4\beta_2}}(\cos\psi - \alpha_4\sin\psi) + \frac{X_1}{\sqrt{\beta_4\beta_1}}(\sin\psi + \alpha_4\cos\psi) \ . \tag{4b}$$

From these equations, it is clear that optimum performance can be obtained for

$$\psi = (2m+1)\frac{\pi}{2} \tag{5}$$

since if $g_1 = 1$, then $X_4 = 0$ independent of the particle phase. Therefore, using Eq. (5), the kick provided by the kicker K2 must be

$$\Delta X'_{K2} = -\frac{g_2\alpha_4}{\sqrt{\beta_4\beta_2}}\ X_2 - \frac{g_2}{\sqrt{\beta_4\beta_1}}\ X_1 \ , \tag{6}$$

where g_2 is the gain of the electronic system for K2.

2.2 K1 Decoupled of B2

The slope at K3 is given by

$$X_3' = -\frac{X_2}{\sqrt{\beta_3\beta_2}}(\sin\psi + \alpha_3\cos\psi) - \frac{X_1}{\sqrt{\beta_3\beta_1}}(\cos\psi - \alpha_3\sin\psi + g_1) \ , \tag{7}$$

where the kicker K1 has provided a kick to the particle given by

$$\Delta X'_{K1} = \frac{g_1}{\sqrt{\beta_3\beta_1}}\ X_1 \ . \tag{8}$$

The coordinates at the location K2 (before the kick) are given by

$$X_4 = -X_2\sqrt{\frac{\beta_4}{\beta_2}}\sin\psi - \frac{X_1}{\sqrt{\beta_4\beta_1}}\left[\cos\psi - g_1\right] \tag{9a}$$

and

$$X_4' = -\frac{X_2}{\sqrt{\beta_4\beta_2}}(\cos\psi - \alpha_4\sin\psi) + \frac{X_1}{\sqrt{\beta_4\beta_1}}\Big(\sin\psi + \alpha_4(\cos\psi - g_1)\Big) \ . \tag{9b}$$

From these equations, it is clear that optimum performance can be obtained for

$$\psi = 2m\pi \ . \tag{10a}$$

With this phase advance, the kick provided by the kicker K2 is given as

$$\Delta X'_{K2} = -\frac{g_2}{\sqrt{\beta_4\beta_2}}\ X_2 + \frac{g_2\alpha_4(1-g_1)}{\sqrt{\beta_4\beta_1}}\ X_1 \ , \tag{10b}$$

where g_2 is the gain associated with K2.

3.0 ANALYSIS OF THE (B1-K1-B2-K2) SYSTEM

This system is of particular interest since simulation indicates that even the nonoptimized B1-K1-B2-K2 system has much better performance to control the resistive wall instability than the conventional one BPM-one kicker system. The general case is given by the same Figure 1 but interchanging B2 for K1. To simplify the analysis, the phase advances will be taken like those of the previous case. In this system there is only one simplified case: the first kicker, K1, provides a correction in the slope of the particle trajectory given by

$$\Delta X'_{K1} = \frac{g_1}{\sqrt{\beta_1\beta_2}}\ X_1 \ , \tag{11}$$

where g_1 is the gain of the electronic system. The reason is that displacement X_1 is the only variable known before K1, in the first turn. Using the Courant-Snyder map to transport

the particle from B1 to K2 and after rearangement terms, the coordinates of the bunch at K2 are given by

$$X_4 = -\sqrt{\frac{\beta_4}{\beta_3}}\ \tan\psi\ X_3 - \sqrt{\frac{\beta_4}{\beta_1}}\ \frac{1-g_1}{\cos\psi}\ X_1 \tag{12a}$$

and

$$X_4' = \frac{-1+\alpha_4\tan\psi}{\sqrt{\beta_4\beta_3}}\ X_3 + \frac{\alpha_4(1-g_1)}{\sqrt{\beta_4\beta_1}\ \cos\psi}\ X_1\ . \tag{12b}$$

Therefore, K2 will make a correction given by

$$\Delta X'_{K2} = -\frac{g_2(-1+\alpha_4\tan\psi)}{\sqrt{\beta_4\beta_3}}\ X_3 - \frac{\alpha_4 g_2(1-g_1)}{\sqrt{\beta_4\beta_1}\ \cos\psi}\ X_1\ , \tag{13}$$

where g_2 is the gain of the electronics associated with this signal (g_2 and g_1 do not have to be the same). A possible optimum value is found by selecting the phase advance of the form

$$\psi = \tilde{m}\pi\ , \tag{14}$$

where $\tilde{m}$ is any integer number. It is clear that if the phase is given by Eq. (14) and the gain is $g_1 = 1$, then $X_4 = 0$ independently on the initial phase of the particle, and the system is completely decoupled (the correction at K2 depends on B2). Note that for the particular case (14), the case 2.2 and this case are equivalents, but they differ for other phase advances. Phase advance given by Eq. (5) is not allowed in this system.

Simulations were done for the resistive wall instability case using the computer program TADIMMI (Transverse Dipole Mode Multibunch Instability) and this optimized configuration given above ($m = 0$), or eqivalently the case 2.2. Figure 2 shows the average displacement value of bunches measured by BPM1, and Figure 3 shows the displacement behavior of bunch 1000 measured at BPM1. The parameters of the TBK feedback system to control resistive wall instability in the Collider are also shown. In this simulation, it has been assumed a full symmetric filling ring of bunches traveling at low energy (2 TeV), as the worst case scenario for multibunch instabilities. The bandwidth of the feedback system was defined by the batch-to-batch separation, $BW \geq 0.3$ MHz, and the flat-top duration of the kickers is equivalent to one Collider turn (0.29 ms).

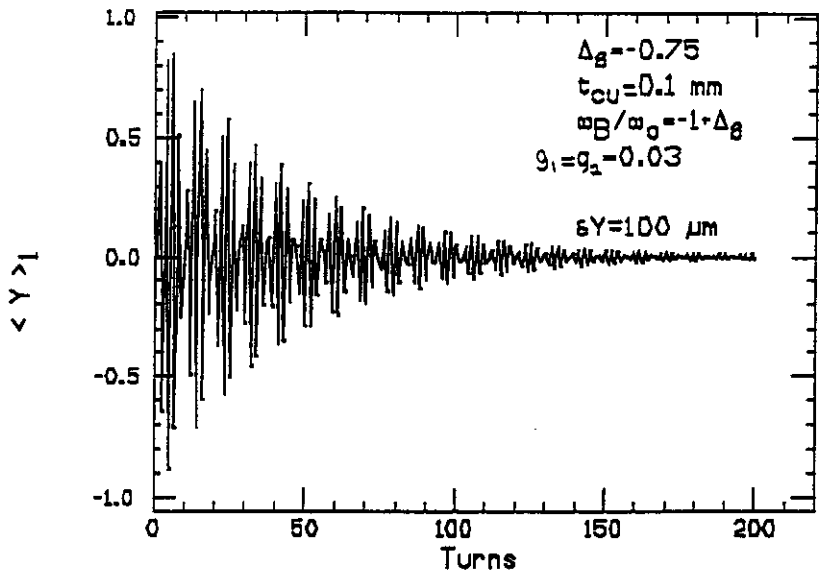

Figure 2. Average Displacement of the Bunches at BPM1. t_{cu} is the copper coated thickness in the beam pipe. $1 + \Delta_\beta$ is the fractional part of the tune.

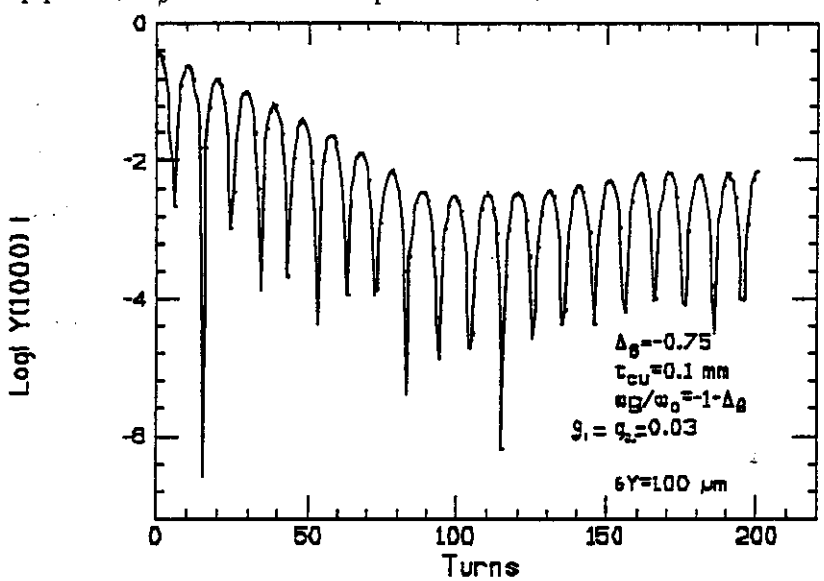

Figure 3. Single Bunch Behavior at the BPM.

4.0 MINIMUM CONFIGURATION AND LOGIC CIRCUIT

The minimum configuration in the phase advance distance is obtained setting $\tilde{m} = m = 0$ in Eqs. (5), (10), and (14). The (B1-B2-K1-K2) configuration requires a total phase advance of $3\pi/2$ and π for cases 2.1 and 2.2. The configuration (B1-K1-B2-K2) requires also a total phase advance of π and is equivalent to the previous 2.2 case. The (B1-B2-K1-K2) configuration, case 2.2, or the (B1-K1-B2-K2) configuration with $\tilde{m} = m = 0$ can be installed in the west utility region of the Collider.

From Eqs. (4a), (9b), and (13) and for both configurations, the kick provided by the second kickers can be expressed as linear combinations of the pickup signals, where the

tune-depending coefficients can be known from the mentioned expressions. To make signal corrections due to changes in tune,[5] another BPM may not be required since B1 and B2 can be used to do this measurement. Figures 4a thru 4c show the logic circuit of information for these cases.

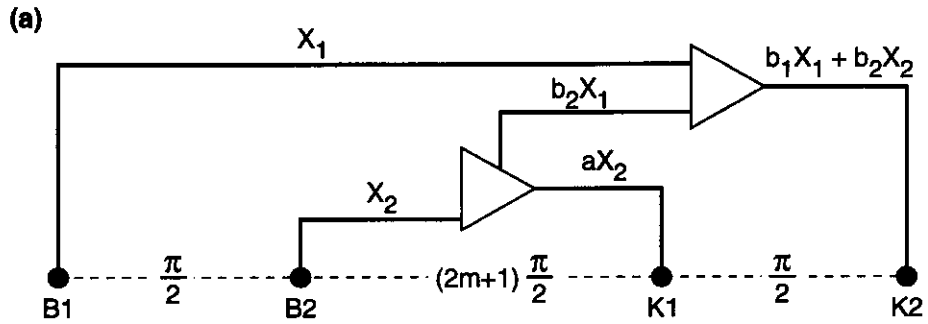

Figure 4a. Logic for the (B1-B2-K1-K2) System, Case 2.1.

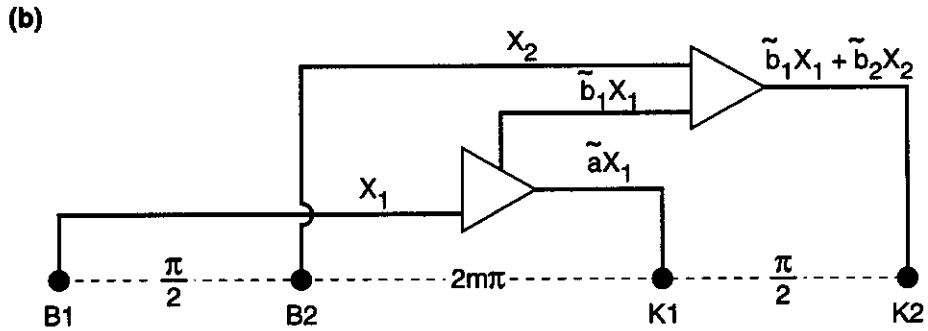

Figure 4b. Logic for the (B1-B2-K1-K2) System, Case 2.2.

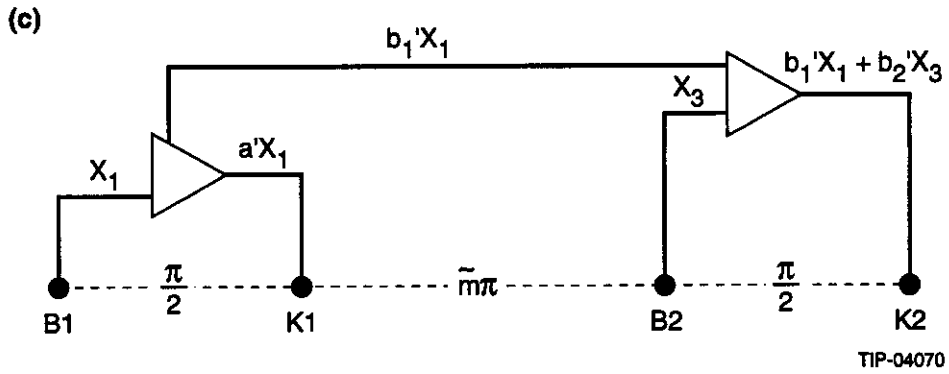

Figure 4c. Logic for the (B1-K1-B2-K2) System.

5.0 RESULTS AND COMMENTS

An analytical optimization has been done of the novel TBK damping system with configuration (B1-K1-B2-K2) using a single particle trajectory approximation. This brief approximated analysis, in turn, shows why the two BPMs-two kickers feedback system works so well as first described Reference 1. This system is capable of canceling exactly the oscillations of the particle in a single turn (if $g_1 = g_2 = 1$), independent of the particle phase, which it is not possible to do with a single conventional kicker. It is pointed out that this is true independent of the relative phase advances ϕ, ψ, and ξ for the configuration (B1-B2-K1-K2), see reference 3, but for the configuration (B1-K1-B2-K2), it is true only for the phase advances $\phi = \xi = (2n+1)\pi/2$, and $\psi = \tilde{m}\pi$. Therefore, the latter configuration is more restricted.

To control multibunch instabilities arising from the rf-cavities or resistive wall impedance at high frequencies, the data processing must be done in a bunch-by-bunch mode (bandwidth of the electronic system must be at least 30 MHz). Using this mode, the TBK damper could control these instabilities. This bunch-by-bunch mode cannot make the correction in the same turn; there will be at least a one-turn delay. As mentioned in the introduction, the TBK damping system is required for resistive wall instability at low frequencies (fractional part of the tune times the revolution frequency), and the simulations show that it will work very well controlling this instability. By choosing the feedback bandwidth, defined by the batch-to-batch separation, this same TBK damper system can be used for batch injection errors.

As mentioned before, making the gains equal to one, $g_1 = g_2 = 1$, it is possible, in principle, to damp any oscillation in one turn. However, in practice, external noise like power supply ripples, magnetic random errors, ground vibrations, and other possible sources make this unlikely.[6] In addition, the feedback noise increases if the gain increases and this is a very important source of emittance blow-up. Therefore, it is better to keep the gain as small as possible, but high enough to obtain good damping before decoherence, due to tune spread in the bunch spectra, causes resonant emittance growth due to external noise spectra at the resonant betatron frequencies.[7] This damping will be done in less than 150 turns for resistive wall instability at low-frequency impedance since the growth time could be about 50 ms (in this case the decoherent effect is not relevant). For rf cavity and resistive wall impedance at high frequency, damping must be in less than 1000 turns; decoherent time is about 0.4 sec, (in this case the dipole mode instability growth time is about 1 sec and is not the most important). The threshold feedback noise for controlling the multibunch instabilities is large enough so that one does not have to worry about it.[1] Emittance growth due to the feedback noise requires careful simulation studies now in progress.

ACKNOWLEDGEMENTS

One of the authors, G. López, wishes to thanks Dr. R. Schwitters and Dr. R. Meinke for their support at the SSC Laboratory.

REFERENCES

1. S. Chen and G. López, "Simulation Studies of the Transverse Dipole Mode Multibunch Instability for the SSC Collider," SSCL-614, to be published.
2. B. Sheldon, memorandum Sept. 30, 1992.
3. E. Tsyganov, G. Dugan, G. López, R. Meinke, W. Nexsen, R. Talman, "SSC Damper System," to be published.
4. E. D. Courant and H. S. Snyder, *Annals of Phys.*, **3**, **1** (1958).
5. E. Raka, *Part. Acc.*, Vol **27**, **21** (1990).
6. V. A. Lebedev, "Computer Simulation of the Emittance Growth due to Noise in Large Hadron Colliders," SSCL-Preprint-191, March 1993.
7. V. A. Lebedev, *et al.*, Preprint 41-120, Novosibirsk, 1991.