SSCL-N-796

Documentation for "ICTEST": A Data Acquistion and Data Reduction Routine

J. M. Seuntjens and E. Coleman

Superconducting Super Collider Laboratory*
2550 Beckleymeade Ave.
Dallas, TX 75237

July 1992

*Operated by the Universities Research Association, Inc., for the U.S. Department of Energy under Contract No. DE-AC35-89ER40486.

1.0 INTRODUCTION

A first edition is presented of a LabVIEW[1] virtual instrument (VI) called ICTEST that collects and processes data for superconducting critical current testing. This VI collects data on a real-time *x-y* graph, performs a linear baseline subtraction, calculates a temperature-corrected critical current (I_C) based on an input resistivity criterion, and writes the raw data to a two-column format readable by Microsoft Excel running on a Macintosh. At the end of the file, the input parameters of wire diameter, voltage tap gauge length, copper-to-superconductor ratio, resistivity criterion, background magnetic field, and temperature correction factor, as well as the calculated values of I_C, critical current density (J_C), and n, a measure of critical current transition quality, are written with labels and units.

The hardware for this data collection system consists of two Keithley 182 microvoltmeters, a Hewlett-Packard 6464C 1000-A power supply, a Hewlett-Packard 6031A 120-A power supply, and a Dynapower ZFCT (zero flux current transformer). One voltmeter measures the sample voltage and the other reads the output of the ZFCT. The 1000-A power supply provides a background current approximately 110 A below I_C. The additional current to nearly quench the sample is provided by the 120-A power supply connected in parallel with the 1000-A supply. Any two IEEE-488 controlled voltmeters and power supply will work with ICTEST.

ICTEST runs with LabVIEW on a Macintosh II computer equipped with 5 Mbytes of RAM and a 40-Mbyte hard disk. The Mac II has an IEEE-488 interface board connected to the 120-A supply and to the two voltmeters. The 1000-A power supply can be, but is not currently, computer-controlled. This version of the program is capable of collecting data at 2–3 Hz, and full data reduction occurs automatically after data collection in approximately 3–5 seconds for our typical data files of 200–300 data points.

2.0 THE IC TEST VIRTUAL INSTRUMENT

The figures included in this note contain printouts of the front panels and block diagrams for the main VI "ICTEST" as well as its main subVI, called "DATA RED". Other VIs are called on to operate ICTEST and DATA RED, which are included in the LabVIEW package. These built-in VIs, called functions, perform mathematical tasks and communications to the meters and power supply, as well as file manipulations.

ICTEST initializes the instruments in communication with the computer, collects the raw data, calls on DATA RED to determine I_C, J_C, and n values, and then writes the raw data, the input parameters, and the calculated I_C, J_C, and n values to a file. The file name is used to identify the sample name.

The ICTEST front panel is color-coded to allow the user to distinguish between different types of information displayed. Figure 1 contains the front panel in black-and-white laser printout. Blue input boxes contain information about the sample required for making the I_C, J_C, and n calculations. The blue inputs, at the top right of the front panel, are (from left to right) the wire diameter, gauge length, copper-to-superconductor ratio, resistivity criterion, magnetic field, polarity, and temperature correction factor. The polarity switch multiplies the voltage by 1 or –1 to always allow the V vs. I curve to bend upward, as required for the DATA RED VI to operate properly. The temperature correction factor is calculated from data for the appropriate applied magnetic field in the temperature corrections for the National Institute of Standards and Testing (NIST) standard reference material.[2] The NIST I_C data as a function of applied magnetic field and temperature are an appendix to this document. The ratio input into ICTEST is determined by the ratio of the reference material I_C at the "standard" temperature of 4.22 K to I_C at the actual measurement temperature.

The green displays on the ICTEST front panel are the real-time outputs from the data collection, which include the graph, the present values of the current and voltage on the sample, and the present number of data points in the run. The calculated parameters I_C, J_C, and n are coded yellow and do not get updated until completion of the DATA RED program. The remaining items on the front panel are orange-colored controls that the operator manipulates during the data collection to obtain the desired data. The ON/OFF switch starts and stops the data collection. Data collection always starts fresh when

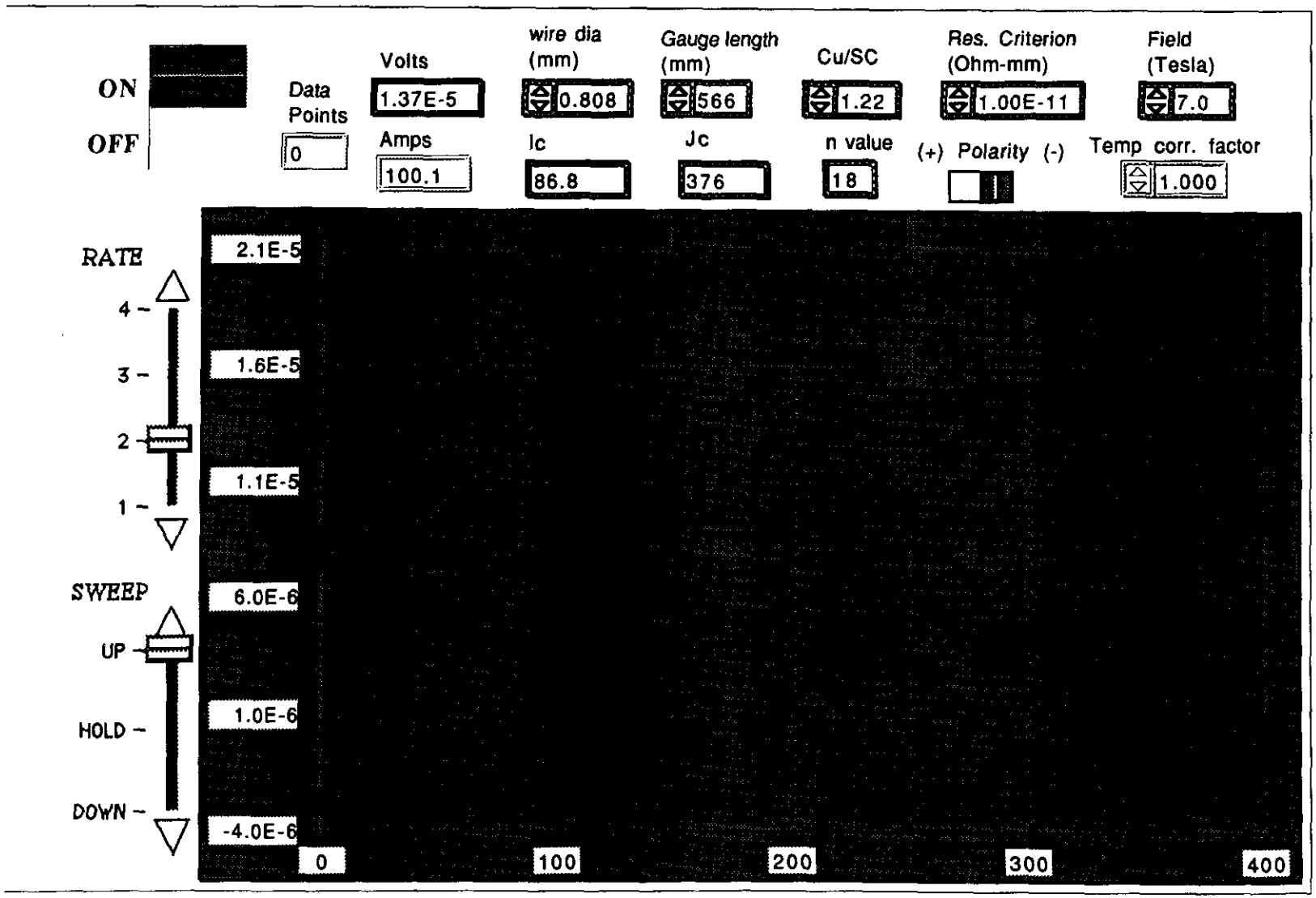

Figure 1. ICTEST Front Panel.

the switch is turned on. The rate and sweep controls govern the speed and direction of the current ramp. The sweep control is up for increasing current, down for decreasing current, and hold for maintaining a fixed present value of current. The rate of change is slowest at a value of "1" and fastest at a value of "4". The actual rate of change of current is adjustable in the program and will vary with the speed of the computer used for running the program. The clock speed of the program can be slowed for faster operating computers.

Figure 2 is a four-page printout of the block diagram that represents the ICTEST VI. Modifying the block diagram is equivalent to changing the ICTEST program. Recompiling of the VI occurs automatically as modifications are made. The block diagram executes from upper left to lower right. On the far left of Figure 2 is a sequence structure box that executes serially from frame zero onward. Viewing the sequence structure on the computer involves clicking on the arrows on either side of the sequence number. All steps of the sequence structure have been shown in Figure 2, where steps of the sequence are stacked vertically. In this first sequence structure, the instruments in communication with the computer are initialized. The initialization string in each step sets up the full scale range, the number of significant digits, absolute or relative reading, integration constants, etc., as described in the instrument manuals. The voltmeter measuring current is initialized first (step zero), followed by the voltmeter measuring the sample voltage (step 1) and the current power supply (step 2).

The next box with the rounded corners is the data collection loop. This box is called a "while" loop, and items in this loop are executed "while" the data collection on-off switch is turned on. An initial array of zeros is first input for both the x and y values in the upper left. The sequence step 0 measures the current value and multiplies by 1000. (In the ZFCT used, 1V out = 1000 A.) The sequence box step 1 measures the sample voltage and multiplies by 1000 in our case, where millivolts are output. Note that the polarity switch can reverse the sign of the collected data. The switch is false in the left position (positive polarity, multiplying the voltage values times 1) and true in the right position (negative polarity, multiplying the voltage values times –1). Sequence step 2 sets a new current value. The values of rate and sweep are input into a set of nested case structure boxes at the top of sequence step 2. The value of the new current level is determined by adding a value of sweep times rate to the previous current value. Sweep has a value of 1 for increasing current, zero for holding, and –1 for decreasing current. Rates have values of 0.3, 0.5, 2, and 4 for settings of 1, 2, 3, and 4, respectively, and are contained in their respective cases. The particular case actuated is determined by the value of the rate and sweep set on the front panel. The rates are tied to incremental numbers for the 4096 steps between the minimum and maximum current out of the power supply. Values less than zero are set to zero by the case structure box to the left of the power supply icon. Figure 2 shows all permutations of the nested functions below the data collection box. When the operator obtains the desired data, the data collection switch is turned off. This stops the data collection in the "while" loop by setting the round arrow box in the lower-right-hand corner of the "while" loop to false.

After data collection is complete, ICTEST proceeds to the sequence box on the right to reduce and store the raw data and its input parameters, as well as the calculated I_C, J_C, and n. Step zero resets the power supply to zero amperes. Step 1 calls DATA RED to reduce the data using the given inputs from the front panel, and DATA RED returns the I_C, J_C, and n values. DATA RED will be discussed below. Step 2 opens a file. Step 3 writes the raw data to the file. First an x value is written to a file with 4 significant digits along with a tab. Then the corresponding y value is written on the same line of the file in an adjacent column, followed by a return command to put the next data pair on the next line. This continues in the sequence structure box until all data is written. Steps 4 and 5 write the input parameters along with DATA RED's calculated data on separate lines at the end of the file with their corresponding labels. Step 6 closes the file. The operator will be asked for the filename in the same manner as the "save as" command in any Macintosh program.

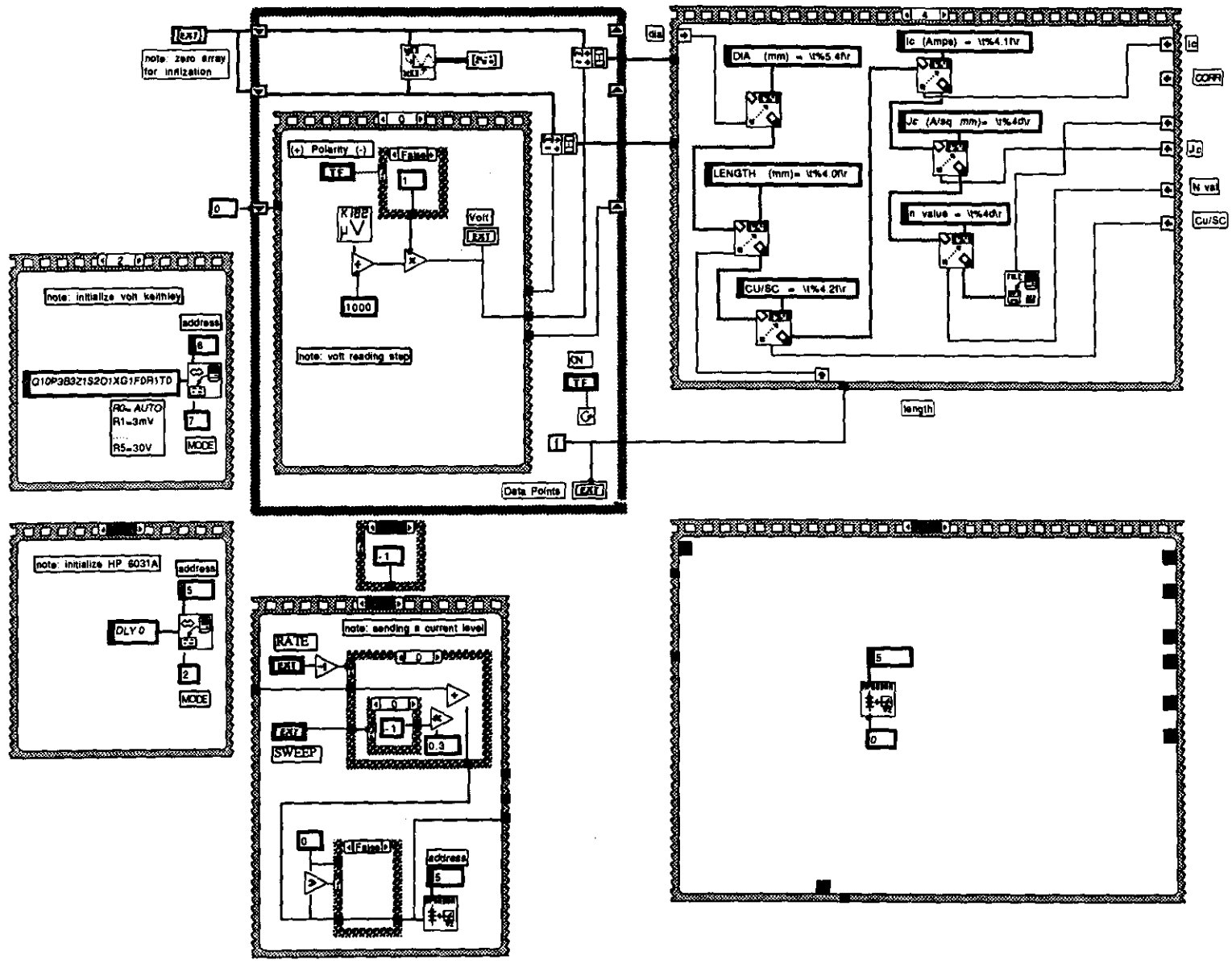

Figure 2. Block Diagram Representing the ICTEST VI.

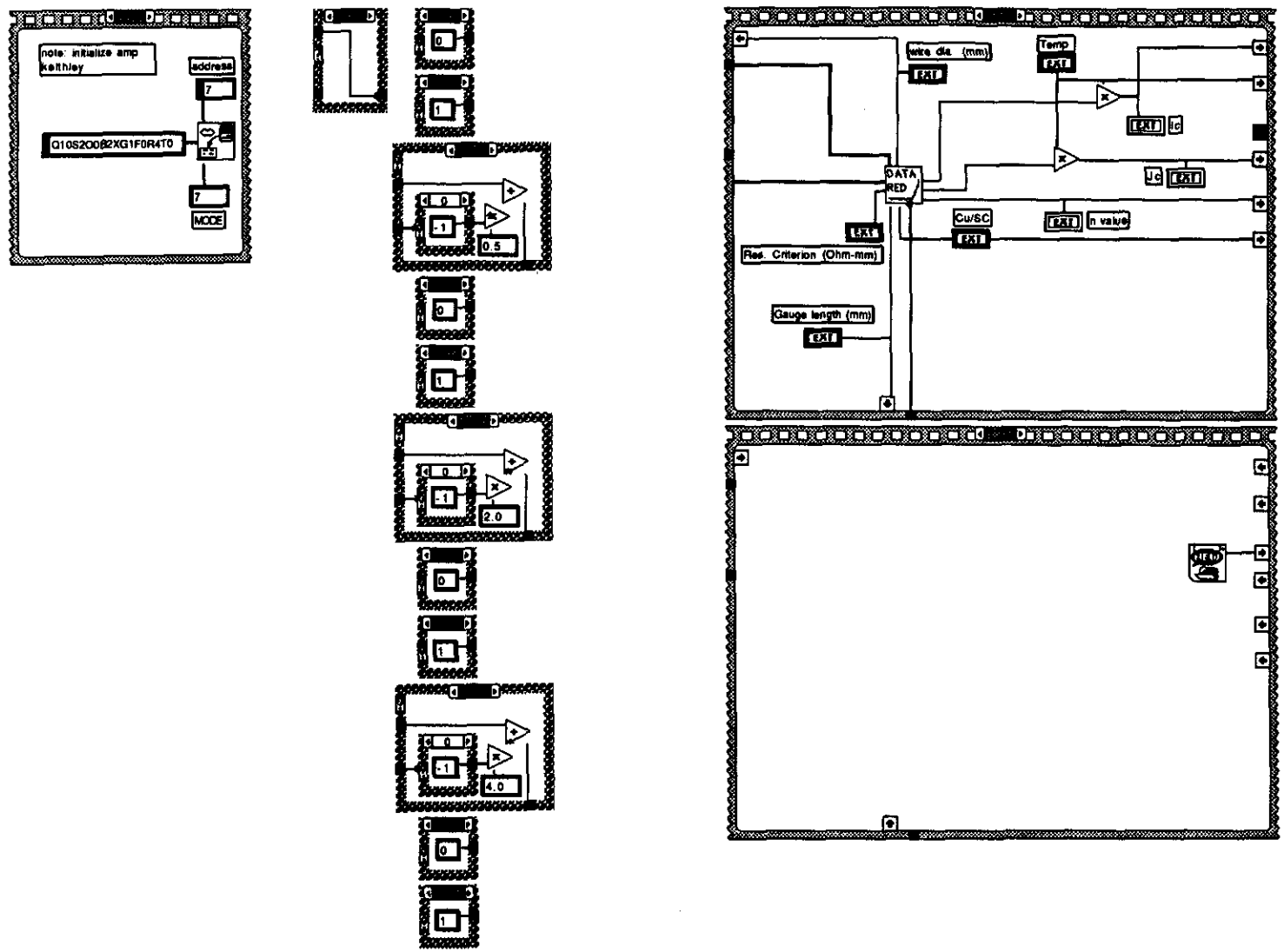

Figure 2. Block Diagram Representing the ICTEST VI (continued).

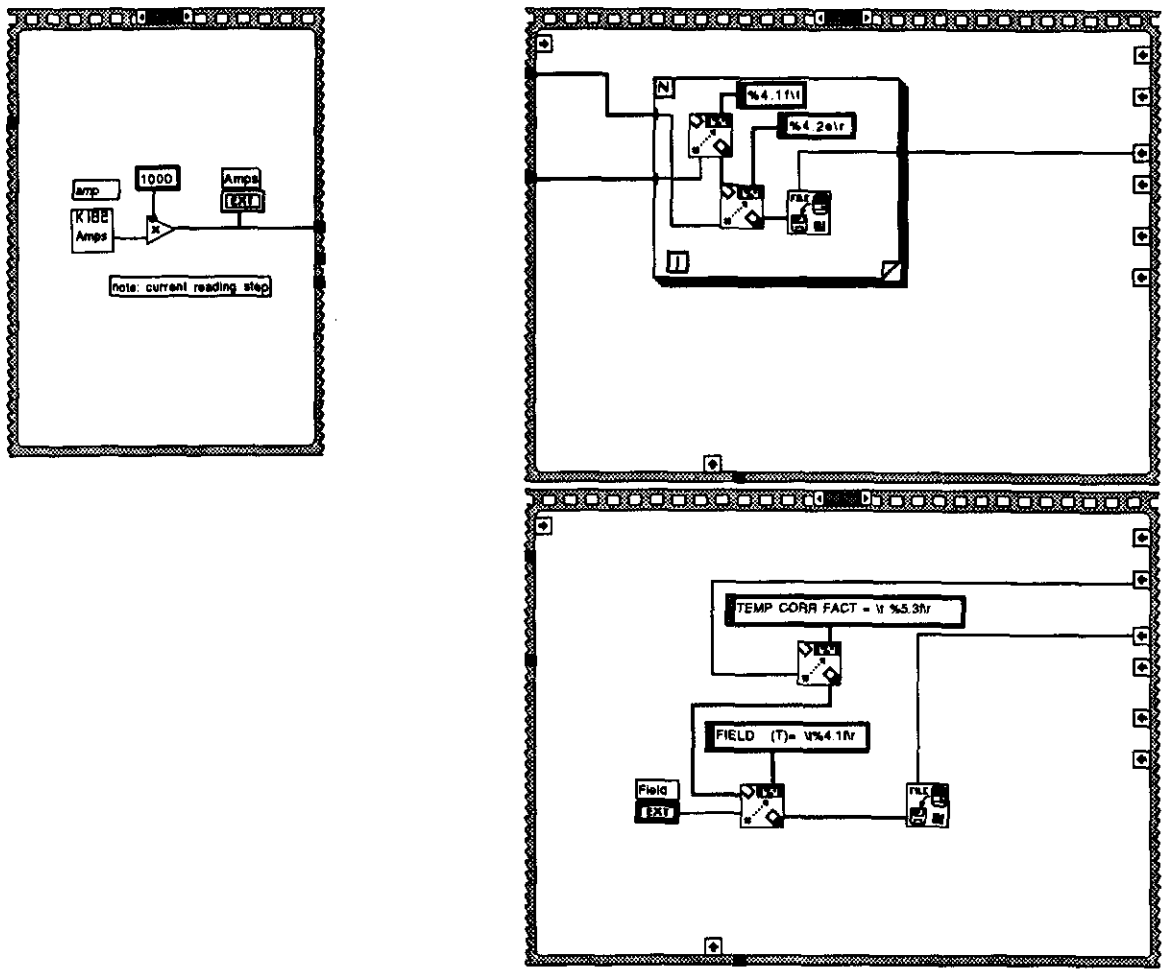

Figure 2. Block Diagram Representing the ICTEST VI (continued).

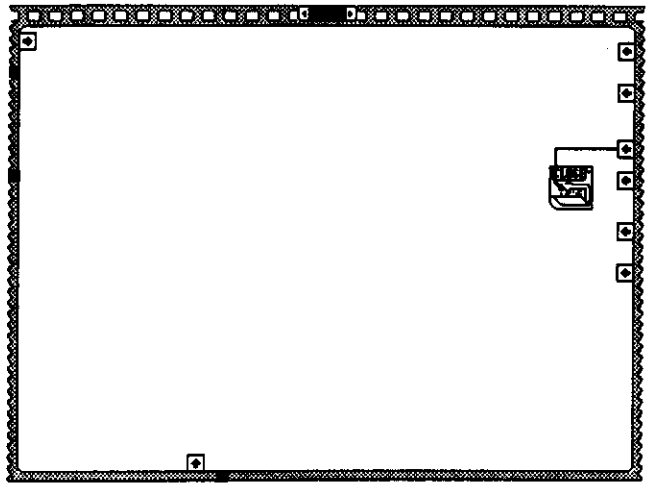

Figure 2. Block Diagram Representing the ICTEST VI (continued).

3.0 DATA RED VI

The DATA RED VI has all of the input parameters of the ICTEST VI. The inputs are color coded identically to the front panel of the ICTEST VI. No orange-control parameters exist since DATA RED is not run by itself. Figure 3 shows the DATA RED front panel.

The block diagram for DATA RED is shown in Figure 4. The x array and y array raw data are input on the left of the diagram. The data points in the arrays with x values less than 1 A are removed using "threshold" and "subarray" functions. This was necessary for some testing routines where a voltage spike is recorded that corresponds to the initial positive step in the current level from the current supply. Next, the x and y arrays are passed to a "for" loop. This loop runs through each data point and sets any "y" points (sample voltages) that have an absolute value greater than 1 to a value of 1. This avoids problems with overflow data in the event of a sample quench. The x and y arrays are then passed to a larger "for" loop. The "for" loop executes from "I" values from 1 to N. If N is not specified, the loop proceeds until the end of the input arrays. The "for" loop is used to store a portion of the array. The number of data points is attached to N. We have multiplied the number of data points by 0.3, which takes 30% of the total data points and uses them for determining the baseline slope and intercept by a linear coefficients function.

The heavy-bordered box below the "for" loop is called a formula node. Light tabs on the formula node are inputs used on the right side of the equation in the formula node. Heavy tabs are outputs. In this node, the resistance R of the strand at I_C is calculated using the input resistivity criterion.

The large "for" loop calculates background-subtracted sample voltage values of the y array using the background subtraction and intercept values previously calculated. A two-point average for the voltage is used. A zero is input from the outside of the loop to average zero and the first data point. A comparison function of "greater than or equal?" is used to analyze the average and background-corrected y values (sample voltage) to the x values times the calculated resistance R. At current values below I_C, this comparison is false and the case structure box outputs an I_C as well as a calculated J_C, based on the input parameters in the formula node. At the real value of I_C, the comparison will be true, and I_C and J_C are no longer updated. The final values of I_C and J_C represent the real I_C and J_C of the sample. Occasionally noise in the sample voltage at low current can exceed the resistivity criterion. The above method of I_C determination outputs the highest value of current below the voltage at the resistivity criterion.

The "for" loop also contains functions that take a constant times the resistivity criterion voltage value of I times R. The values of 1 and 4 that are shown correspond to 1.0×10^{-11} and 4×10^{-11} Ω mm, respectively, or approximately 5–20 μV on samples with approximately 575-mm gauge length. These values are currently used for the sample voltage data range of the n value determination. In our data collection, we have found that ln I vs. ln V plots are linear from about 3×10^{-12} Ω mm to 7×10^{-11} Ω mm on SSC-type conductor at its specification magnetic field. A comparison function is used in the same manner as for the I_C determination, which ouputs the value of the current at the minimum and maximum of the n value determination range. True/false sequence structure boxes are set up so that when the sequence structure box is false (sample voltage is less than the resistivity criterion for the n value range), the present value of the current is sent out. When the sample voltage first exceeds the respective minimum or maximum range for the n value, the true sequence box sends that value of the current out for all remaining data points in the "for" loop. Then, outside of the "for" loop a network of array thresholding and subarray functions takes this portion of the data points (a subarray) and inputs them into a "for" loop, where the natural logarithm is calculated for both x and y values of each data point. This subarray is then sent to a linear coefficients function, and the slope determined is the sample's n value.

Front Panel

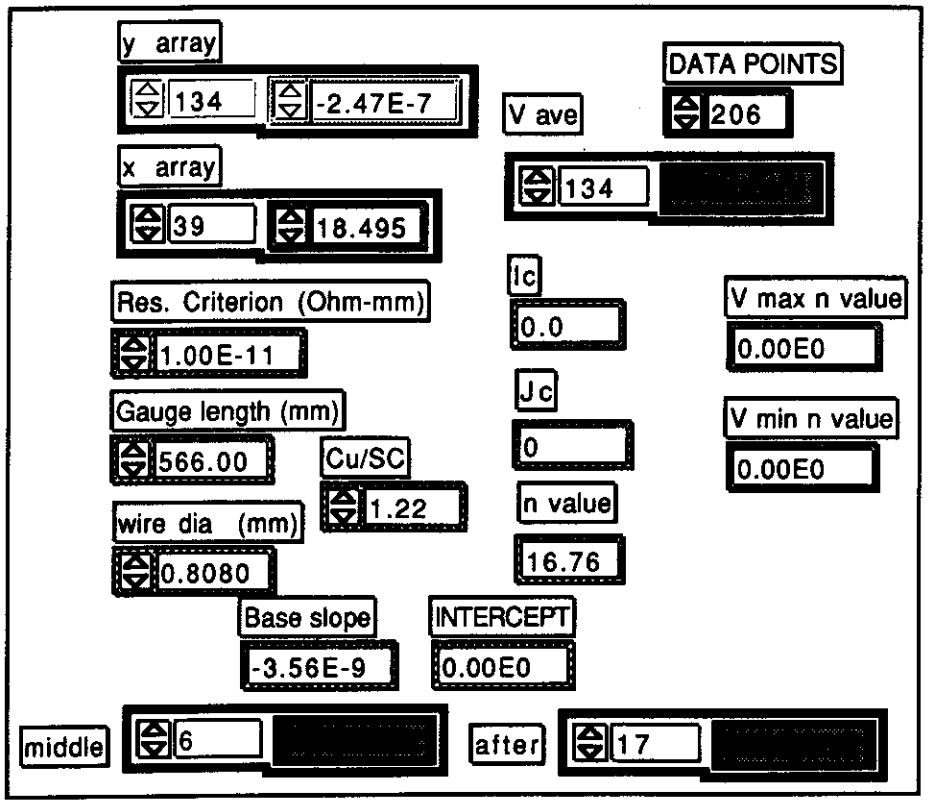

Figure 3. DATA RED Front Panel.

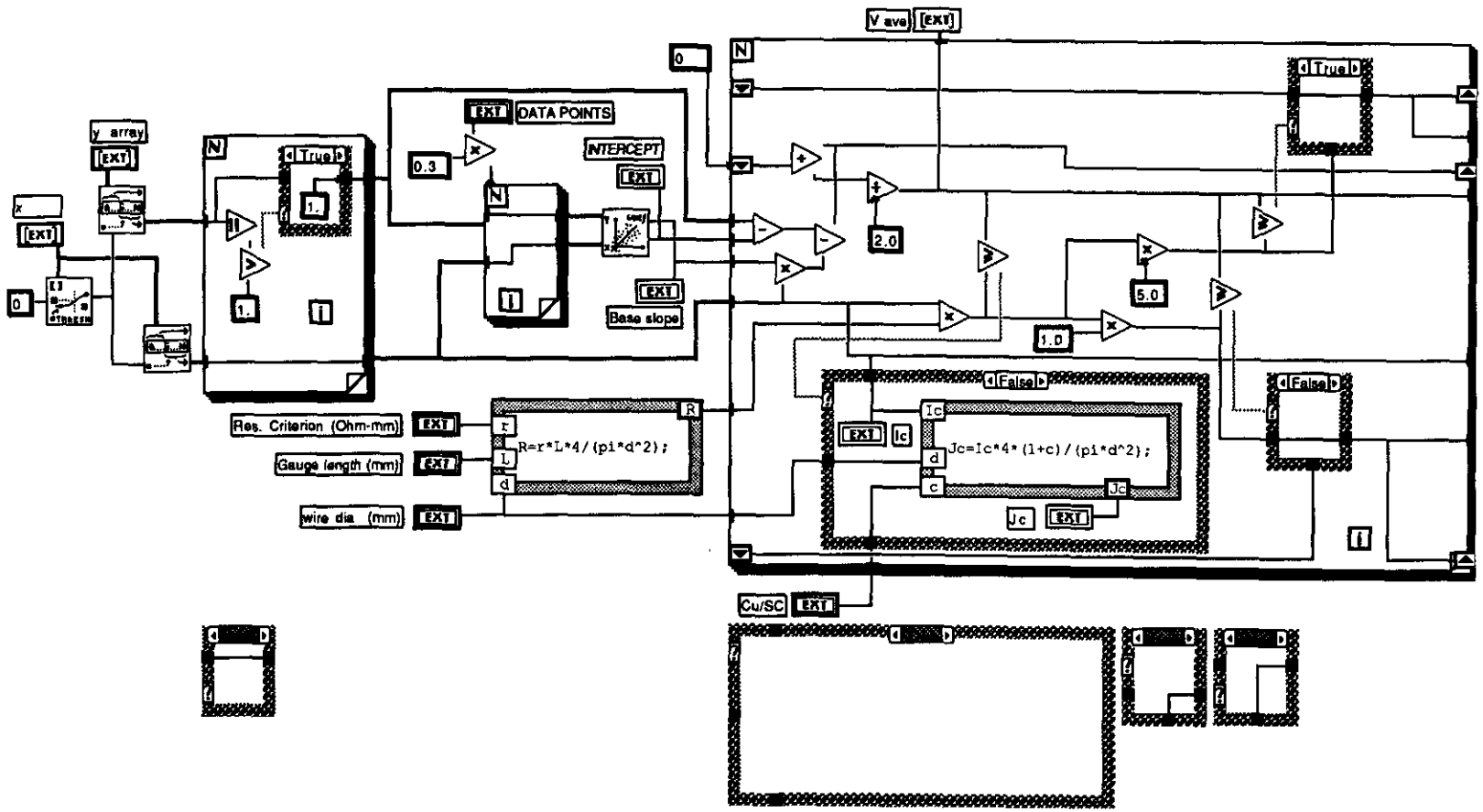

Figure 4. Block Diagram for DATA RED.

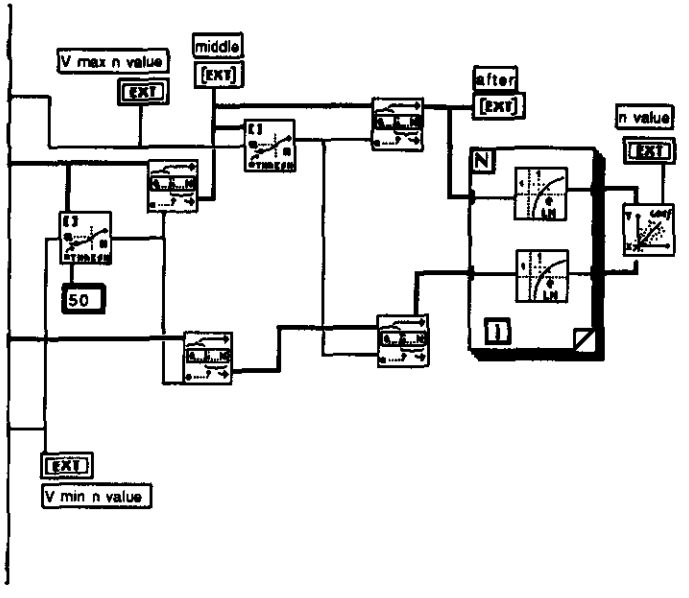

Figure 4. Block Diagram for DATA RED (continued).

4.0 OPERATION AND COMMENTS

The x and y format and precision of the digital displays, as well as the graph on the ICTEST front panel, are adjustable from the front panel. To run ICTEST, the operator ensures that the data collection switch is in the "on" position, and then clicks on the run arrow at the top of the VI. The data collection switch must be on, or else the ICTEST program will skip the data-collection part of its program.

The operator adjusts the sweep and rate and collects a V vs. I curve on the graph of the front panel. When the data collection is complete, the data collection switch is turned off. The power supply is then automatically set to zero amperes and data reduction begins. After a few seconds, I_C, J_C, and n values will appear, and the operator will be asked for the file name for the data.

It is suggested that the rate and sweeps are executed similarly for each test. For example, an inner sample with an I_C of around 375 A could be ramped at one rate to 300 A, at a second, slower rate to 350 A, and at a slowest rate to the desirable voltage above I_C. Such ramp routines are carried out by watching the current value on the graph of the digital readout on the front panel and clicking on the desired rate at the appropriate time. Standard ramping routines can be easily incorporated into the ICTEST block diagram for automatic operation. It is suggested that the operator change ramp rates by clicking on the desired ramp-rate level rather than on the slide control arrows. This will avoid inadvertent double clicks that can result in an improper rate-setting. The data collection can also be easily automated to stop at a fixed voltage (say 30 μV) if desired, instead of being manually stopped with the front panel switch.

The ICTEST VI has built-in features that help it cope with problematic data. These features are easily modified in their scale or their function by changing the block diagram. Different I_C hardware set-ups may require different handling of spikes associated with starting the ramp, a different fraction of the data points used for the background subtraction, or n value determination. These are easily changed by entering new constants into the block diagram. Samples that "quench" have one or more data points with an overflow for the sample voltage. (The Keithley meter sends a value of 1×10^7 for overflow.) These points are currently written into the raw data file but do not affect the DATA RED VI, since these points exceeded the range specified for background subtraction, I_C, or n values.

If the operator runs ICTEST with DATA RED also open in a background window, then the DATA RED routine steps can be tracked. The x and y values of any data point number can be viewed while or after DATA RED is running. The background subtraction slope and intercept, the averaged and background subtracted y array, the input parameters, the data point for the n value fitting range, and the calculated I_C, J_C, and n values can also be analyzed.

The ICTEST program can be easily modified into other versions for data collection. Almost any x vs. y data collection type that is related to analog voltages can be fed into voltmeters read by ICTEST. ICTEST can control the output of any device while collecting data. The data reduction can be easily modified to do other smoothing, background subtraction, and array processing. Either the raw data or processed data may be stored with or without data-reduction calculations. Stress vs. strain, temperature vs. time, resistance vs. temperature, or signal vs. position are some types of data collection that involve output voltages for x and y values that could be collected and analyzed with variations of ICTEST.

Please contact the authors about your experiences using this program. We wish to improve this program as needed and to redistribute new versions to anyone interested.

REFERENCES

- National Instruments Corporation, 6504 Bridge Point Parkway, Austin, TX 78730-5039; (512) 794-1000.
- National Institute of Standards and Testing (formerly National Bureau of Standards) NbTi Superconducting wire critical current sample documentation, Table 5.

U. S. Department of Commerce
Malcolm Baldrige
Secretary
National Bureau of Standards
Ernest Ambler, Director

National Bureau of Standards

Certificate

Standard Reference Material 1457

Superconducting Critical Current – NbTi Wire

This Standard Reference Material (SRM) is intended for use in checking the performance of measurement systems used in superconductor technology. This SRM consists of 2.2 m of a multifilamentary niobium titanium, copper stabilized superconducting wire wound in a single layer onto a spool with a core diameter of 8.7 cm. Critical current (I_c) for the SRM is certified over a range of magnetic fields, temperatures, and electric field criteria.

Measurement Technique: Adherence to the precautions given in this certificate (see section Precautions), together with the American Society for Testing and Materials (ASTM) Standard Test Method B714-82[1], is necessary and sufficient for a valid certification. Measurements for certifying SRM 1457 were obtained on a coil of diameter 3.18 cm with a voltage tap separation of 2 cm. The critical current is defined as the average of the values measured with increasing and decreasing current.

Certified Critical Currents: The certified critical currents in amperes at 4.2 K for an electric field criterion of 0.2 μV/cm are given in the table below. At respective magnetic fields, critical currents of this SRM can be calculated for temperatures from 3.90 to 4.24 K and electric field criteria from 0.05 to 0.2 μV/cm using:

$$I_c(T, E) = I_c(4.2, 0.2) \cdot \left\{\exp[A(4.2 - T) + B(4.2 - T)^2]\right\} \cdot [E/0.2]^C$$

where I_c (4.2, 0.2) and the coefficients A, B, and C are given in the table. Critical currents for SRM 1457 were derived from an empirical equation for the dependence of critical current on temperature (T) and electric field criterion (E):

$$\ln(I_c) = \ln(I_r) + A(T_r - T) + B(T_r - T)^2 + C \ln(E/E_r).$$

In this equation, $\ln(I_c)$ is the natural logarithm of the critical current and I_r is the critical current at the reference temperature, T_r, and reference electric field criterion, E_r. The experimental data at each magnetic field were fitted by a maximum likelihood procedure using a statistical model [2] that combines the empirical expression above with terms that allow for material variability (inhomogeneity) among the spools of wire.

Certified Value of Critical Current (I_c) at 4.2 K and 0.2 μV/cm and Coefficients for Temperature and Electric Field Extrapolation.

Magnetic Field (T)	Critical Current (A)	Total Uncertainty (%)	Coefficients for Extrapolation A	B	C
2.000	293.30*	±2.57	0.218625	−0.04755	0.0172089
4.000	187.38	±2.01	0.266361	−0.04682	0.0176600
6.000	124.72	±1.71	0.369479	−0.10488	0.0194218
8.000	69.72	±1.97	0.649242	−0.27906	0.0248311

*Extra digits are provided for accurate extrapolation.

Statistical design and data analysis were provided by D.F. Vecchia of the Statistical Engineering Division. Measurements for certification of SRM 1457 were coordinated by L.F. Goodrich. The measurements leading to the development and certification of SRM 1457 were performed by L.F. Goodrich, E.S. Pittman, and A.F. Clark of the Electromagnetic Technology Division.

The technical support aspects involved in the preparation, certification, and issuance of this Standard Reference Material were coordinated through the Office of Standard Reference Materials by R.K. Kirby.

Gaithersburg, MD 20899
June 19, 1984

Stanley D. Rasberry, Chief
Office of Standard Reference Materials

Interpretation of Uncertainty: The uncertainty of a certified critical current at each magnetic field is the sum of an estimated systematic error and statistical tolerance limits computed from the experimental data. The total uncertainty is expressed as percent error in I_c and does not change for extrapolated critical currents over the allowable range of temperatures and electric field criteria.

The statistical tolerance limits were constructed so that they should include 99 percent of the critical current measurements with probability 0.95. The resulting tolerance interval (and total uncertainty) is valid for a single measurement on any given spool that is made as directed on a coil of diameter 3.18 cm with a voltage tap separation of 2 cm.

Precautions:

1) This SRM should be carefully handled and stored to protect it against physical damage such as: excessive bending, scraping, and other deformation. Any excessive physical damage will invalidate the certification.
2) On each spool, the twisted wire ends and an additional 2 cm on each end of the spool core should be discarded. These sections of the wire are not certified.
3) This certification is invalidated if this SRM is mechanically cycled by demounting and remounting on a specimen holder. Mechanical cycling can concentrate handling stress, which would lower I_c in the stressed regions of the conductor.
4) This certificate is based on a slow cooling of the specimen mounted on a G-11 tube (circumferential fiber direction) by gas heat exchange with a liquid nitrogen precooled Dewar [2]. For a valid certification, the specimen must be measured on a suitable specimen holder [1]. The effect of a rapid cooling by immersion into liquid nitrogen or liquid helium can change I_c owing to dynamic differential thermal contraction. For rapid (immersive) cooling, 0.25% must be added to the total uncertainty even if a suitable specimen holder is used. It is conceivable that a user could demonstrate that the particular system and technique employed does not have a cumulative thermal or mechanical cycling effect. In this case, the specimen still has utility, but this SRM cannot be certified beyond one thermal cycle.
5) This certification is only valid for a zero-to-I_c ramp time in the range of 30 to 300 seconds for all magnetic fields [2]. Also, the certification was based on the assumption that voltage filtering and instrumentation response times contribute negligible error to the measured value of I_c. A nonnegligible effect can be removed by averaging the I_c values measured with increasing and decreasing current at a constant ramp rate. A nonnegligible effect must be removed for a valid certification.
6) A chemical wire stripping compound should be used to remove the insulation from this SRM. A phenol/methylene chloride wire stripping compound was found to adequately remove this insulation.
7) If the specimen temperature exceeds 250 °C, the certification is invalidated. The current and voltage contacts should be soldered carefully to avoid overheating and physical damage. If a specimen enters the normal state (quenches) while carrying a high current density, it could melt within a few seconds. An adequate quench protection circuit may be necessary [1]. A typical current shutdown time of 10 ms is adequate.
8) For a voltage tap separation of more than 2 cm, the uncertainty in I_c should be less. For a voltage tap separation of less than 2 cm, the uncertainty in I_c may be more. This certification is only valid for a voltage tap separation greater than or equal to 2 cm.
9) If this SRM is measured with a bend diameter other than 3.23 cm (coil of diameter 3.18 cm), the results may be different. Uniaxial strain data was used to determined the expected upper limits to the bending strain effect. For bending diameters from infinity (straight) to 1.6 cm, the certified critical current values can be used only if the following amount is added to the total uncertainty:

$$G \cdot \left| 1 - (3.23/d)^2 \right|,$$

where d is the bend diameter in centimeters and G=1.10, 1.20, 1.36, and 1.70% at 2, 4, 6, and 8 T, respectively.

Noncertified Values at Other Criteria: Critical current measurements were made on the sample spools at electric field criteria 0.02 and 0.5 μV/cm. However, SRM 1457 is not certified to the extended range of electric field because measurements at the additional criteria did not conform to the required measurement procedure. A comparison of observed critical currents to values extrapolated from the certifying equation is given in reference 2 for information only. Most of the measurements were within the range computed using tolerance limits that are only valid between 0.05 and 0.2 μV/cm.

References:

1. Standard Test Method for D-C Critical Current of Composite Superconductors, Annual Book of ASTM Standards, ASTM B714-82, Part 2.03, pp. 595-98, American Society for Testing and Materials, Philadelphia, Pa. (1983).
2. Goodrich, L.F., Vecchia, D.F., Pittman, E.S., Ekin, J.W., and Clark, A.F., Critical Current Measurements on an NbTi Superconducting Wire Standard Reference Material, NBS Special Publication 260-91 (1984).

NBS SPECIAL PUBLICATION **260-91**

U.S. DEPARTMENT OF COMMERCE, National Bureau of Standards

Standard Reference Materials:

Critical Current Measurements on an NbTi Superconducting Wire Standard Reference Material

Table 5 (Continued)

Temperature (K)	Magnetic Field (T)	Electric Field Criterion (μV/cm) 0.05	0.10	0.20	Total Uncertainty (%)
4.03	2	296.82	300.38	303.99	2.57
	4	191.06	193.41	195.79	2.01
	6	128.89	130.63	132.40	1.71
	8	74.62	75.91	77.23	1.97
4.04	2	296.22	299.77	303.37	2.57
	4	190.58	192.93	195.30	2.01
	6	128.45	130.20	131.96	1.71
	8	74.20	75.49	76.80	1.97
4.05	2	295.62	299.16	302.75	2.57
	4	190.10	192.44	194.81	2.01
	6	128.02	129.76	131.52	1.71
	8	73.79	75.07	76.37	1.97
4.06	2	295.01	298.55	302.13	2.57
	4	189.62	191.96	194.32	2.01
	6	127.59	129.32	131.07	1.71
	8	73.37	74.64	75.94	1.97
4.07	2	294.41	297.94	301.51	2.57
	4	189.14	191.47	193.83	2.01
	6	127.15	128.88	130.63	1.71
	8	72.95	74.21	75.50	1.97
4.08	2	293.80	297.32	300.89	2.57
	4	188.66	190.98	193.34	2.01
	6	126.72	128.44	130.18	1.71
	8	72.53	73.79	75.07	1.97
4.09	2	293.19	296.71	300.27	2.57
	4	188.18	190.50	192.84	2.01
	6	126.28	127.99	129.73	1.71
	8	72.10	73.36	74.63	1.97
4.10	2	292.58	296.09	299.64	2.57
	4	187.70	190.01	192.35	2.01
	6	125.84	127.55	129.28	1.71
	8	71.68	72.92	74.19	1.97
4.11	2	291.96	295.47	299.01	2.57
	4	187.21	189.52	191.85	2.01
	6	125.41	127.10	128.83	1.71
	8	71.25	72.49	73.75	1.97
4.12	2	291.35	294.85	298.38	2.57
	4	186.73	189.03	191.36	2.01
	6	124.97	126.66	128.38	1.71
	8	70.83	72.05	73.31	1.97
4.13	2	290.73	294.22	297.75	2.57
	4	186.25	188.54	190.86	2.01
	6	124.52	126.21	127.92	1.71
	8	70.40	71.62	72.86	1.97
4.14	2	290.12	293.60	297.12	2.57
	4	185.76	188.05	190.37	2.01
	6	124.08	125.76	127.47	1.71
	8	69.97	71.18	72.42	1.97
4.15	2	289.50	292.97	296.49	2.57
	4	185.28	187.56	189.87	2.01
	6	123.64	125.31	127.01	1.71
	8	69.53	70.74	71.97	1.97

Table 5 (Continued)

Temperature (K)	Magnetic Field (T)	Electric Field Criterion (μV/cm) 0.05	0.10	0.20	Total Uncertainty (%)
4.16	2	288.88	292.35	295.85	2.57
	4	184.79	187.07	189.37	2.01
	6	123.19	124.86	126.56	1.71
	8	69.10	70.30	71.52	1.97
4.17	2	288.26	291.72	295.22	2.57
	4	184.31	186.58	188.88	2.01
	6	122.75	124.41	126.10	1.71
	8	68.67	69.86	71.07	1.97
4.18	2	287.64	291.09	294.58	2.57
	4	183.82	186.09	188.38	2.01
	6	122.30	123.96	125.64	1.71
	8	68.23	69.42	70.62	1.97
4.19	2	287.01	290.46	293.94	2.57
	4	183.34	185.59	187.88	2.01
	6	121.85	123.51	125.18	1.71
	8	67.80	68.97	70.17	1.97
4.20	2	286.39	289.82	293.30	2.57
	4	182.85	185.10	187.38	2.01
	6	121.41	123.05	124.72	1.71
	8	67.36	68.53	69.72	1.97
4.21	2	285.76	289.19	292.66	2.57
	4	182.36	184.61	186.88	2.01
	6	120.96	122.60	124.26 96.765	1.71
	8	66.92	68.08	69.27	1.97
4.22	2	285.13	288.55	292.01	2.57
	4	181.87	184.11	186.38	2.01
	6	120.51	122.14	123.80 96.07	1.71
	8	66.48	67.64	68.81	1.97
4.23	2	284.50	287.92	291.37	2.57
	4	181.39	183.62	185.88	2.01
	6	120.06	121.68	123.33	1.71
	8	66.04	67.19	68.36	1.97
4.24	2	283.87	287.28	290.72	2.57
	4	180.90	183.12	185.38	2.01
	6	119.61	121.23	122.87	1.71
	8	65.60	66.74	67.90	1.97

7.5 Critical Temperature and Exponents

If $\hat{\beta}_1$, $\hat{\beta}_2$, and $\hat{\beta}_3$ denote estimates of the parameters, and $S(\hat{\beta}_1)$, $S(\hat{\beta}_2)$ and $S(\hat{\beta}_3)$ are computed standard errors of the estimates, then n and T_c^* can be estimated by the equations:

$$\hat{n} = \hat{\beta}_3^{-1}, \quad S(\hat{n}) = S(\hat{\beta}_3)/\hat{\beta}_3^{2}$$

and

$$\hat{T}_c^* = T_r + \frac{w_1\hat{\beta}_1^{-1} + w_2(-2\hat{\beta}_2^{-2})}{w_1 + w_2}, \quad s(\hat{T}_c^*) = (w_1 + w_2)^{-\frac{1}{2}} \tag{19}$$