SSCL-N-787

SSCL-N-787

Superconducting Super Collider Laboratory

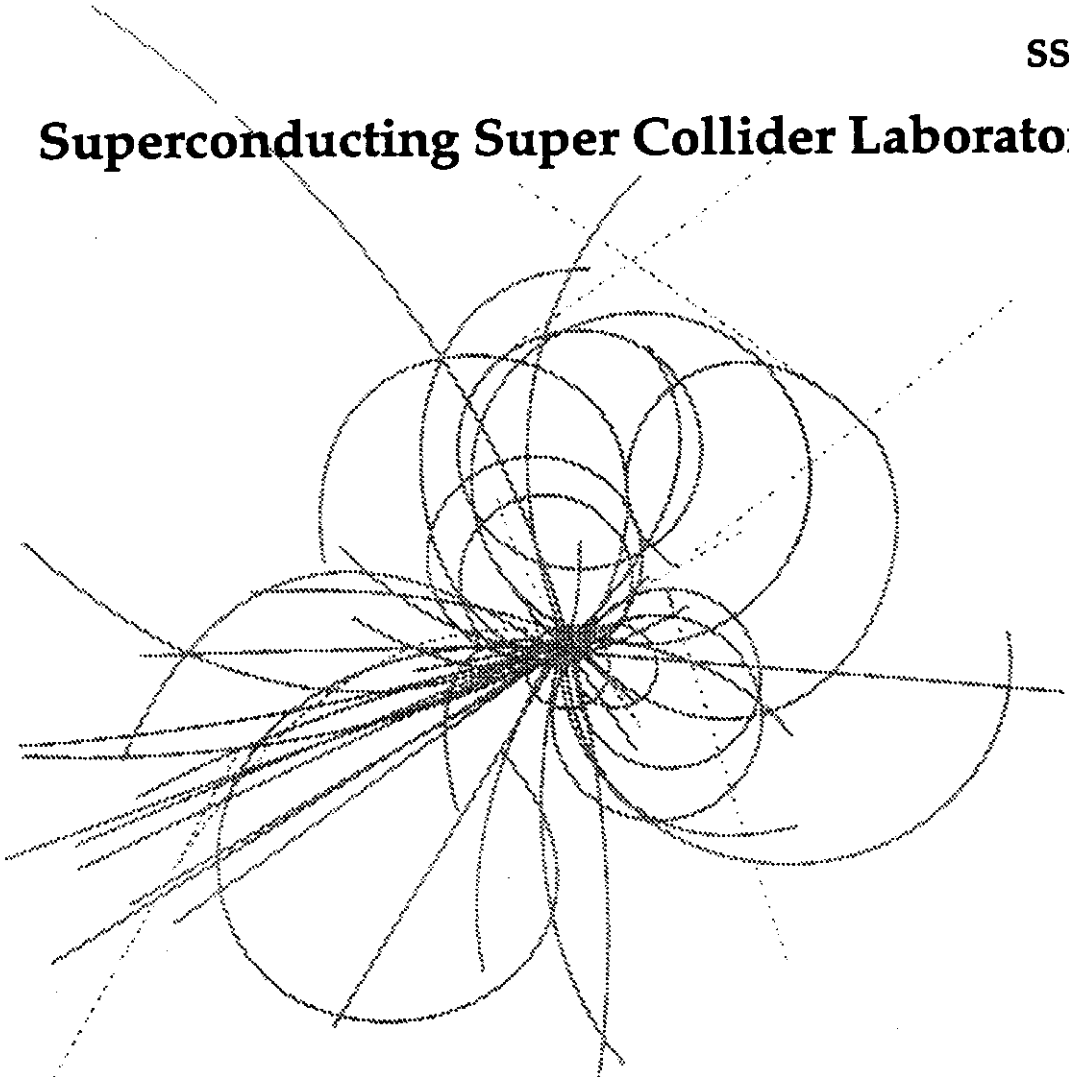

Preliminary Evaluation of AD640 Logamp Detector for BPM Electronics

G. R. Aiello and M. R. Mills

February 1992

For Internal Use Only

SSCL-N-787

Preliminary Evaluation of AD640 Logamp Detector for BPM Electronics

G. R. Aiello and M. R. Mills

Superconducting Super Collider Laboratory†
2550 Beckleymeade Ave.
Dallas, TX 75237

February 1992

†Operated by the Universities Research Association, Inc., for the U.S. Department of Energy under Contract No. DE-AC35-89ER40486.

Preliminary Evaluation of AD640 Logamp Detector for BPM Electronics

G. R. Aiello and M. R. Mills

1.0 Introduction

The purpose of this note is to present a preliminary evaluation of the AD640 integrated circuit from Analog Devices [1], for Beam Position Monitor detector electronics. The chip is a logarithmic detector: it furnishes a DC output proportional to the logarithm of the input signal amplitude. The AD640 operates from DC to 120 MHz input signal.

The main characteristics evaluated are:

- linearity error
- dynamic range
- noise figure
- burst response
- frequency response
- stability
- channel matching
- temperature drift

The parameters used in this evaluation are those of the LEB [2], but they are still quite general, most of them are common for all the SSC machines.

TABLE 1. Parameters used in the evaluation

beam pipe radius	$b = 50$ mm
stripline length	$l = 150$ mm
stripline angle	$\theta = 70°$
sensitivity	$S_x = 0.72$ dB/mm
cable length	$L = 100$ m
cable attenuation	Att = 7 dB
proton per bunch	$N = 2x10^8 - 5x10^{10}$
beam current	$I_b = 1.5$ mA - 480 mA
bunch length (1σ)	$\sigma = 1$ ns
input power	$V_{in} = -45$ dBm, +10 dBm
input frequency	$f = 47.5$ MHz - 60 MHz
bandwidth	BW = 2 MHz

3.0 Detector scheme

The principle scheme of detection is shown in figure 2. The band pass filter selects only the main RF component; the logamp circuit gives a DC output proportional to the logarithm of the input signal amplitude; the low pass filter optimizes the signal to noise ratio; the outputs from the difference and summing circuits are functions of the beam position, the digitizer provides a number which is proportional to the beam position.

FIGURE 2. Principle scheme of detection.

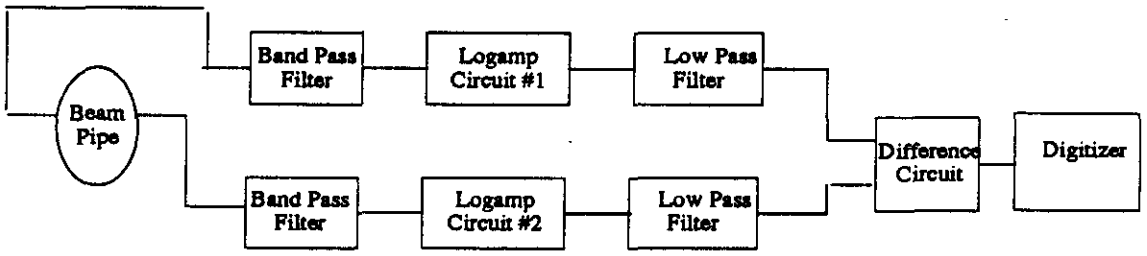

The input signal from the striplines is simulated using a signal generator operating at 60 MHz, with the amplitude ranging from 0 dBm to -80 dBm. No band pass filter is used. Two different values of the low pass filter are used: 2 MHz or 100 KHz. The difference circuit gain used is 10. A 12 bit ADC board and a digital voltmeter provide the digital output.

FIGURE 3. Circuit schematics.

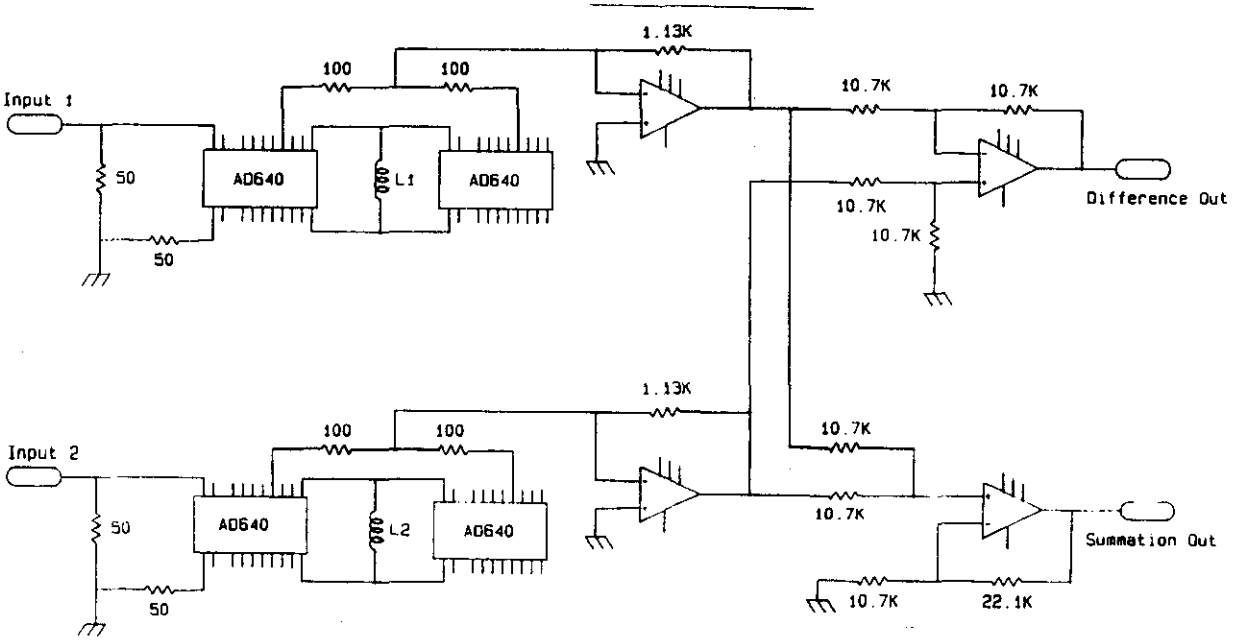

The basic circuit schematic is shown in figure 3. Two AD640 integrated circuits are cascaded, and their current outputs are converted into a single voltage. Operational amplifier circuits provide a difference and sum from the two channels. The summing circuit is used to correct the channels mismatch with a software procedure explained in chapter 7.0.

The digital voltmeter measures the output voltage of the channel. The "logamp circuit" in this case is one of the two channels shown in figure 3, consisting of two cascaded AD640 and the current to voltage converter.

The circuit linearity error vs. the input power is shown in figure 5. The linearity error is defined as the error, in percent, between the channel response and the best straight line fit. The error is less than 0.5% over 50 dB of input power and better than 1% over 65 dB of input power.

The consequence of this error can be seen on the plot in figure 7. The instrumentation setup used to make this measurement is shown in figure 6. The same signal generator is driving both channels. Two variable attenuators provide a programmable power ratio between the two channels.

FIGURE 6. Simulated beam fluctuation measurement setup.

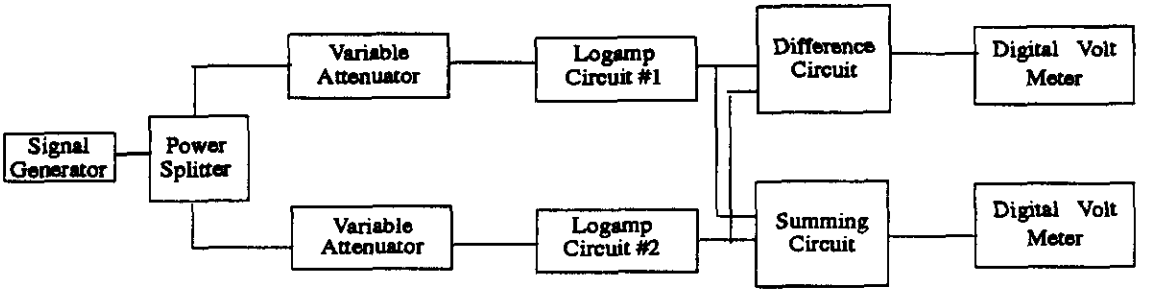

When the attenuators have the same value, the centered beam is simulated; when the attenuators have different values, the off center beam is simulated, the position being related to the input power ratio by the sensitivity S_x.

The signal generator power is ramped from 0 dBm to -70 dBm, simulating different beam currents. Many measurements are taken in 1 dB steps. This correspond to 1.4 mm steps according to the sensitivity value shown in table 1.

The position is calculated in the following way:

$$x = \frac{1}{S_x} \times 20\log\left(\frac{A}{B}\right) = \frac{1}{S_x} \times \Delta V \qquad \text{(EQ 4)}$$

where A and B are the stripline potentials, S_x [dB/mm] is the sensitivity, and ΔV [dB] is the ratio between the two inputs.

Taking care of the electronics:

$$x = \frac{1}{S_x} \times \frac{1}{g_{LA}} \times \frac{1}{g_\Delta} \times V_{out} \qquad \text{(EQ 5)}$$

where g_{LA} [V/dB] is the logamp gain, defined as the ratio between the output voltage and the input power, g_Δ is the differencing amplifier gain, and V_{out} [V] is the output from the differencing amplifier.

Two measurements, for the beam on center and for the beam off center respectively, are shown in figure 8 and 9. They both have a fluctuation due to the linearity error and a slope due to the mismatch between the two channels. The largest fluctuation amplitude is present when the power ratio between the channels is 10 dB. This is due to the AD640 internal structure: each of the five stages has 10 dB of gain.

The slope visible on the plot is due to the mismatch of the two channels. A software matching procedure is described in paragraph 7.0. The amplitude fluctuation due to the linearity error is more clearly visible in figure 16 and 17.

The good working region, shown in figures 7,8, and 9, corresponds to 55 dB of dynamic range.

FIGURE 9. Beam off center.

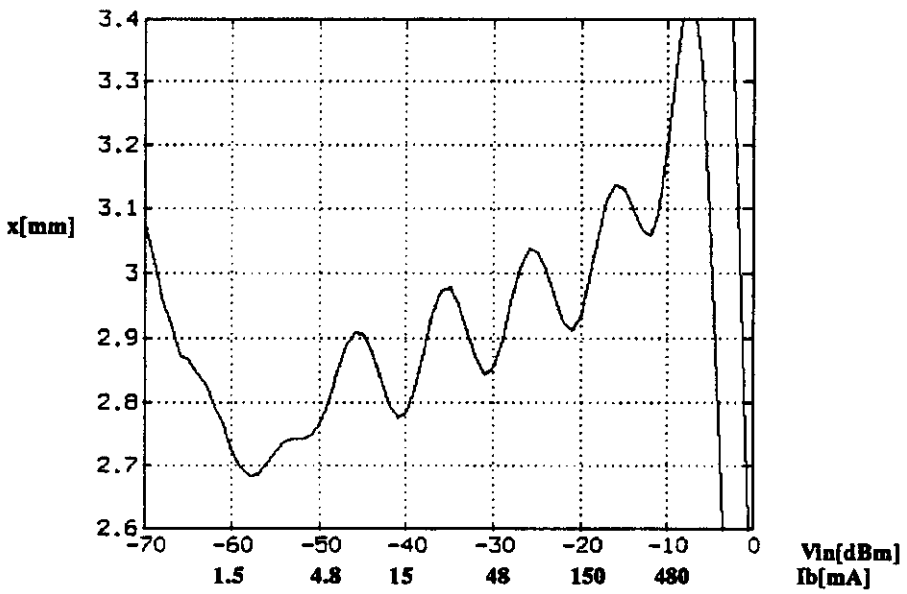

5.0 Noise measurement

The signal to noise ratio due to the thermal noise and to the electronics sets a limit on the measurement resolution [3]. The resolution due to the signal to noise ratio is:

$$\delta x = \frac{b}{2\sqrt{2}}\sqrt{\frac{P_N}{P_S}} \qquad \text{(EQ 7)}$$

with P_S and P_N in Watt, or:

$$\delta x = \frac{b}{2\sqrt{2}}10^{\left(\frac{P_N - P_S}{20}\right)} \qquad \text{(EQ 8)}$$

FIGURE 11. Noise measurement with BW=2 MHz.

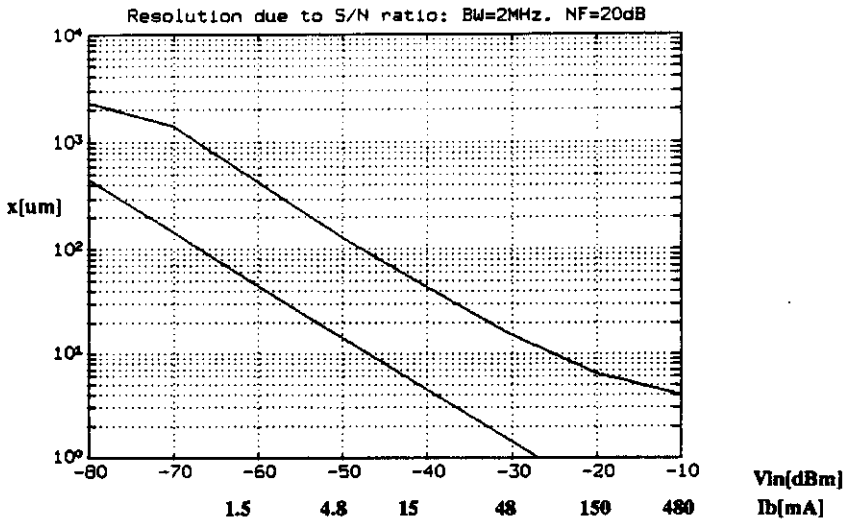

Figure 12 refers to a measurement made using both the RF voltmeter and the ADC, with a 100 KHz low pass filter. The noise figure measured in this case is 16 dB.

FIGURE 12. Noise measurement with BW=100 KHz.

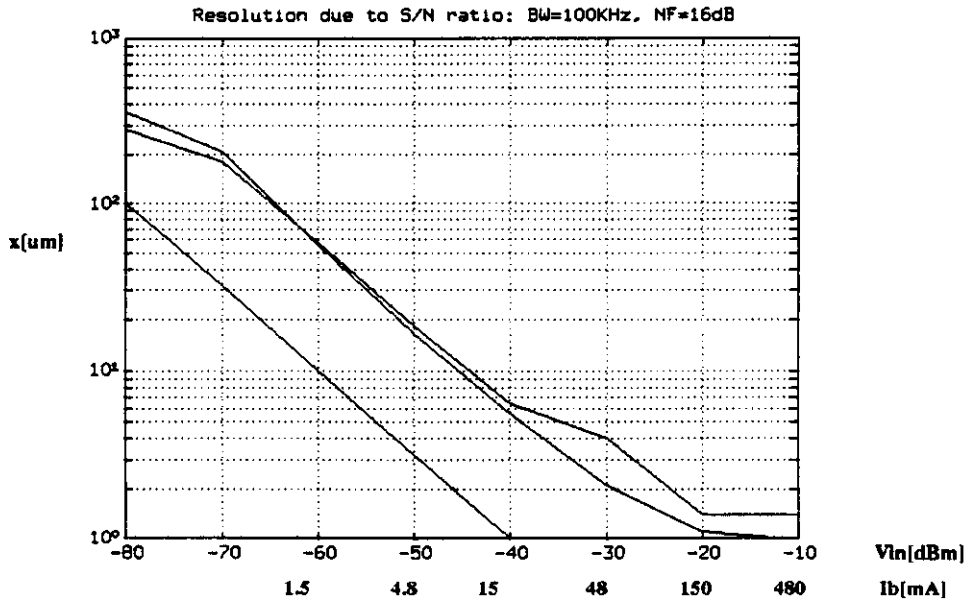

A good agreement between the two different measurements can be seen in figure 12.

7.0 Stability and matching

No special attempt has been made to match the channels: all the components used in the circuit are "off the shelf". The tilt in the plot of figure 8 and 9 can be reduced with a better choice of the circuit components. An alternative is a software correction which account for the different gain and offset of the two channels. This procedure requires the use of both the difference and sum information, and the measurement of all the circuit parameters: logamp gain and intercept, differencing and summing gain and offset.

The position calculated should be:

$$x = \frac{1}{S_x} \times 20\log\left(\frac{A}{B}\right) = \frac{1}{S_x} \times 20\left(\log(A) - \log(B)\right) \qquad \text{(EQ 10)}$$

with A and B representing the input power from the electrodes. The two channels really give:

$$V_A = g_A \times 20\log(A) + \delta_A; \ldots\ldots\ldots V_B = g_B \times 20\log(B) + \delta_B \qquad \text{(EQ 11)}$$

with g_A and g_B representing the gain, and δ_A and δ_B representing the offset. The calculated position is:

$$x = \frac{1}{S_x} \times \left(\frac{V_A - \delta_A}{g_A} - \frac{V_B - \delta_B}{g_B}\right) \qquad \text{(EQ 12)}$$

The difference and the sum from the two channels are:

$$\Delta = V_A - V_B; \ldots\ldots\ldots \Sigma = V_A + V_B \qquad \text{(EQ 13)}$$

so we can express V_A and V_B in term of difference and sum:

$$V_A = \frac{\Sigma + \Delta}{2}; \ldots\ldots\ldots V_B = \frac{\Sigma - \Delta}{2} \qquad \text{(EQ 14)}$$

The position can be expressed in terms of difference and sum in the following way:

$$x = \frac{1}{S_x} \times \left(\frac{\frac{\Sigma + \Delta}{2} - \delta_A}{g_A} - \frac{\frac{\Sigma - \Delta}{2} - \delta_B}{g_B}\right) \qquad \text{(EQ 15)}$$

The real difference and sum electronics also have a gain and offset:

$$\Delta_m = g_\Delta \Delta + \delta_\Delta; \ldots\ldots\ldots\ldots \Sigma_m = g_\Sigma \Sigma + \delta_\Sigma \qquad \text{(EQ 16)}$$

with g_Δ and g_Σ representing the gain, and δ_Δ and δ_Σ representing the offset;

FIGURE 16. Beam on center.

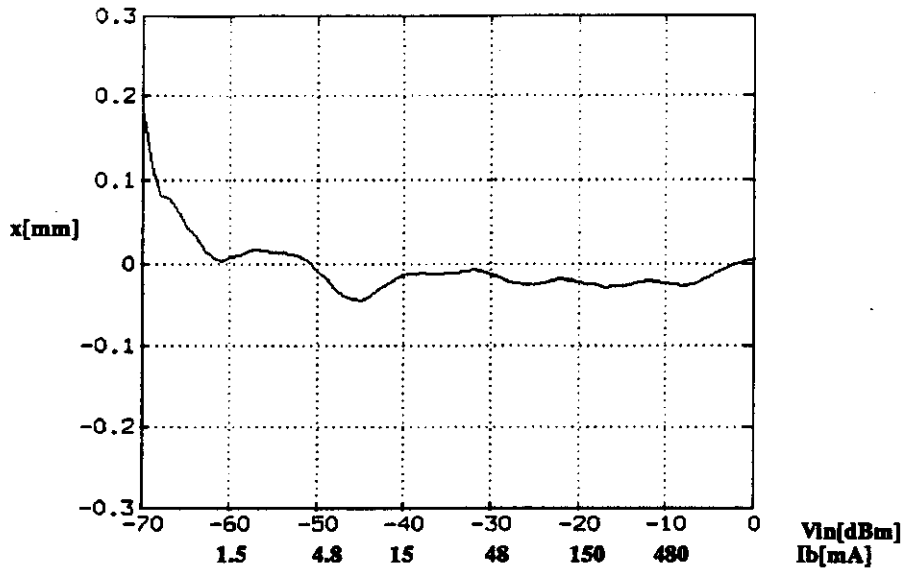

FIGURE 17. Beam off center.

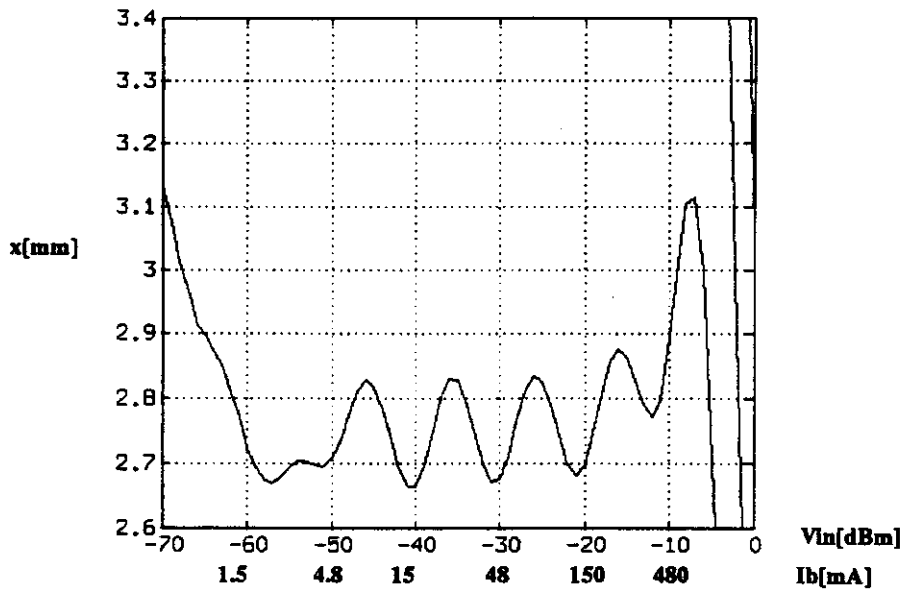

No special test has been done in order to measure the circuit parameters stability, but the same slope and intercept have been measured in 5 months of testing.

The measurement setup used is shown in figure 6. The signal generator is set at a fixed output power, and the frequency is sweeped from 47 MHz to 60 MHz. Many measurements are taken using different values for the variable attenuators, simulating different beam positions. The position is calculated using (EQ 18). The results are shown in figure 18.

FIGURE 20. Corrected frequency fluctuation.

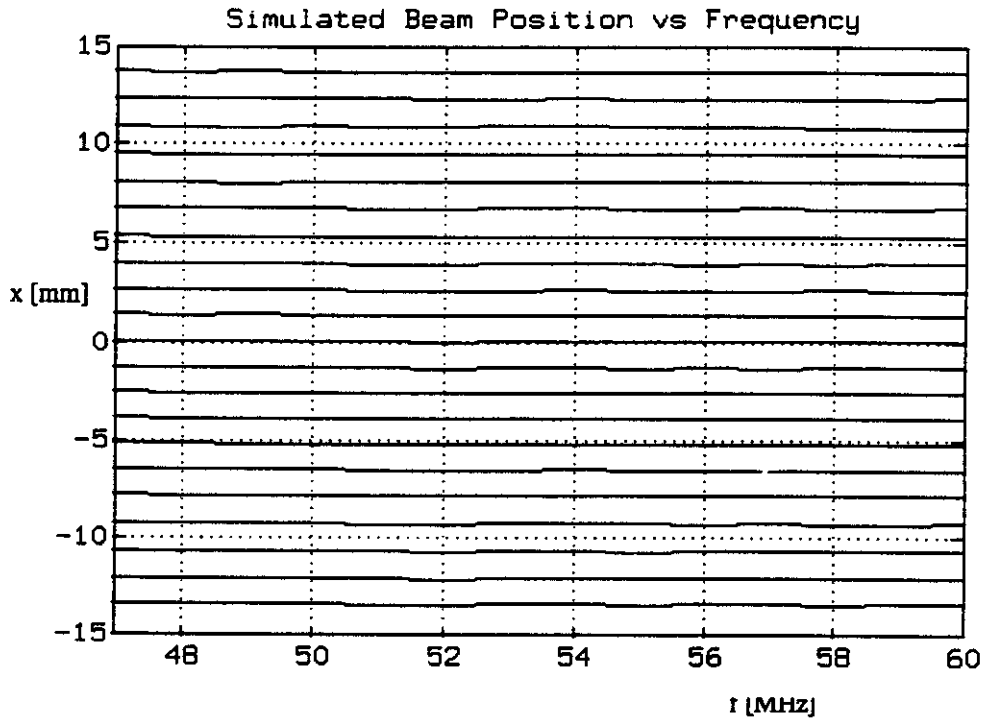

The lines are not straight because the gains of the channels are not constant with frequency. The plot is tilted because the two gains don't change in the same way. If the two channels tracked perfectly, the lines would not be straight, but symmetric to the center line. In this case there would be no error for the beam on center line, and an error for all the other lines. The tracking can be improved by a better matching of the two channels.

The measurements taken with the same value on the programmable attenuators, which corresponds to the on center beam, is shown in figure 19. This data indicate a less than 0.2 mm drift when the frequency is sweeped from 47 MHz to 60 MHz.

The fluctuation due to the change in gain and offset, visible in figure 18, can be corrected with an appropriate calibration. Different values for the offset and gain parameters in (EQ 18) must be used with a changing input frequency. The corrected plot, using this correction, is shown in figure 20. The on center beam plot is shown in figure 21.

The fluctuation for the on center beam and for the off the center beam, up to 14 mm as well, is less than 0.1 mm.

Some circuit modifications have been considered in order to improve the performance shown in these preliminary tests, these include:

- use a better choice for the circuit components in order to improve channel matching
- build a better layout to slightly increase the dynamic range and reduce the noise

An interesting idea to reduce the fluctuation due to the circuit linearity error, shown in figure 15, is to use two pair of cascaded AD640s per channel, all of them contributing to the same current to voltage converter. Both the cascaded pairs would get the same input signal, with one pair being attenuated by 5 dB. This would reduce the fluctuation amplitude due to the 10 dB gain in the circuit internal stages.

10.0 Conclusion

The results from this preliminary evaluation are encouraging. The performance shown in this note is better than previous versions [4]. The dynamic range and the fluctuation due to the linearity error fit the requirements for all the SSC injectors at transfer lines, and for some applications on the Collider; the frequency response produces less than 0.1 mm drift in the measured position, which is acceptable for the LEB; the stability, burst response, channel matching, all look good, but more measurements are required; the temperature drift has not been measured yet.

More measurements will be performed in order to get a better understanding of the circuit and a final evaluation will be made. A prototype will be built in the next months, in order to test the circuit and understand the performances in the presence of digital electronics (ADCs, memory, digital control).

11.0 Acknowledgments

Many people contributed to this preliminary evaluation: Pat Evans helped in the circuit board construction, Dave Beechy for many useful discussions, Phil Datte helped in writing the control software, Bob Webber with his constant support, and Barrie Gilbert from Analog Devices in giving several useful suggestions.

12.0 References

1. Analog Devices "Linear Products Databook", pp. 7.7-7.22, 1990/91.
2. G.R.Aiello, "Calculated Signal Level From LEB BPM", SSCL-N-754, April 1991.
3. R.Shafer, "Beam Position Monitoring", pp. 26-58, AIP Conference Proceedings 212, 1989.
4. F.D.Wells, J.D.Gilpatrick, R.E.Shafer, "Log-ratio Circuit For Beam Position Monitoring", pp. 1139-1141, 1991 IEEE Particle Accelerator Conference.

Disclaimer Notice

This report was prepared as an account of work sponsored by an agency of the United States Government. Neither the United States Government or any agency thereof, nor any of their employees, makes any warranty, express or implied, or assumes any legal liability or responsibility for the accuracy, completeness, or usefulness of any information, apparatus, product, or process disclosed, or represents that its use would not infringe privately owned rights. Reference herein to any specific commercial product, process, or service by trade name, trademark, manufacturer, or otherwise, does not necessarily constitute or imply its endorsement, recommendation, or favoring by the United States Government or any agency thereof. The views and opinions of authors expressed herein do not necessarily state or reflect those of the United States Government or any agency thereof.

Superconducting Super Collider Laboratory is an equal opportunity employer.