SSCL-N-740

SPREADSHEET PROGRAMS FOR STUDY OF COLLIDER INJECTOR SEQUENCE*

M. Syphers, B. Valant, J. Warren

Superconducting Super Collider Laboratory†
2550 Beckleymeade Ave.
Dallas, TX 75237

October 1990

*Presented at the 1990 Linear Accelerator Conference, Albuquerque, NM, September 10–14, 1990.

†Operated by the Universities Research Association, Inc., for the U.S. Department of Energy under Contract No. DE-AC02-89ER40486.

Spreadsheet Programs for Study of Collider Injector Sequence

M. J. Syphers, B. L. Valant,
and
J. L. Warren

October 25, 1990

Two programs have been developed simultaneously over the past several months to study certain aspects of the Collider injector sequence. Both programs were written for the Microsoft Excel spreadsheet program, one on an IBM PC, the other on a Macintosh.

The program described first was written to look at the filling sequence for the Collider. This program uses as input kicker rise times and the number of times one machine is used to fill the next machine. The program then calculates harmonic numbers (assuming a 5 m bunch spacing), injector circumferences, and the fraction of filled buckets in each machine. One can then study the effects of the kicker rise times and harmonic numbers on the percentage of filling.

The second program was written with some of the same questions in mind. In this program, the circumferences, energies, and kicker times for the various injectors are the input parameters. The total number of cycles necessary to fill the next machine and the number of bunches transmitted to the next machine are calculated. In addition, the program calculates cycle times for the machines and therefore a total fill time for the Collider. For this part of the program, the user must input transition energies for the injectors, average rates of energy gain for the MEB and HEB, and an allowable momentum offset for cogging purposes. One can then study the effects of various lattice designs, repetition rates, and kicker times on fill fractions and fill times.

The two programs are individually described by the authors on the following pages.

Use of a Spreadsheet Program to Study the Filling Sequence for the Collider

John L. Warren
90JUL26

Summary

The main factor limiting the filling of the collider to about 92% is the injection kicker risetimes for the boosters. The harmonic numbers for the LEB and MEB may change before the final design for accelerator physics reasons. The effect of risetimes and harmonic numbers on percentage of filling can be studied using a spread sheet program, such as EXCEL. This note summarizes the basic equations and gives examples of spreadsheet output. The spreadsheet file, which I call FILSEQ, can also be used for exploring percentage fill as a function of the number of turns to fill the booster rings.

Basic Equations

The bunch separation is Sb = 5 meters. The circumference of a booster ring is Sb*h, where h is the harmonic number. One must leave a gap in the sequence of bunches injected into a ring in order to accomodate the risetime of the injector kicker. The number of missing bunches I is given by the relation

I = Roundup(Tr*beta*c/Sb)

where Tr is the risetime of the injection kicker, and beta*c is the velocity of the bunches. Roundup means taking the next highest integer.

The filling sequence is described by the set of equations for the harmonic numbers

hL = 1*FL + (IM - 0)

hM = NL*hL + (IH - IM)

hH = NM*hM + (IC - IH)

hC = NH*hH + (IA -IC)

where NL is the number of cycles of the LEB needed to fill the MEB, etc. The differences in parentheses are needed to compensate for the increasing size of the injector gaps as one moves up the chain. The quantity FL is the number of filled buckets in the LEB, and IA is the gap required to inject into the Collider Abort System. Figure 1 illustrates the equations for the LEB and the MEB.

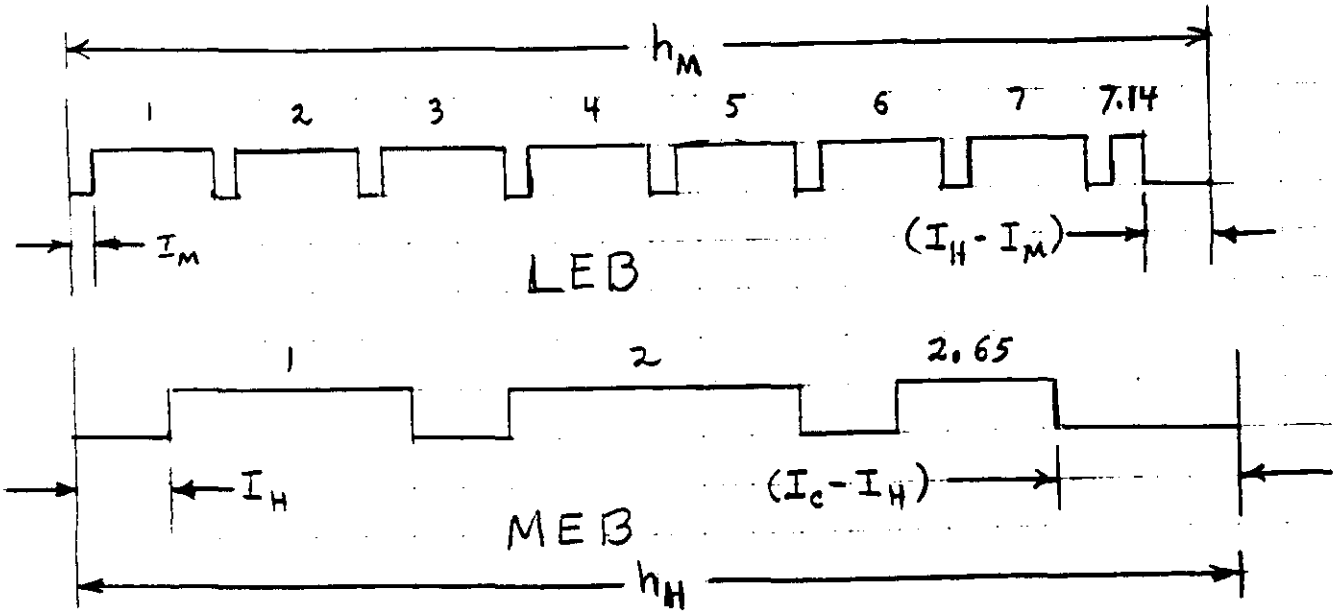

Fig. 1 Filling sequences for LEB and MEB
The drawings are not to scale.

If one substitutes one equation into another the result is

$$hC = NH*NM*NL*FL + NH*NM*(NL-1)IM + NH(NM-1)IH + (NH-1)IC + IA$$

The fill factor is the ratio

$$F = NH*NM*NL*FL/hC$$

If one adds all the equations together and solves for hC, the result is

$$hC = (NH-1)hH + (NM-1)hM + (NL-1)hL + FL + IA.$$

With hC fixed by the circumference of the collider, this equation puts a constraint on the other harmonic numbers and on numbers of cycles to fill each ring.

Since hC, FL and IA are integers, it would be nice if the N*h products were also integers. If the N's are not integers, again it would be nice if they were rational numbers that can be written

$$N = n/d,$$

such that the denominator d is a factor of the harmonic number h. Thus we have the relations

$$N*h = n/d * h = n*a, \quad \text{where } h = d*a.$$

One can now play numerology games to choose the "most flexible" harmonic numbers. (See for example SSCL N-716 [July 1989] by Steve Peggs.) This will not be done here.

The kinematic analysis of the rings given the SCDR has limited accuracy. I have used fairly exact numbers for the speed of light and the mass of the proton and repeated the analysis to give momenta, energies, gammas, (1 - beta)'s, et cetra. These are presented at the top of each spreadsheet.

Spreadsheet Output

Spreadsheet 1 is the "Base Case" corresponding to assumptions outlined in the SCDR (June 1990), pp 185-7. The input numbers to the program are those numbers appearing in the shaded rectangles and are optimistic regarding the kicker risetimes. Note that NL and NM are rational numbers (257/36, 17491/6600), but NH is irrational. The denominator of NL is a divisor of hL, but the denominator of NM is not a divisor of hM.

Spreadsheet 2 uses the risetimes given in Table 4.2.4.5-1 on page 467 of the SCDR (6/90). Note that one must change the number-of-cycles-to-fill slightly in order to keep the harmonic numbers unchanged.

Spreadsheet 3 shows the effect of a very optimistic choice of risetimes. One can see that little is to be gained by working hard to decrease the risetimes.

Spreadsheet 4 examines the effect of increasing the harmonic number of the LEB and MEB while keeping the harmonic number of the collider fixed. An 8.3% increase in FL results in a 2.3% increase in the fill factor of the collider.

Spreadsheet 5 examines the effect of decreasing the harmonic number of the LEB and MEB. (For reliability reasons, one might want to raise the transition-gamma of the LEB to avoid possible longitudinal emmittance growth at the end of the acceleration cycle. This could lead to stronger focusing and a decrease in ring size.)

Spreadsheet 6 is an example of varying NL, NM and NH to see what effect they have on the circumferences of the rings. The sizes of the rings should be choosen based on accelerator physics, not on numerology, hence no conclusions can be drawn from this sheet, other than that the fill factor is insensitive to such variations.

	A	B	C	D	E	F	G
1	File: FILSEQ1						
2	90SEP09						
3	JLW	FILLING SEQUENCE FOR THE COLLIDER					
4		Spreadsheet 1. Basic Case (SCDR)					
5		Constants					
6	c=	0.299792458	Gm/s				
7	m=	0.93827231	GeV				
8	Bunch Spacing Sb=	5	m				
9							
10		LINAC	LEB	MEB	HEB	COL	DUMP
11	Injection momentum (GeV/c)Pi=	0	1.2189655	12	200	2000	20000
12	Extract. momentum (GeV/c) Pe=	1.21896562	12	200	2000	20000	0
13	Extraction gamma	1.639456025	12.8284992	213.16008	2131.57758	21315.7735	1
14	Extraction kinetic energy (GeV	0.599983881	11.0983533	199.063929	1999.06195	19999.0617	0
15	Extraction beta	0.792433424	0.99695716	0.999989	0.99999989	1	0
16	1.0-Extraction beta	0.207566576	0.00304284	1.1004E-05	1.1004E-07	1.1004E-09	
17	Ext. Bunch period (ns) Tb=	21.04682143	16.7291088	16.6783883	16.6782066	16.6782048	.
18	Ext. Bunch Frequency (MHz) Fb=	47.51311277	59.7760473	59.9578318	59.958485	59.9584915	
19	Inj. Bunch Period (ns)		21.0468214	16.7291088	16.6783883	16.6782066	16.6782048
20	Inj. Bunch Freq (MHz)		47.5131128	59.7760473	59.9578318	59.958485	59.9584915
21							
22							
23			LEB	MEB	HEB	COLLIDER	ABORT
24	Kicker rise time (ns)		0	47	400	1700	2400
25	Ratio risetime /bunch period		0	2.80947422	23.9831327	101.929425	143.90038
26	gap (buckets)		0	3	24	102	144
27	Number of fills	1	7.13888889	2.65151515	7.98071625	1	
28	Number of filled buckets		105	749.583333	1987.53157	15861.9255	15861.9255
29	Added buckets		3	21	78	42	
30	Harmonic number h=	105	108	792	2178	17424	
31	Percent Fill		97.22%	94.64%	91.25%	91.03%	
32	Circumference (m)		540	3960	10890	87120	
33	Present Circumference		540	3960	10890	87120	
34	Cir. minus Pres. Cir.		0	-4.8E-09	-1.333E-08	-3.761E-05	
35							
36	kicker flattops (us)		1.75655643	12.8090022	34.6239569	288.199378	

	A	B	C	D	E	F	G
1	File: FILSEQ2						
2	90SEP09						
3	JLW	FILLING SEQUENCE FOR THE COLLIDER					
4		Spreadsheet 2. Risetimes from SCDR Table 4.2.4.5-1					
5		Constants					
6	c=	0.299792458	Gm/s				
7	m=	0.93827231	GeV				
8	Bunch Spacing Sb=	5	m				
9							
10		LINAC	LEB	MEB	HEB	COL	DUMP
11	Injection momentum (GeV/c)Pi=	0	1.2189655	12	200	2000	20000
12	Extract. momentum (GeV/c) Pe=	1.21896562	12	200	2000	20000	0
13	Extraction gamma	1.639456025	12.8284992	213.16008	2131.57758	21315.7735	1
14	Extraction kinetic energy (GeV	0.599983881	11.0983533	199.063929	1999.06195	19999.0617	0
15	Extraction beta	0.792433424	0.99695716	0.999989	0.99999989	1	0
16	1.0-Extraction beta	0.207566576	0.00304284	1.1004E-05	1.1004E-07	1.1004E-09	
17	Ext. Bunch period (ns) Tb=	21.04682143	16.7291088	16.6783883	16.6782066	16.6782048	.
18	Ext. Bunch Frequency (MHz) Fb=	47.51311277	59.7760473	59.9578318	59.958485	59.9584915	
19	Inj. Bunch Period (ns)		21.0468214	16.7291088	16.6783883	16.6782066	16.6782048
20	Inj. Bunch Freq (MHz)		47.5131128	59.7760473	59.9578318	59.958485	59.9584915
21							
22							
23			LEB	MEB	HEB	COLLIDER	ABORT
24	Kicker rise time (ns)		0	47	500	1700	3000
25	Ratio risetime /bunch period		0	2.80947422	29.9789159	101.929425	179.875475
26	gap (buckets)		0	3	30	102	180
27	Number of fills	1	7.08333333	2.65909091	7.96418733	1	
28	Number of filled buckets		105	743.75	1977.69886	15750.7642	15750.7642
29	Added buckets		3	27	72	78	
30	Harmonic number h=	105	108	792	2178	17424	
31	Percent Fill		97.22%	93.91%	90.80%	90.40%	
32	Circumference (m)		540	3960	10890	87120	
33	Present Circumference		540	3960	10890	87120	
34	Cir. minus Pres. Cir.		0	-1.8E-06	-1.186E-06	1.4252E-05	
35							
36	kicker flattops (us)		1.75655643	12.7089319	34.6239569	287.598963	

	A	B	C	D	E	F	G
1	File: FILSEQ3						
2	90SEP09						
3	JLW	FILLING SEQUENCE FOR THE COLLIDER					
4		Spreadsheet 3. Optimistic Choice of Risetimes					
5		Constants					
6	c=	0.299792458	Gm/s				
7	m=	0.93827231	GeV				
8	*Bunch Spacing Sb=*	5	*m*				
9							
10		LINAC	LEB	MEB	HEB	COL	DUMP
11	Injection momentum (GeV/c)Pi=	0	1.2189655	12	200	2000	20000
12	Extract. momentum (GeV/c) Pe=	1.21896562	12	200	2000	20000	0
13	Extraction gamma	1.639456025	12.8284992	213.16008	2131.57758	21315.7735	1
14	Extraction kinetic energy (GeV	0.599983881	11.0983533	199.063929	1999.06195	19999.0617	0
15	Extraction beta	0.792433424	0.99695716	0.999989	0.99999989	1	0
16	1.0-Extraction beta	0.207566576	0.00304284	1.1004E-05	1.1004E-07	1.1004E-09	
17	Ext. Bunch period (ns) Tb=	21.04682143	16.7291088	16.6783883	16.6782066	16.6782048	.
18	Ext. Bunch Frequency (MHz) Fb=	47.51311277	59.7760473	59.9578318	59.958485	59.9584915	
19	Inj. Bunch Period (ns)		21.0468214	16.7291088	16.6783883	16.6782066	16.6782048
20	Inj. Bunch Freq (MHz)		47.5131128	59.7760473	59.9578318	59.958485	59.9584915
21							
22							
23			LEB	MEB	HEB	COLLIDER	ABORT
24	Kicker rise time (ns)		0	33	400	1500	2000
25	Ratio risetime /bunch period		0	1.97260956	23.9831327	89.9377275	119.916983
26	gap (buckets)		0	2	24	90	120
27	Number of fills	1	7.19626168	2.66666667	7.98622589	1	
28	Number of filled buckets		105	755.607476	2014.95327	16091.872	16091.872
29	Added buckets		2	22	66	30	
30	Harmonic number h=	105	107	792	2178	17424	
31	Percent Fill		98.13%	95.40%	92.51%	92.35%	
32	Circumference (m)		535	3960	10890	87120	
33	Present Circumference		540	3960	10890	87120	
34	Cir. minus Pres. Cir.		-5	-1.2E-06	1E-05	2.1962E-05	
35							
36	kicker flattops (us)		1.75655643	12.8090022	34.8240954	288.599656	

	A	B	C	D	E	F	G
1	File: FILSEQ4						
2	90SEP09						
3	JLW	FILLING SEQUENCE FOR THE COLLIDER					
4		Spreadsheet 4. Increase LEB Harmonic Number					
5		Constants					
6	c=	0.299792458	Gm/s				
7	m=	0.93827231	GeV				
8	Bunch Spacing Sb=	5	m				
9							
10		LINAC	LEB	MEB	HEB	COL	DUMP
11	Injection momentum (GeV/c)Pi=	0	1.2189655	12	200	2000	20000
12	Extract. momentum (GeV/c) Pe=	1.21896562	12	200	2000	20000	0
13	Extraction gamma	1.639456025	12.8284992	213.16008	2131.57758	21315.7735	1
14	Extraction kinetic energy (GeV	0.599983881	11.0983533	199.063929	1999.06195	19999.0617	0
15	Extraction beta	0.792433424	0.99695716	0.999989	0.99999989	1	0
16	1.0-Extraction beta	0.207566576	0.00304284	1.1004E-05	1.1004E-07	1.1004E-09	
17	Ext. Bunch period (ns) Tb=	21.04682143	16.7291088	16.6783883	16.6782066	16.6782048	.
18	Ext. Bunch Frequency (MHz) Fb=	47.51311277	59.7760473	59.9578318	59.958485	59.9584915	
19	Inj. Bunch Period (ns)		21.0468214	16.7291088	16.6783883	16.6782066	16.6782048
20	Inj. Bunch Freq (MHz)		47.5131128	59.7760473	59.9578318	59.958485	59.9584915
21							
22							
23			LEB	MEB	HEB	COLLIDER	ABORT
24	Kicker rise time (ns)		0	43	400	1700	2400
25	Ratio risetime /bunch period		0	2.57037003	23.9831327	101.929425	143.90038
26	gap (buckets)		0	3	24	102	144
27	Number of fills	1	7	2.439025	7.980714	1	
28	Number of filled buckets		117	819	1997.56148	15941.9668	15941.9668
29	Added buckets		3	21	78	42	
30	Harmonic number h=	117	120	861	2178.00053	17423.9993	
31	Percent Fill		97.50%	95.12%	91.72%	91.49%	
32	Circumference (m)		600	4305	10890.0026	87119.9964	
33	Present Circumference		540	3960	10890	87120	
34	Cir. minus Pres. Cir.		60	345	0.002625	-0.0035906	
35							
36	kicker flattops (us)		1.95730573	13.959811	34.6239656	288.199367	

	A	B	C	D	E	F	G
1	File: FILSEQ5						
2	90SEP09						
3	JLW	FILLING SEQUENCE FOR THE COLLIDER					
4		Spreadsheet 5. Decrease LEB Harmonic Number					
5		Constants					
6	c=	0.299792458	Gm/s				
7	m=	0.93827231	GeV				
8	Bunch Spacing Sb=	5	m				
9							
10		LINAC	LEB	MEB	HEB	COL	DUMP
11	Injection momentum (GeV/c)Pi=	0	1.2189655	12	200	2000	20000
12	Extract. momentum (GeV/c) Pe=	1.21896562	12	200	2000	20000	0
13	Extraction gamma	1.639456025	12.8284992	213.16008	2131.57758	21315.7735	1
14	Extraction kinetic energy (GeV	0.599983881	11.0983533	199.063929	1999.06195	19999.0617	0
15	Extraction beta	0.792433424	0.99695716	0.999989	0.99999989	1	0
16	1.0-Extraction beta	0.207566576	0.00304284	1.1004E-05	1.1004E-07	1.1004E-09	
17	Ext. Bunch period (ns) Tb=	21.04682143	16.7291088	16.6783883	16.6782066	16.6782048	.
18	Ext. Bunch Frequency (MHz) Fb=	47.51311277	59.7760473	59.9578318	59.958485	59.9584915	
19	Inj. Bunch Period (ns)		21.0468214	16.7291088	16.6783883	16.6782066	16.6782048
20	Inj. Bunch Freq (MHz)		47.5131128	59.7760473	59.9578318	59.958485	59.9584915
21							
22							
23			LEB	MEB	HEB	COLLIDER	ABORT
24	Kicker rise time (ns)		0	43	400	1700	2400
25	Ratio risetime /bunch period		0	2.57037003	23.9831327	101.929425	143.90038
26	gap (buckets)		0	3	24	102	144
27	Number of fills	1	7.09090909	2.904563	7.98072	1	
28	Number of filled buckets		96	680.727273	1977.21525	15779.6013	15779.6013
29	Added buckets		3	21	78	42	
30	Harmonic number h=	96	99	723	2177.99905	17424.0006	
31	Percent Fill		96.97%	94.15%	90.78%	90.56%	
32	Circumference (m)		495	3615	10889.9952	87120.0028	
33	Present Circumference		540	3960	10890	87120	
34	Cir. minus Pres. Cir.		-45	-345	-0.0047563	0.00284125	
35							
36	kicker flattops (us)		1.60599445	11.6581934	34.623941	288.199388	

	A	B	C	D	E	F	G
1	File: FILSEQ6						
2	90SEP09						
3	JLW	FILLING SEQUENCE FOR THE COLLIDER					
4		Spreadsheet 6. Changing the Number of Fills					
5		Constants					
6	c=	0.299792458	Gm/s				
7	m=	0.93827231	GeV				
8	Bunch Spacing Sb=	5	m				
9							
10		LINAC	LEB	MEB	HEB	COL	DUMP
11	Injection momentum (GeV/c)Pi=	0	1.2189655	12	200	2000	20000
12	Extract. momentum (GeV/c) Pe=	1.21896562	12	200	2000	20000	0
13	Extraction gamma	1.639456025	12.8284992	213.16008	2131.57758	21315.7735	1
14	Extraction kinetic energy (GeV	0.599983881	11.0983533	199.063929	1999.06195	19999.0617	0
15	Extraction beta	0.792433424	0.99695716	0.999989	0.99999989	1	0
16	1.0-Extraction beta	0.207566576	0.00304284	1.1004E-05	1.1004E-07	1.1004E-09	
17	Ext. Bunch period (ns) Tb=	21.04682143	16.7291088	16.6783883	16.6782066	16.6782048	.
18	Ext. Bunch Frequency (MHz) Fb=	47.51311277	59.7760473	59.9578318	59.958485	59.9584915	
19	Inj. Bunch Period (ns)		21.0468214	16.7291088	16.6783883	16.6782066	16.6782048
20	Inj. Bunch Freq (MHz)		47.5131128	59.7760473	59.9578318	59.958485	59.9584915
21							
22							
23			LEB	MEB	HEB	COLLIDER	ABORT
24	Kicker rise time (ns)		0	43	400	1700	2400
25	Ratio risetime /bunch period		0	2.57037003	23.9831327	101.929425	143.90038
26	gap (buckets)		0	3	24	102	144
27	Number of fills	1	8	2.3333333	8	1	
28	Number of filled buckets		105	840	1959.99997	15679.9998	15679.9998
29	Added buckets		3	21	78	42	
30	Harmonic number h=	105	108	885	2142.99997	17185.9998	
31	Percent Fill		97.22%	94.92%	91.46%	91.24%	
32	Circumference (m)		540	4425	10714.9999	85929.9988	
33	Present Circumference		540	3960	10890	87120	
34	Cir. minus Pres. Cir.		0	465	-175.00015	-1190.0012	
35							
36	kicker flattops (us)		1.75655643	14.3600923	34.0402192	284.229962	

A Spreadsheet Program for Injector Parameters Development

M. J. Syphers and B. L. Valant

October 30, 1990

Abstract

A spreadsheet program for performing certain calculations related to the development of injector accelerator parameters is described. The program was written using EXCEL on the Macintosh. By inputing parameters such as machine circumferences, kicker times, etc., the program calculates filling sequences, fill fractions, cycle times, and other important injector quantities.

1 Program Description

The program is written in Microsoft EXCEL and runs on the Macintosh. To run, open the folder labelled Injectors Spreadsheets and double click on Fill Workspace. This will load the Fill Spreadsheet and Denom Macro into EXCEL. The spreadsheet has columns for LEB, MEB, HEB, and Collider; the far right column contains symbols for the quantities in the first column which are also used in the formulae described below.

The program is initialized with all cells locked except those which are intended to be input parameters (those shaded in Fig. 1). There is no password for this protection and thus can be disabled by selecting Unprotect Document under the Options Menu.

Obviously there are many possible scenarios for filling and transfering beam from one injector to another. This spreadsheet assumes that beam is transfered from one machine to the next by having a number of cycles with total fills and at most one cycle with a partially filled machine. The number of cycles is determined by the circumference ratios, the kicker times, and an arbitrary assumption that a partial-fill cycle would only occur if the machine were at least 33% filled with beam. Of course, this criterion can easily be changed by the user. The cogging times calculated assume that the revolution frequency of the lower energy machine is altered by changing the momentum of the beam by an amount $\Delta p/p$, input by the user. The time calculated is the maximum time to cog based upon the circumference ratio of the two machines.

The next section describes the assumptions and formulae used in the spreadsheet.

2 Formulae

The following parameters are intended to be input parameters:

- Circumferences.
- Energy.
- Kicker times – Extraction kicker time for the machine; is also used as the injection kicker time for the next machine.
- Transition Gamma – can be real or imaginary; to input an imaginary γ_t, simply input the number as negative ("-24" means "24i").
- Momentum offset – used for calculating cogging time.
- Average rate of energy gain – used for calculating ramp times.

Using the symbols found in the far right column of the spreadsheet (Column G), the expressions used in the spreadsheet cells are:

- $h = C/(5m)$
- $L_k = T_k \cdot v$, (v = speed of light)
- $R_c = (C_n/C_{n-1}) - INT(C_n/C_{n-1})$, where $INT(x)$ is the integer part of x.
- $R =$ the denominator of the reduced fraction C_n/C_{n-1}; e.g., if $C_n = 10890$ and $C_{n-1} = 3960$, then $C_n/C_{n-1} = 10890/3960 = 11/4$ and so $R_n = 4$. This operation is performed by the "Denom" macro.
- $dR = R_c - L_k/C$
- $U = \left\{ \begin{array}{ll} dR, & if \quad dR \geq 0 \\ 1 + dR, & if \quad dR < 0 \end{array} \right\}$
- $B = \left\{ \begin{array}{ll} INT(C_n/C_{n-1}), & if \quad dR \geq 0 \\ INT(C_n/C_{n-1}) - 1, & if \quad dR < 0 \end{array} \right\}$
- $P = \left\{ \begin{array}{ll} 1, & if \quad U > 1/3 \\ 0, & if \quad U \leq 1/3 \end{array} \right\}$
- $S = B + P$

- $b_n = B_{n-1} \cdot b_{n-1} + P_{n-1} \cdot INT(U_n \cdot b_{n-1})$
- $\eta = \frac{1}{\gamma_i^2} - \frac{1}{\gamma^2}$, where $\gamma = E/mc^2$
- $(T_f)_n = T_{n-1}(S_{n-1} - 1)$
- $(T_a)_n = (E_n - E_{n-1})/\langle dE/dt \rangle_n$
- $(T_c)_n = \frac{C_n}{2R_{n+1}|\eta|_n(\Delta p/p)v} + \frac{C_{n+1}}{v} \cdot (R_{n+1} - 1)$
- $(T_i)_{meb} = \frac{1}{2}(T_a)_{meb}$
- $(T_i)_{heb} = (T_a)_{heb}$
- $T = T_f + T_a + T_c + T_i$
- $F = b/h$
- Total Fill Time $= (2S_{heb} - 1) \cdot (T_{heb} + 2.5sec)$

3 Other Notes

- The frequency for the LEB has been initially set to 10 Hz; i.e., $T_{leb} = 0.1$ sec.
- A cogging time for the LEB is calculated and displayed, assuming one cogs at most half of one LEB bucket: $(T_c)_{leb} = \left(\frac{C}{2h|\eta(\Delta p/p)|v}\right)_{leb}$.
- The total number of bunches delivered from the LEB is determined entirely by the extraction kicker time: $b_{leb} = INT[h_{leb}(1 - (L_k)_{leb}/C_{leb})]$.
- In calculating a Total Fill Time, a 2.5 sec period is assumed for switching the polarity of the HEB.

	A	B	C	D	E	F	G
1			Collider Fill Time			BLV 8/16/90	
2							
3		LEB	MEB	HEB	Collider		Symbol
4	Circumference	540	3960	10890	87120	meters	C
5	Number of buckets	108	792	2178	17424		h
6	Energy	12.0	200.0	2000.0	20000.0	GeV	E
7	Kicker time	0.047	0.4	1.7	2.4	µseconds	Tk
8	Kicker equivalent length	14	120	510	720	meters	Lk
9	Kicker equivalent bunches	3	24	102	144		
10	Circumference Ratio		7.333	2.750	8.000		Cn/Cn-1
11	Circumference Remainder		0.33	0.75	0.00		Rc
12	Remainder Denominator		3	4	1		R
13	(Remainder)-(Kicker time)		0.303	0.703	-0.008		dR
14	Useful Remainder		0.303	0.703	0.992		U
15	Number of full batches	7	2	7			B
16	Number of partial fills	0	1	1			P
17	Total number of cycles	7	3	8			S
18	No. bunches from full batch	105	735	1470	13902		
19	No. bunches from partial fill		0	516	1969		
20	Total number of bunches	105	735	1986	15871		b
21	Transition gamma	14	16	39			gamma-t
22	Slip factor at extraction	-0.0010	0.0039	0.0007			eta
23	Momentum offset	3	3	3		E-3	dp/p
24	Average rate of energy gain		140	35		GeV/sec	<dE/dt>
25	Fill time		0.600	5.512	823.020	seconds	Tf
26	Acceleration time		1.343	51.429		seconds	Ta
27	Cogging time	0.003	0.142	9.205		seconds	Tc
28	Invert time		0.671	51.429		seconds	Ti
29	Total Cycle time	0.1	2.756	117.574		seconds	T
30	Fill fraction	97.22	92.80	91.18	91.09	percent	F
31					Total Fill Time:		
32					0:30:01 (hr:min:sec)		