SSCL-N-732

Scintillator Calorimeter Support Structural Design and Evaluation

F. Ayer
C. Elder

The Charles Stark Draper Laboratory, Inc.
Cambridge, MA

31 May 1990

Table of Contents

	Acknowledgements	2
1	**Introduction, Objective and Summary**	3
2	**Design Concept Considerations**	4
3	**Calorimeter Assembly Procedure**	9
	3.1 The Modular Ring Method	9
	3.2 The Shell & Sector Method	22
	3.3 Assembly Procedure Issues and Tolerances	26
4	**Structural Support Design Description**	30
5	**Finite Element Model and Analysis Results**	35
	5.1 Finite Element Model	35
	5.2 Response to Gravity Loading	37
	5.3 Response to Longitudinal 0.1g Acceleration (+ Gravity Loading)	42
	5.4 Tower Support Issues and Local Effects	42
6	**Technical Issues and Further Developments**	44
	6.1 Tower Casting Concepts and Tolerances	44
	6.2 Calorimeter Construction Issues	45
	6.3 Design Finalization and Optimization	46
	6.4 Local Structural Problems	46

List of Figures

Figure 1	Structural Support System Design Parameters and Issues	6
Figure 2	Suggested Structural Support System Configuration Side View and Center Support Frame	7
Figure 3	Suggested Structural Support Configuration End Support Frame	8
Figure 4	Structural System Design Variables and Constraints Interactions	10
Figure 5	Tower Feature	11
Figure 6	Sheath to Sheath Attachment Cone Inner End	12
Figure 7	Modular Ring Calorimeter	14
Figure 8	Two Ring Modules and Tower Attachment Detail	15
Figure 9	Tower Support - Inboard Ring Module	16
Figure 10	Ring Module in Cradle	16
Figure 11	Rail Support Scheme	17
Figure 12	Module Adjustment System	18
Figure 13	Rail Layout	20
Figure 14	Tower Support Outbound Module	21
Figure 15	Shell & Sector Tower Support Method	24
Figure 16	Tower to Shell Interface	25
Figure 17	Calorimeter Halves in Open Position	31
Figure 18	Circular Rings and Longitudinal Reinforcements Cross-Section	33

Scintillator Calorimeter Support

Structural Design and Evaluation

F. Ayer
C. Elder

The Charles Stark Draper Laboratory, Inc.
Cambridge, MA

31 May 1990

Acknowledgement

This report was prepared by the Charles Stark Draper Laboratory, Inc. for Mr. Tim Thurston of the Superconducting Super Collider Laboratory Physics Research Department under a letter of intent dated 2 May 1990.

The authors wish to thank L. Sulak and T. Coan of Boston University for their valuable assistance in describing the calorimeter.

The authors are also indebted to R. Araujo, K. Dyer, M. Furey, J. McCarthy, F. Nimblett, D. Nokes and D. Sullivan of CSDL for their technical support and to H. Goodwin and M. Large for their typing.

physics requirements. Figure 1 is an attempt to identify these design parameters that are expected to play a major role in the design approach and impact design decisions.

The assembly of the structural system and the supertowers is recognized as the most critical issue because it affects not only delicate construction procedures with tight tolerances but has a primordial influence on the final design concept. Section 3 addresses these issues and suggests two possible erection procedures. Alignment and tolerance problems are discussed within the context of the erection procedures suggested. While different assembly techniques will create many intermediate structural configurations that need to be investigated, the present study focuses on the evaluation of the final structural system. Note that this system can be adapted to the demands of many construction techniques and modified to reflect special conditions and splices associated with a particular erection mode.

The primary function of the structure is to support the very heavy and dense mass of the supertowers contained between two ellipsoids (6436 Kips for half the calorimeter). Since the structure must offer a continuous surface to the supertowers' bases for support, a ring stiffened ellipsoidal shell was selected as a logical model. The shell behaves as a very deep beam and its overall depth (9.4 m diameter maximum at the center) offers significant stiffness capable of delivering reaction loads to end support frames approximately 10 m apart. Note that the center line of the calorimeter is 10 m above ground thus placing special demands on the tall end frames design to insure adequate stability.

In order to secure overall stability of the ellipsoidal shell sitting on the 2 end frames a longitudinal central wall was designed that provides the necessary bracing. This 10.17 m long wall framing into the end frames offers additional vertical support to the ellipsoidal shell. The amount of gravity load picked up by this wall is a function of relative stiffness between the shell itself and the wall. Note that it is not desirable to carry a significant portion of the ellipsoidal shell mass by the central wall, because it could distort the calorimeter circularity. Further analysis iterations are expected to lead to an ideal "balanced" situation.

Figures 2 and 3 show the ring stiffened ellipsoidal shell and the 3 support frames. Relative dimensions and members sizes are those of the suggested support system designed and analyzed in this report.

The design of these frames must respect many physics driven dimensional constraints and yet provide the necessary stiffness to insure acceptable deformations, stress levels and stability. The following limitations have been placed on the width of each frame:

Center Frame	25 cm
End Frame	25 cm
Longitudinal Frame	20 cm (10 cm preferably)

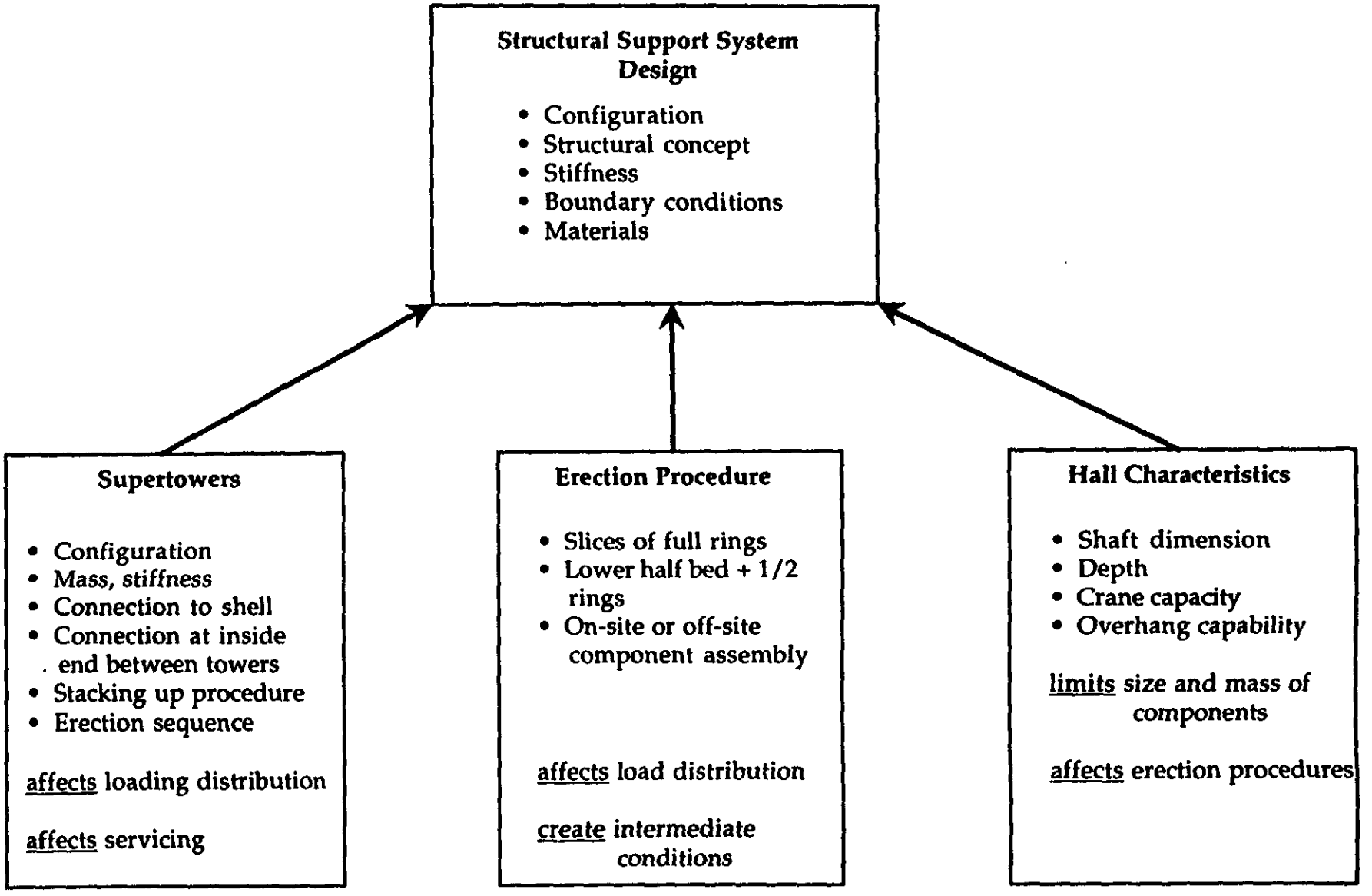

Figure 1 Structural Support System Design Parameters and Issues

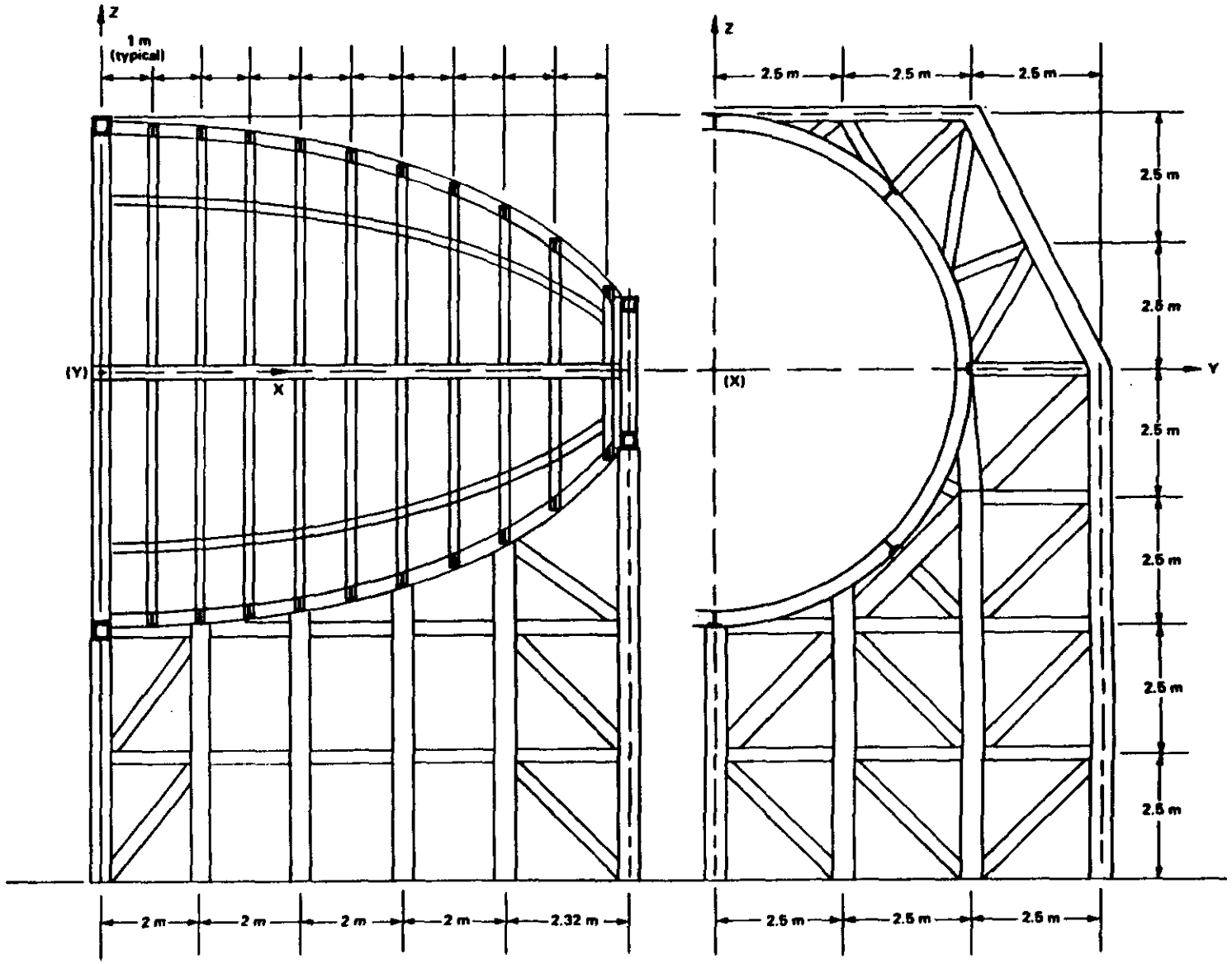

Figure 2 Suggested Structural Support System Configuration Side View and Center Support Frame

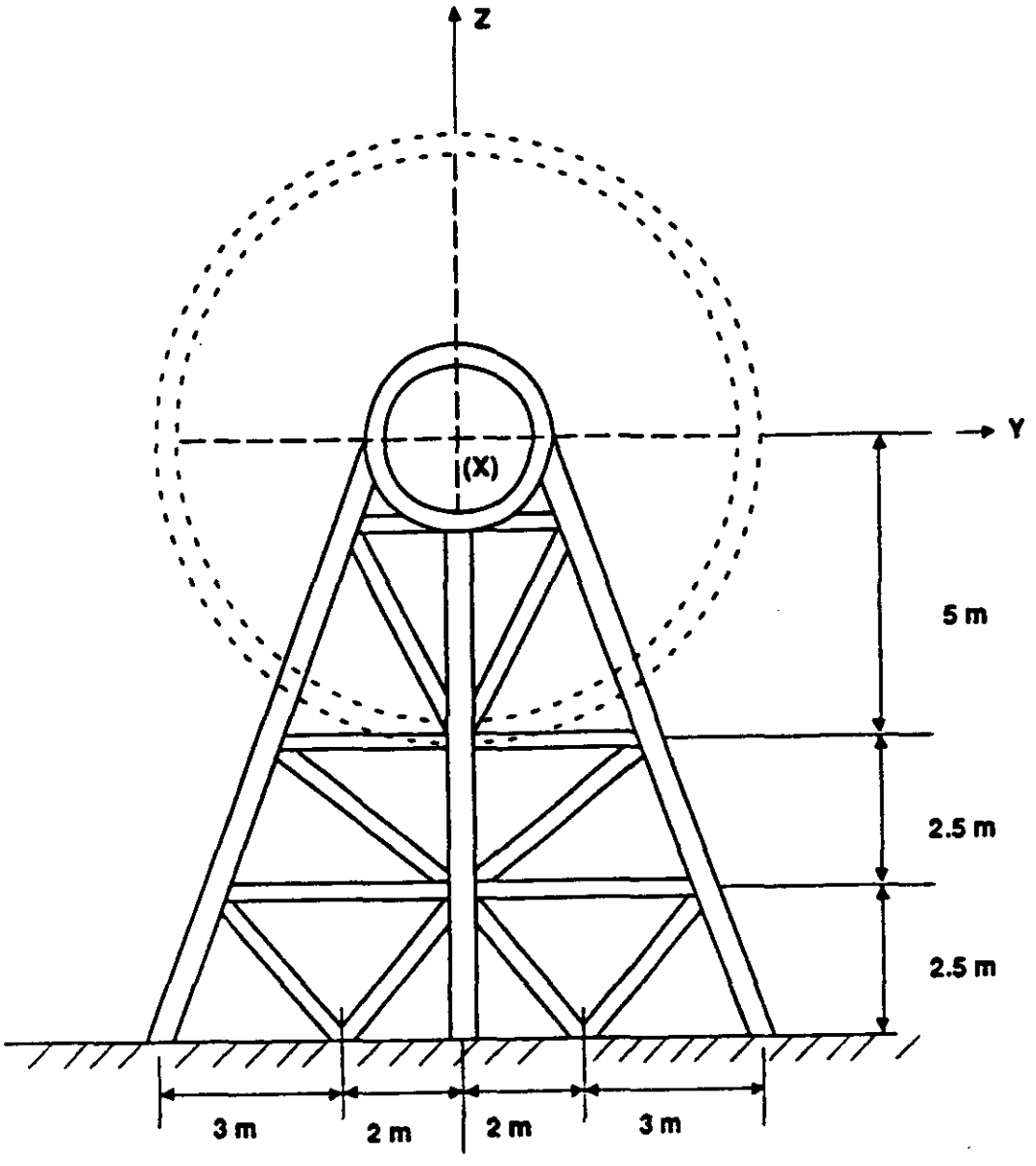

Figure 3 **Suggested Structural Support Configuration End Support Frame**

One must realize also that the shell plate is pierced by a large number of holes on a defined grid to accommodate the passage of the tower fibers thus reducing the plate carrying capacity and imposing restrictions on structural reinforcements size and locations. It is important to limit the structures complexity in order to minimize possible interference with the arrangements of a vast electronics network.

The structural support can be viewed as a linear mechanical system whose design is subordinated to the constraints of the calorimeter characteristics and requirements. Input loadings associated with operational conditions produce deformations, stresses and stability conditions that need to be evaluated against performance requirements. Figure 4 illustrates the interactions between system design variables and constraints that must lead to the definition of an acceptable structural system of stiffness K and mass M.

3.0 Calorimeter Assembly Procedure

Two assembly concepts were explored to establish calorimeter assembly feasibility and to detect any potential problem which might be encountered during assembly. These two methods identified as the "Modular Ring" method and the "Shell & Sector" method below.

Each half of the calorimeter consists of an assembly of 7,680 pyramidal towers. One hundred and twenty-eight towers are arranged in a group to form the shape of a hollow truncated cone. Sixty of these hollow cones nest to form a stack that completes the calorimeter half.

The assembly procedures described in this report assume that the towers are cast in thin metal sheaths (See Figure 5). The sheaths prevent galling of the towers if sliding contact occurs during assembly. The sheath also helps prevent physical damage to the towers and provides most of the bending strength. If the sheaths extend beyond the small ends of the towers to form a skirt (see Figure 5), they are an aid in handling the towers. Most important, though, an extended sheath provides a way of joining the towers together at the small end of the cones (see Figure 6). This makes the cone structure much more rigid and stable. Temporary alignment mirrors, if required, could also be attached to the sheath skirt.

The assembly procedures also assume that each tower will have a steel threaded insert cast in each of the four corners of the mounting plane. These inserts should also be attached to the tower sheath (see Figure 5). These inserts will be used to attach the towers to the support structure.

3.1 The Modular Ring Method

In the "modular ring" method of calorimeter assembly, each cone (made up of 128 towers) is attached to a separate steel supporting ring. The 60 rings are

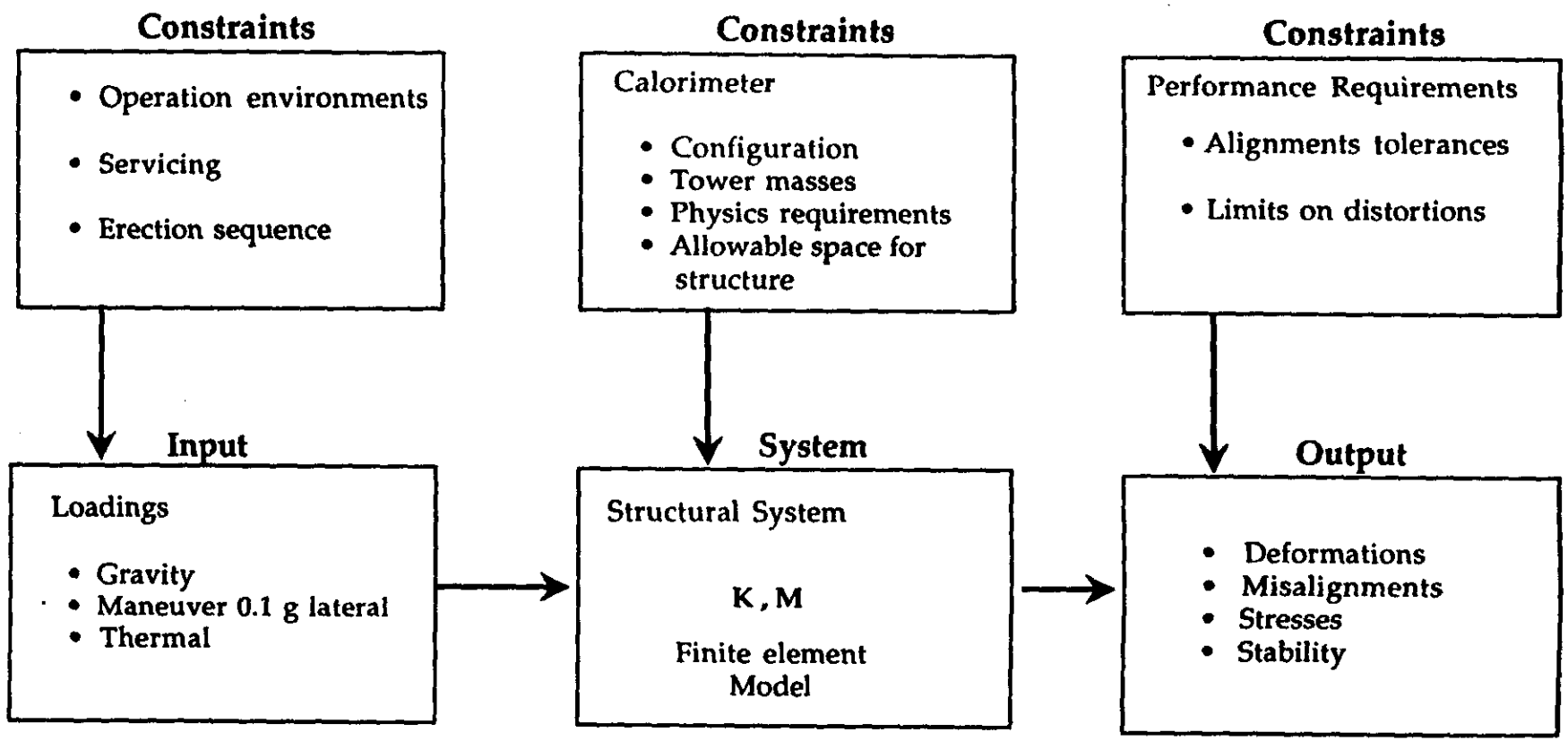

Figure 4 Structural System Design Variables and Constraints Interactions

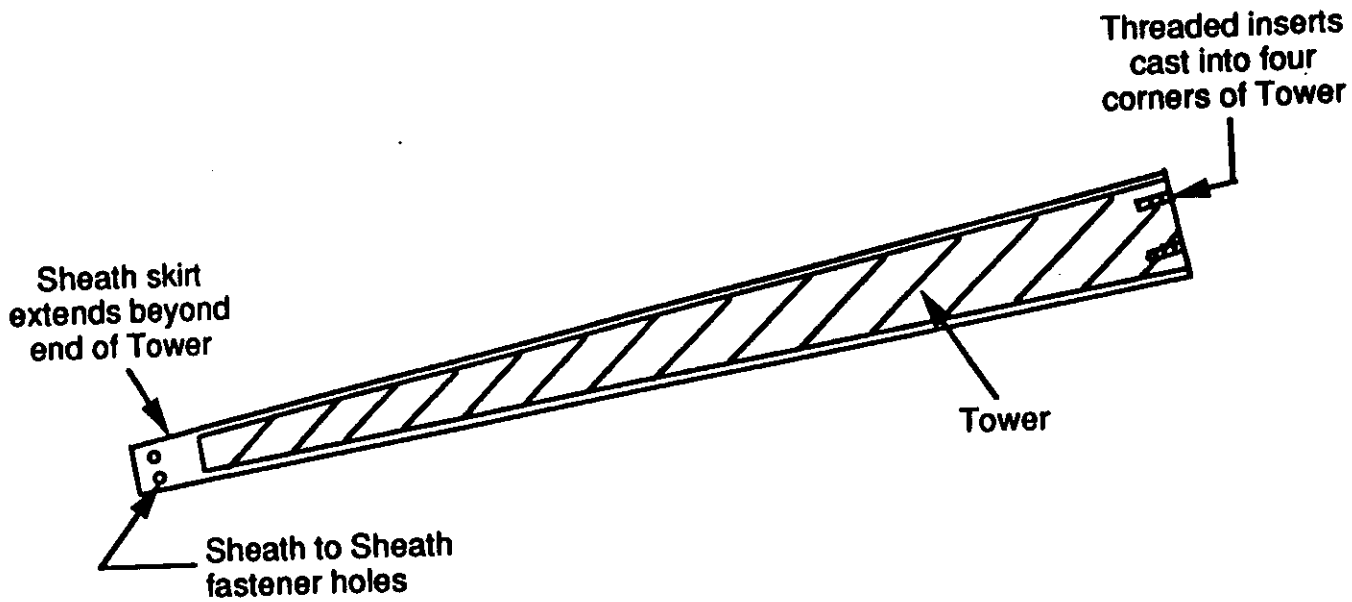

Figure 5 Tower feature.

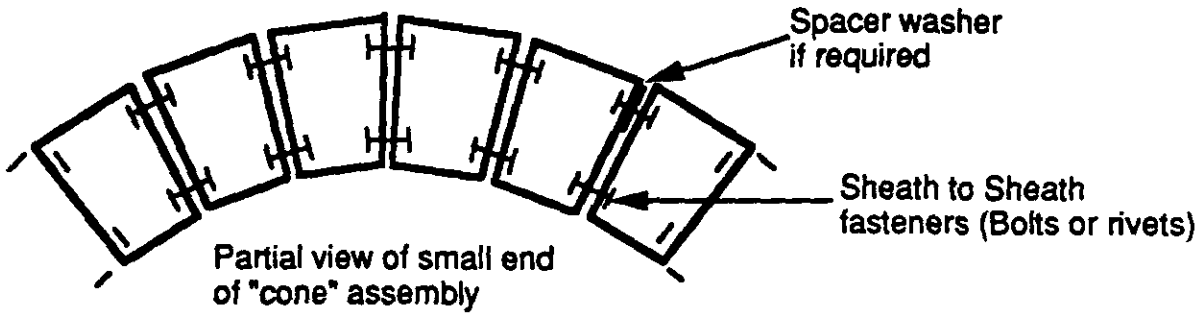

Figure 6 Sheath to sheath attachment-cone inner end.

then bolted, surface-to-surface, to form the nested stack of cones which completes the calorimeter and structural assembly (see Figures 7 and 8).

The assembly sequence to be followed when employing the modular ring method is as follows:

(1) The first modular ring to be assembled is the largest diameter ring (and cone). This module is located at the inboard end of the calorimeter half; the end where the two halves of the calorimeter come together.

(2) The temporary tower support is clamped horizontally in a cradle which is set in trunions. The ring is bolted to the support and the towers are added to the ring to form the "cone"(see Figures 9 and 10). The individual tower inner ends are supported by turnbuckles, or a similar device. One end of each turnbuckle is attached to a tower skirt through a reinforcing plate and the other end is attached to the temporary tower support. The towers can now be roughly aligned by adjusting the turnbuckles. Reference mirrors could be attached to the tower to aid the alignment process.

(3) The cradle is next rotated on its trunions until the ring is vertical and the cone axis horizontal. The ring module is lifted from the cradle and lowered into the hall where it is placed on three sets of crossed rollers which, in turn, are resting on three rails (see Figure 11). The two outboard rails are temporary. The center rail is permanently attached to the vertical supporting structure which is located between the bottoms of the "C" tanks. Crossed rollers are used to allow motion of the module along the ring axis and permit limited adjustment of the module across the ring axis.

There is a spring and a jack, in series, between the ring module and the rollers on the two outboard rails. The springs assure that the load distribution on the three rails is correct despite geometric errors caused, for example, by non-parallelism of rails and rail deflection. The jacks, if moved together, adjust the height of the ring module and if moved differentially, adjust the angular position of the ring module around its axis.

A wheeled "outrigger" assembly is attached to the module (see Figure 12). The purpose of the outrigger is to stabilize the ring module and to aid in adjusting its position around a vertical and horizontal axis. This arrangement of the rollers and the outrigger permit adjustment of the ring module in all six degrees of freedom.

(4) Tower alignment can now be re-checked and corrected. The tower skirts are now joined as shown in Figure 6. The turnbuckles are

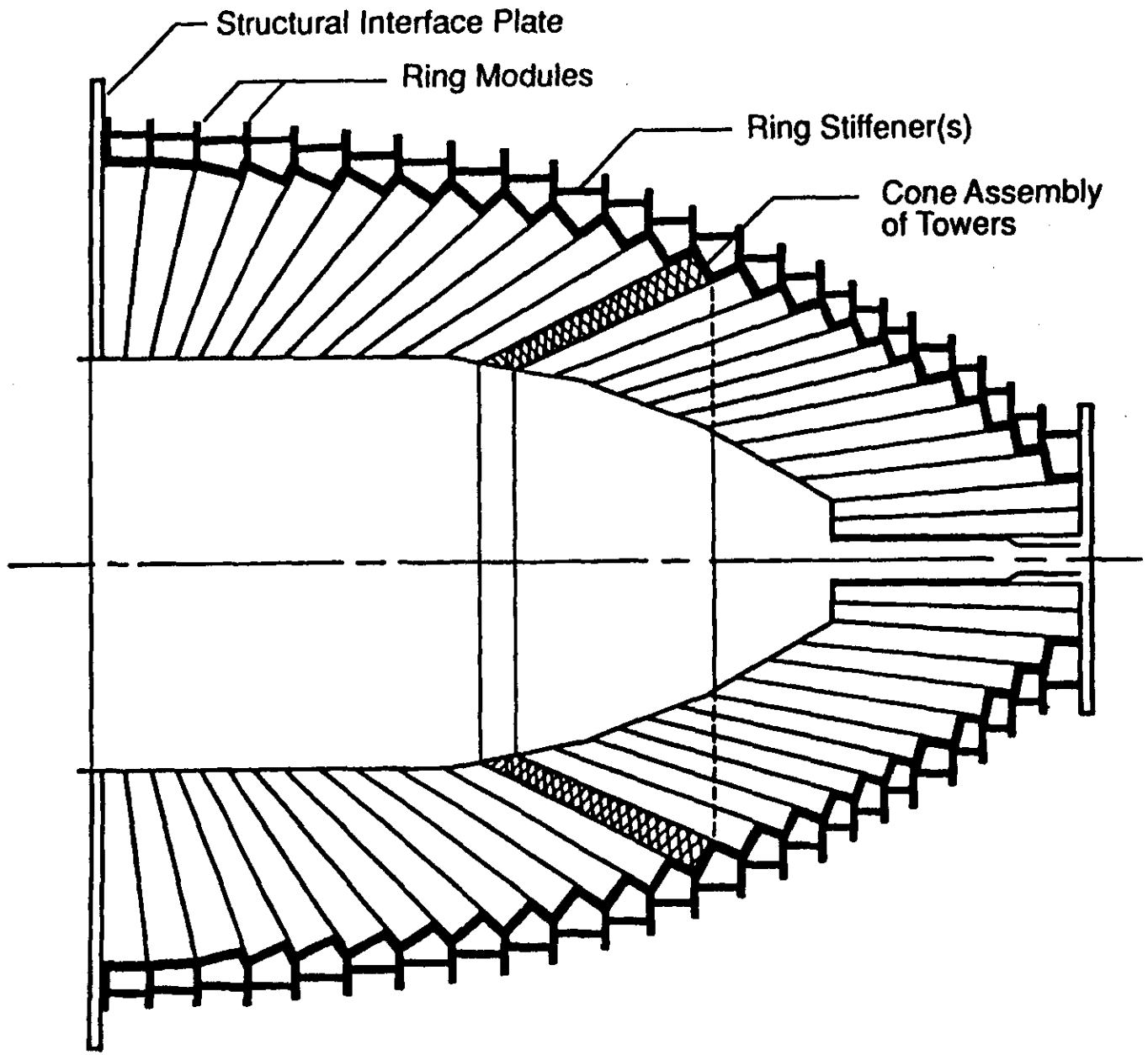

Figure 7. Modular Ring Calorimeter

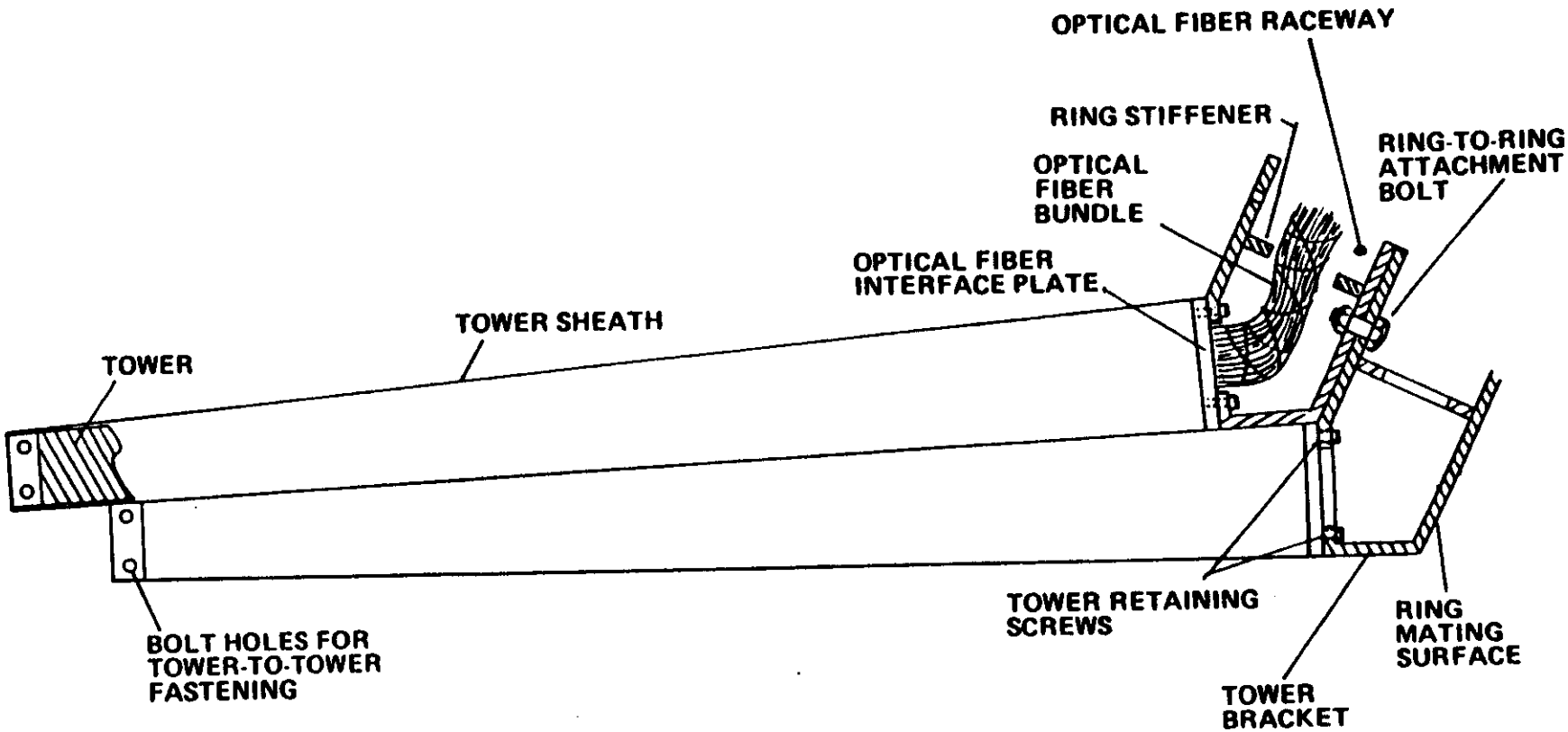

Figure 8 Two ring modules and tower attachment detail.

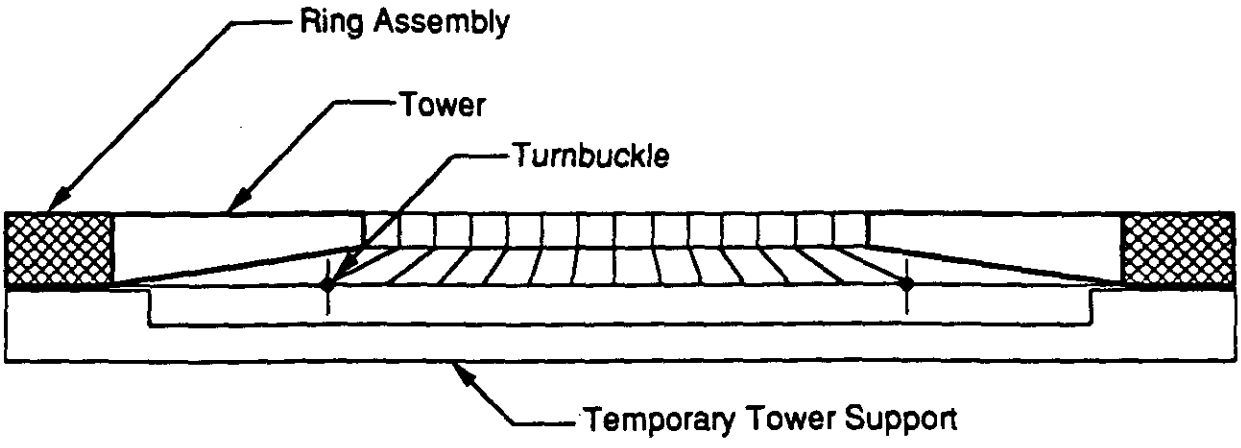

Figure 9 Tower support-inboard ring module.

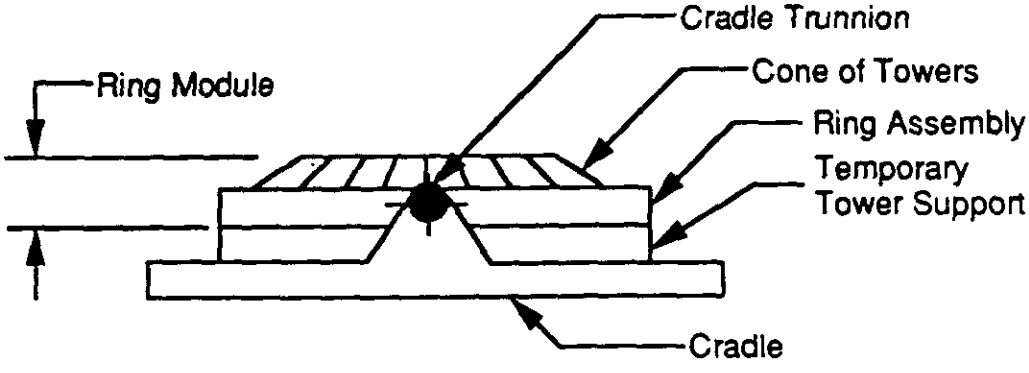

Figure 10. Ring module in cradle.

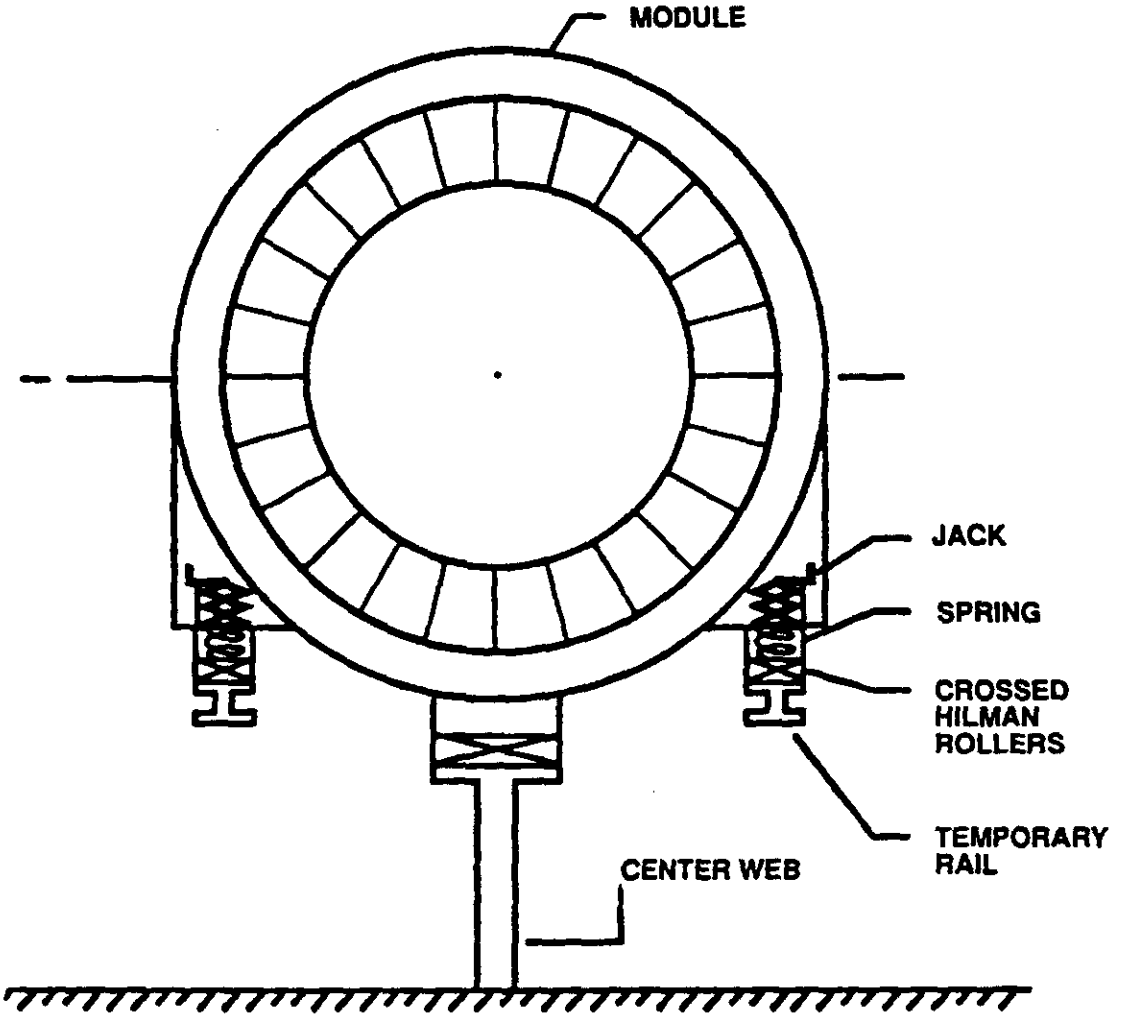

Figure 11. Rail Support Scheme.

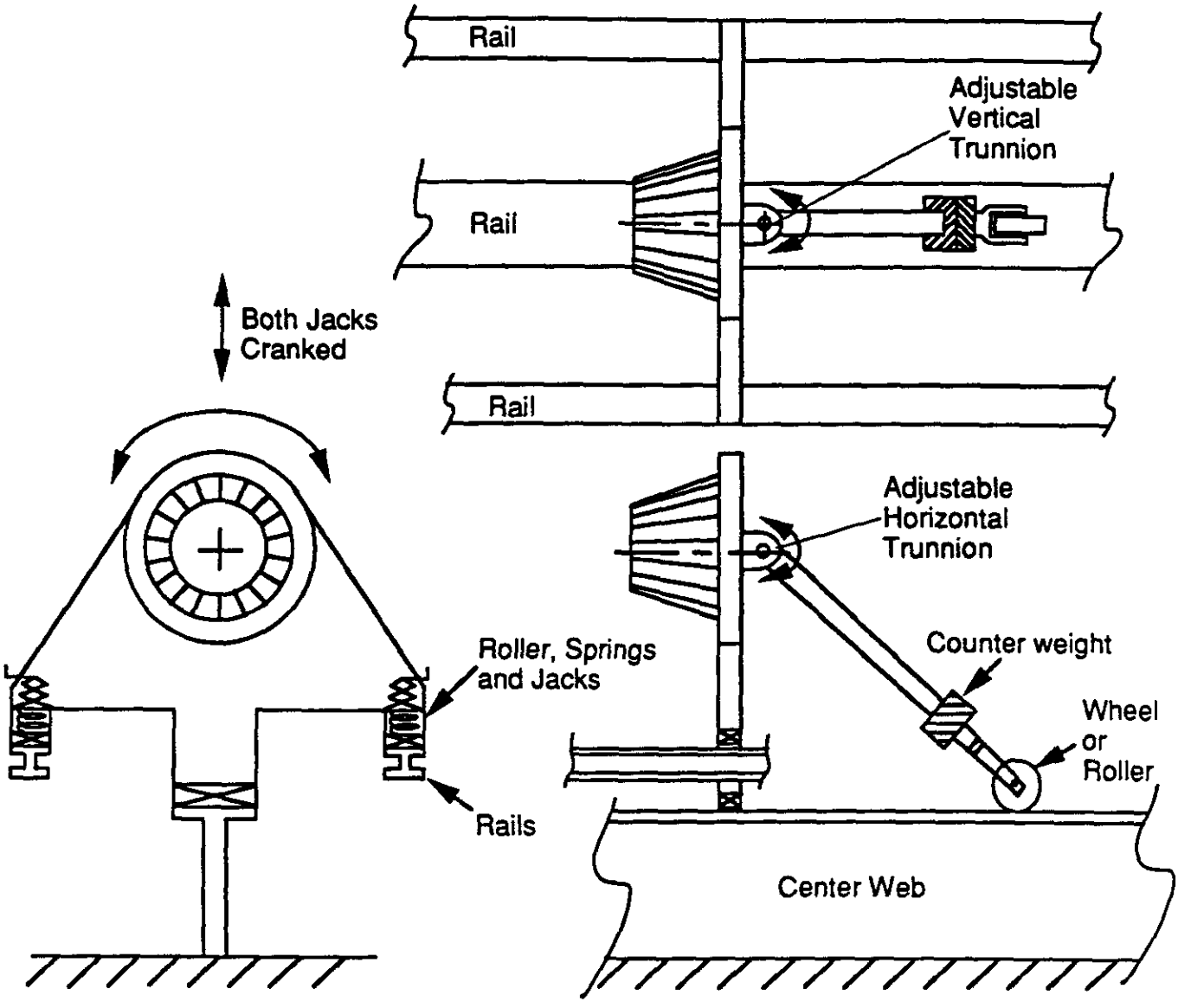

Figure 12 Module adjustment system.

removed and the alignment is checked again. The temporary tower support remains in place to give radial stiffness to the ring. The ring is now rolled along the rails until it is in place against its mounting points on the cross-axis vertical supports, the permanent vertical supports between the two calorimeter halves.

The ring is adjusted about the six degrees of freedom as required and bolted to the mounting points. The temporary tower support can now be removed because radial stiffness is now provided by the cross axis vertical support. The outrigger is also removed, as are the crossed rollers on the outboard rails. The cross rollers on the center rail should stay in place though they could be replaced by a permanent jack or shims.

(5) The next ring in the stack, the second ring, is placed in the cradle, assembled and aligned as described in procedure 2 above.

(6) The ring module is now rotated to vertical, lowered into the hall and placed on three crossed rollers on the three tracks as described in item 3 above. The outrigger assembly is also attached to the module.

(7) Tower alignment is checked and corrected. The cone size and cone angle is now checked to assure that it will properly nest with the internal cone of the first ring module and that the rings will butt when the nesting takes place.

(8) The position of the second ring module is adjusted and the module is now rolled forward and bolted to the first module. The temporary tower support and the outrigger can now be removed (see Figure 13).

Because some tower-to-tower sliding contact is almost inevitable, the outer surface of the second cone can be coated with a thin film of an EP lubricant.

(9) Successive ring modules are added using the same assembly sequence until the calorimeter is complete. When the forward calorimeter towers are added and the outboard cross-axis vertical supports are attached, the temporary outboard rails are removed.

The temporary tower support for the outboard ring module is shown in Figure 14. It is expected that only a few temporary tower supports, which will be adaptable to a range of ring modules, will be required.

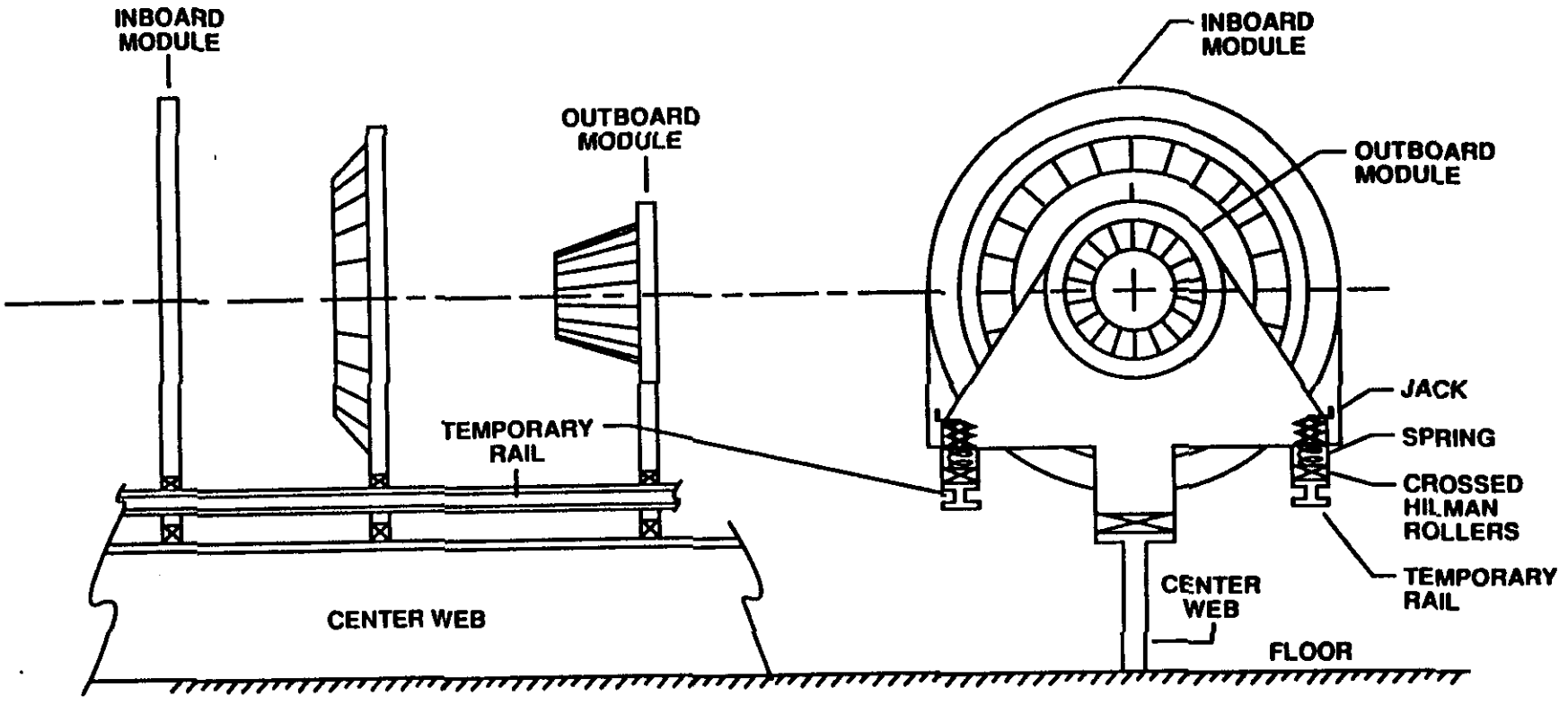

NOTE: EACH MODULE CAN BE ADJUSTED IN SIX DEGREES OF FREEDOM AT ASSEMBLY

Figure 13. Rail layout.

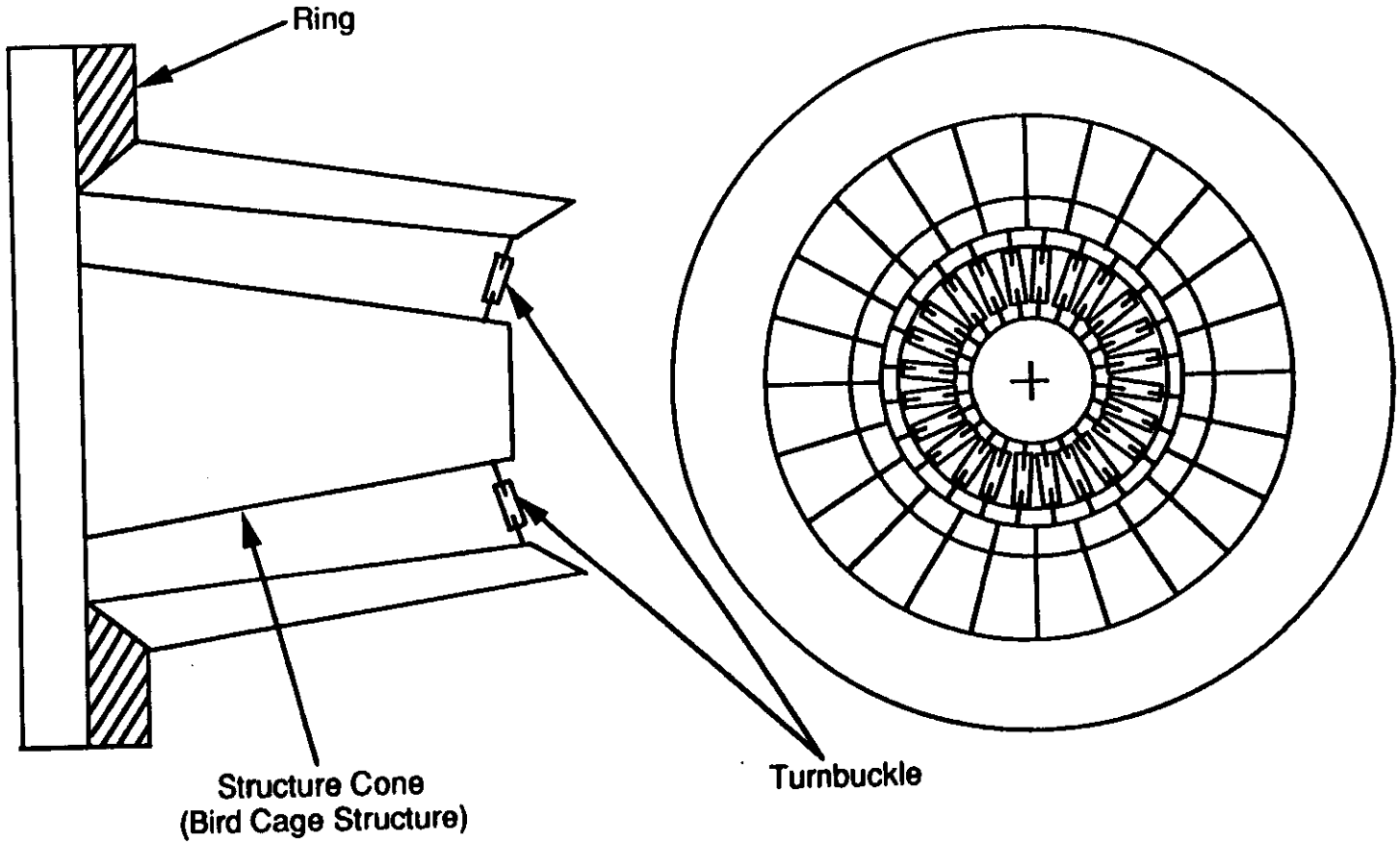

Figure 14 Tower support outboard module.

(10) Calorimeter disassembly, if required, takes place in the reverse order of assembly.

Even though it is not specified in the assembly procedure, the complete calorimeter or successive mating ring modules could be assembled above ground. This would permit fit problems to be resolved without monopolizing the hall.

There are no identifiable safety hazards in this assembly process that are not normally associated with this class of construction project. All adjustment and interfastening of the towers takes place at the exposed face of the cone. It is not essential that workers enter the calorimeter while it is being assembled. It is necessary, however, for workers to get under the calorimeter when the ring modules are being bolted together. When this operation takes place, the temporary outboard rails are in place providing additional safety.

The assembly technique described above has the following features:

1. The assembly is modular.

2. Tower alignment of each module is carried out separately. Alignment adjustments do not effect other modules.

3. Modules are of manageable weight (approximately 100 tons).

4. Module assembly and preliminary tower alignment take place above ground. The fit of each module with its axial neighbor can also be gauged above ground.

5. In-hall assembly operations consist only of squaring each module with those already in place, final alignment, rolling the module into position and bolting it to its axial neighbor.

6. Any module can be removed for inspection, repair, or replacement by unbolting one or both sides of the module ring.

7. It is not required that a worker enter the calorimeter during assembly although it might be an aid to more accurate nesting.

3.2 The Shell & Sector Method

An alternate concept explored for assembling the calorimeter is the Shell & Sector method. This method involves fabricating a reinforced shell structure that holds the lower 50% (3,840 towers) of the 7,680 towers that make up one half of the calorimeter. The upper 50% of the towers are held in place by 180°

structural sectors, or half rings similar to the full rings used in the modular ring method of assembly (see Figure 15).

With this method of assembly, the shell is constructed and attached to its permanent supports before assembly of the calorimeter proceeds.

The assembly sequence to be followed when employing the Shell & Sector method is as follows:

(1) Attach temporary bracing cables to the shell from one interface flange, horizontally across the top of the shell, to the other interface flange. These cables will prevent the shell from spreading under the weight of the towers until the structural sectors are added.

(2) Attach the tower adapter brackets to the towers that are to be loaded into the shell (see Figure 16).

(3) Load the tower that is centered and closest to the mouth of the shell first and bolt it in place. Load a tower to the left and then load one to the right of the center tower. Continue this alternate left-right loading until this first course of towers is complete to the top of the shell interface flange. Check and correct the alignment of the towers and join the tower skirts as shown in Figure 6.

(4) Add the second course of towers, directly behind the first course until the full course complement is installed. Check the alignment then fasten the skirts of the towers in the second course to the skirts of the towers in the first course.

(5) Continue adding courses of towers until the 3,840 towers have been installed and the shell is filled.

(6) Assemble the upper 50% of towers to the sectors starting with the outboard (smallest) half ring or sector. Assembly of the towers on the sectors closely parallels the assembly of the towers on the full rings in the modular ring method of assembly, therefore this process is not repeated here.

(7) When the towers have been assembled to a sector, checked for alignment and joined at their skirts, the sector is ready to be joined to the shell. Remove bracing cables that may interfere with the assembly of the outboard sector. Lower the sector in place and align it with its matching course of towers in the shell below. Bolt the sector to the shell at the interface flange.

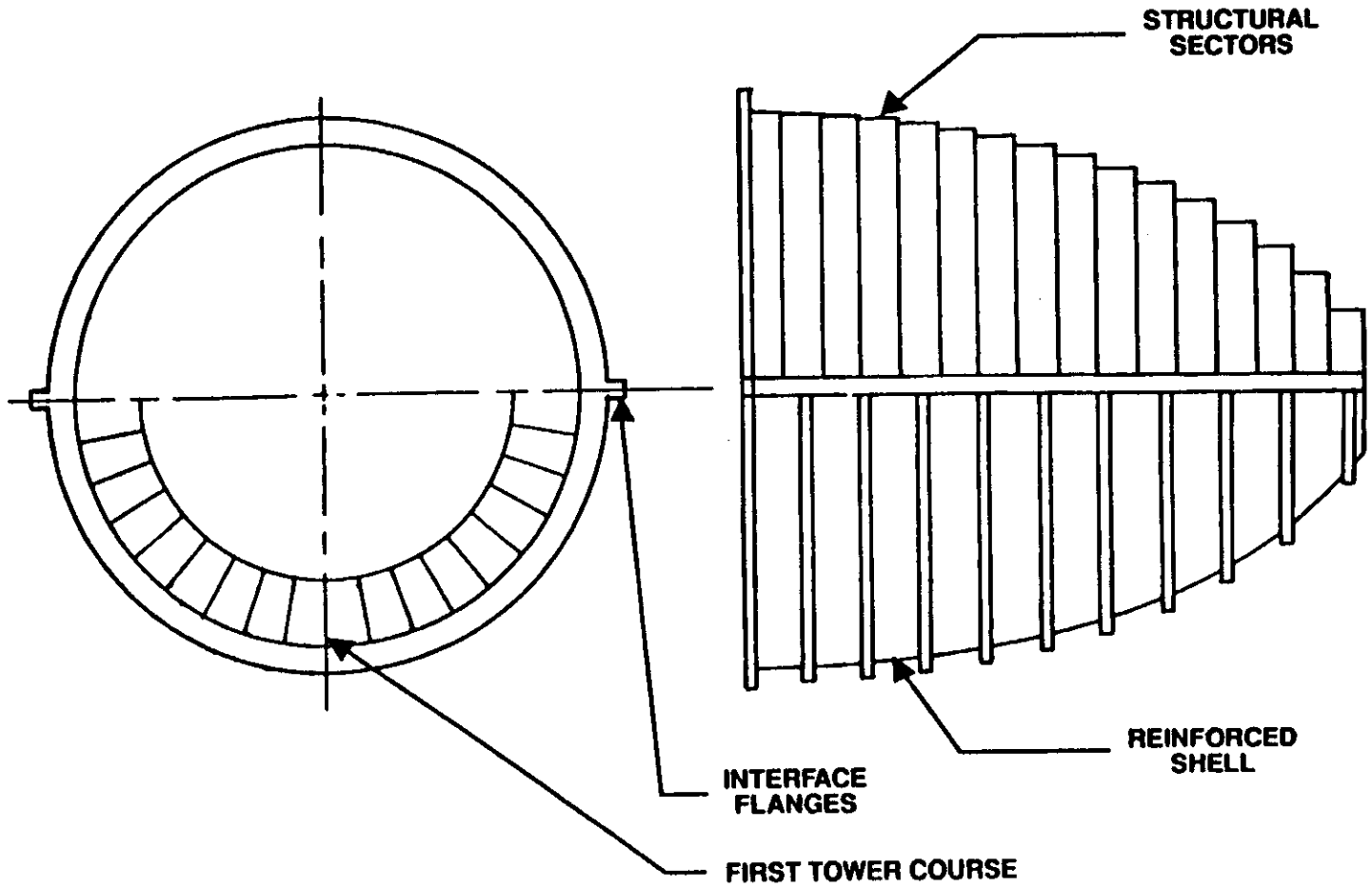

Figure 15. Shell and Sector Tower Support Method.

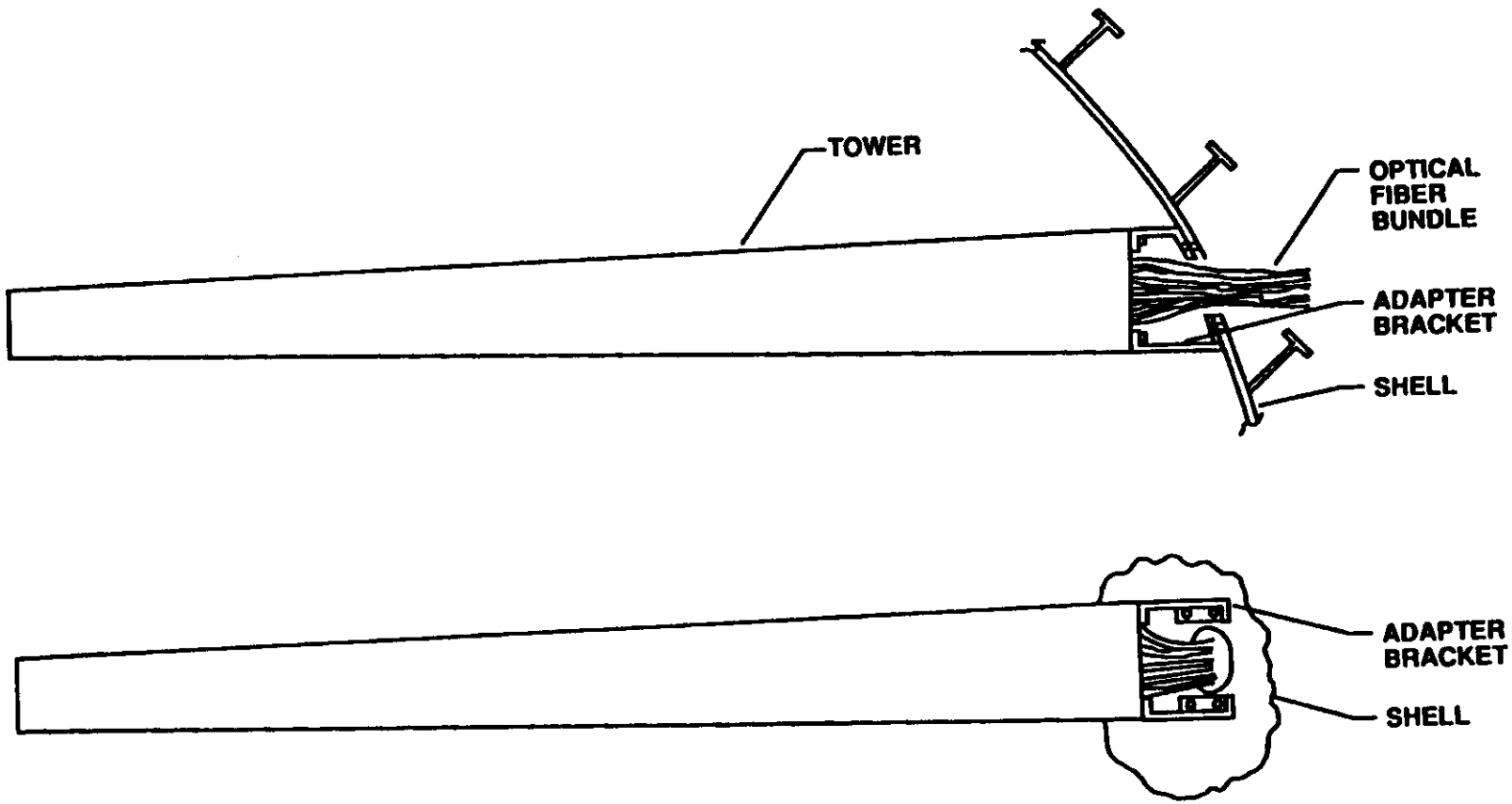

Figure 16. Tower to Shell Interface.

(8) Continue adding sector-tower assemblies, progressively removing the bracing cables, until the calorimeter half is complete.

As with the Ring-Module method of assembly, there are no abnormal safety hazards associated with this assembly method.

The assembly technique described above possesses most of the advantages of the modular ring method and in addition has the following features:

1. The shell is a permanent structure, permanently mounted, before the towers are added.

2. The weight of the sectors is half the weight of the ring modules making handling easier.

3. Temporary rails and rollers are not required.

4. Because the sectors are assembled to the shell vertically there is no need to extend the structure beyond the outboard end of the calorimeter.

3.3 Assembly Procedure Issues and Tolerances

The assembly process for the calorimeter is driven by the configuration of the unit, it's functional requirements and the structural demands of the assembly. Other factors such as safety, maintainability and cost must also be considered.

One of the principal requirements for the calorimeter is "hermeticity" and that is directly influenced by the issues of dimensional tolerances and alignment of tower elements. A discussion of the assembly of the calorimeter, or any other mechanical device, is incomplete if tolerance issues are not addressed.

Each half of the calorimeter consists of an assembly of 7,680 pyramidal towers. One hundred and twenty eight towers are arranged in a group to form the shape of a hollow truncated cone. Sixty of these hollow cones nest to form a stack that completes the calorimeter half.

Ideally, there is perfect face-to-face contact between the adjacent towers in each cone assembly and perfect face-to-face contact between the nesting towers in each mating pair of cones in the stack. The ideal calorimeter would have no tower-to-tower gap between any two adjacent towers in the assembly. In addition, each tower axis must point $5° \pm 2°$ away from the centroid of the assembled calorimeter (two butted calorimeter halves).

Attaining this ideal of 100% tower fill with no gaps requires effort to achieve in practice. There will be tolerances on tower cross sectional dimensions and tolerances on tower taper angle and angle between tower faces. For example, if each tower in a cone were only one thousandth inch (.001 in.) too small at the base dimension, 128 towers placed face-to-face in the required circle would leave a gap of 0.128 in. between the last two towers. Conversely, if the towers were 0.001 in. too large, there would be insufficient room for the last tower because the space would be too small by 0.128 in.

Similarly, if tower taper angles are not perfect the assembled cone angle will not be perfect, compromising the face-to-face fit of one cone with its axial mate in the stack. Errors in the trapezoidal cross section of the towers will lead to edge-to-edge contact instead of face-to-face contact between adjacent towers in the cone.

The "cone" assemblies are, in fact, not cones but are 128 sided pyramids. Because the "cones" are actually faceted, to nest a cone perfectly with its next axial neighbor the cone must have perfect orientation around its axis. Also, if the pointing angles of the tower sets in the two mating cones are not exactly the same, nesting will be imperfect.

The above tolerance issues are complicated by the fact that the towers are made by casting cerrobend alloy (a bismuth, lead, tin, cadmium eutectic alloy that melts at 158°F). This material grows in dimensions (volume) after solidification. Five hundred hours after solidification each linear dimension will have increased .0057 in. per inch. The largest diameter cone in the stack (8 meters diameter) has a circumference of about 1,000 inches. The cerrobend growth will increase this circumference by 5.7 in. Growth characteristics of the cerrobend after 500 hrs. of aging are not available from the manufacturer.

It should be noted that the tolerance concerns discussed above are intrinsic and are almost entirely independent of calorimeter assembly and support techniques.

Five approaches to circumvent difficulties imposed by tolerance build-up are:

(1) Leave space between the individual towers in the cone assembly and between the nesting cones.

This space would accommodate dimensional variations, pointing tolerances, and cerrobend growth uncertainties.

This is the simplest scheme to implement but it has disadvantage of rendering the calorimeter non-"hermetic".

(2) Casting a complete cone rather than individual towers.

This would require a massive casting but with an alloy melting temperature of 158°F the problem is greatly eased (Cerrobend castings have been made "as big as a car" and a 5,000 pound melt is routine). A large sheet metal mold, supported by sand, could easily be maintained at 158°F in a simple heated enclosure. Melting of the alloy could take place by continuously conveying cerrobend pellets to a small melt chamber and conducting the liquid cerrobend from the chamber to the mold.

The energy required is the same as for casting individual towers. Cooling time of the large casting should be reasonable because the cone is relatively thin walled; the surface area to volume ratio is high. Slow cooling encourages grain growth in the alloy which increases creep resistance and tends to increase other physical properties as well. It would be relatively simple to fly-cut the cast cone to finish dimensions if desired.

This method would produce true cones of precise angle rather than 128 sided pyramids. The result would be better cone nesting with no axial rotational alignment requirement. Because there are no towers, there is no space between towers to consider. This approach would yield the most "hermetic" calorimeter both circumferentially and axially. Because the cone would be a single unit it would be far more rigid and self supporting than a cone of individual towers. Reinforcing rods could be integrated into the cast cone if analysis showed it was desirable. Alternately, the casting could be made with a dimensional "bias" to compensate for gravity induced sag when the cone is turned to axis horizontal. Because the cone is cast in one piece, maintaining pointing accuracy of the scintillating fibers should be easier. If it is undesirable to make a single cone casting, the cone could be cast in segments of one-third, one-quarter, etc., of a cone although the full, one piece, cone would be much stiffer.

An important consideration in casting the entire cone is the characteristic growth of the tower alloy. The growth dimensional change would have to be compensated for in mold design. Also, because of the calorimeter configuration, some cones would be cast with the fibers essentially horizontal and other cones would be cast with the fibers essentially vertical.

A variation on this technique would be to cast individual towers and combine these towers to make a complete cone by casting them in a matrix of a lower melting point alloy.

1. Introduction, Objective and Summary

The objective of this study is to assess the feasibility of a structural system to support the scintillator calorimeter of the Superconducting Supercollider (SSC) as proposed by a Texas collaboration. To address this feasibility study we have designed, modeled, analyzed and evaluated a preliminary structural system capable of maintaining various elements of the calorimeter within required tolerances when exposed to operational environments.

The outcome of this evaluation provides a first-cut design for the calorimeter structural support with dimensions of shell, shapes of rings, reinforcements and frame members. Special attention is given to many dimensional constraints imposed by the physics of the experiment as well the assembly procedures of the calorimeter since they are expected to have a significant impact on structural support design decisions.

The primary goal of this study was to define a plausible structural concept with a reasonable level of design details and demonstrate with a finite element model its adequate performance both from the physics and structural efficiency point of views. One should emphasize however that other concepts could be investigated that would perhaps enhance the effectiveness of the experiment. A different approach to the calorimeter support system could also be advocated in order to accommodate a particularly attractive erection procedure. While we suggest in this report the design and analysis of an acceptable candidate, further work should address trade-off studies in order to select the best possible concept.

The analysis of a finite element model was used to identify the deformations of the structure under the enormous mass of the supertowers, establish stress levels throughout the support structure and provide force and moment components necessary for the evaluation of structural stability.

After a few iterations, the maximum deformation under gravity loads amounts to 3 mm at the apex of the shell (at the center of the calorimeter) caused by the frame shortening (2 mm) and some slight ovalization of the circular shell (1 mm). The calculated stresses in the shell show a maximum of approximately 16 ksi with 4 ksi from overall shell actions and 12 ksi associated with local bending. Circular rings and longitudinal reinforcements exhibit significantly lower stress levels at about 2-3 ksi. Most supporting frame members exhibit large compressive axial forces that require stability checks. Generous factors of safety (2 to 6) have been identified against lateral buckling.

A quasi-static loading associated with a longitudinal 0.1 g acceleration was considered as a disturbance caused by the slow motion of the entire half calorimeter structure. The 1 cm longitudinal deflection caused by the flexing of the longitudinal central frame members could be alleviated by additional diagonal members. Temporary supports could be advocated during the maneuver to minimize any

potential structural problems. While this loading condition does not present a serious problem, more work and investigation are required to identify the mechanical system characteristics, determine maneuver disturbances and evaluate structural responses.

The total weight of the structure for one half of the calorimeter is ~150 tons of steel so that the entire calorimeter support will require approximately 300 tons of steel. Assuming $1.0/lb for steel erected in a complex shell structure with tight tolerances the total cost of the calorimeter support system is expected to be approximately $660,000.

This report includes 6 sections. Section 1 above defines the objective of the study and provides a summary of the technical activities and findings.

Section 2 addresses considerations associated with the definition of a structural concept for the calorimeter support. Construction issues, physics experiment requirements and constraints, structural configuration, splices locations, stiffness distribution and supertower erection methods must all be taken into consideration in selecting an acceptable and plausible support structure.

Section 3 discusses possible assembly procedures to integrate the supertowers with the structural support system. Two concepts, (a) modular ring method and (b) shell and sector method, are explored to establish calorimeter assembly feasibility and to detect any potential problems which might be encountered during the assembly process. Special attention is given to manufacturing approaches of supertowers, tolerances impacting "hermeticity" and tower alignment.

Section 4 describes the design of the calorimeter support structures with configuration and dimensions, structural elements selection, material and components elastic properties. Two loadings are discussed : (a) gravity load and (b) a 0.1g longitudinal acceleration associated with calorimeter maneuver.

Section 5 addresses the finite-element modelling and the evaluation of structural responses to the loadings. Rationale for the FE model development is discussed along with simplifying assumptions. Deformations and stresses illustrated with plots are discussed and the stability of frame members is evaluated.

Section 6 addresses technical issues involved in the design, transport, assembly and installation of the calorimeter that should be the subject for further investigation. Structural support design optimization is proposed and the much needed evaluation of many local structural problems is emphasized.

2. Design Concept Considerations

The choice of a structural support system for the calorimeter is subordinated to many design parameters associated with various phases and modes of construction, supertower erection sequences and available space dictated by detector

(3) The third method of dealing with the tolerance build-up issue is to make one custom tower for each cone.

With this technique, towers would be assembled into a cone but one cone would be left out of the full complement leaving an unfilled space. After the cones were butted face-to-face and the proper cone angle set, the dimensions of the remaining space would be taken and a custom, or "correction", cone would be made to fit it.

This method may be workable but is awkward to implement.

(4) Another method of accounting for dimensional variations is to allow the OD of the base of the cone assembly to vary.

Using this method to make the cone, a full complement of towers, arranged face-to-face, forms the cone. The calorimeter support structure would be required to account for the variation in cone major diameter due to variations in tower width.

This method is acceptable for individual cones but loss of control over cone diameters makes axial nesting difficult.

(5) The axial or stack tolerance build-up is analogous to the circumferential tolerance build-up. One way of dealing with tolerance build-up axially, along the length of the calorimeter, is to insert a customized "correction" ring module at intervals, perhaps at one-third the stack, two-thirds the stack and at the end of the calorimeter (i.e. every 20 rings). The correction module would cancel out tolerance accumulations thus bringing the dimensional configuration of the stack from "where it is" back to the theoretical nominal of "where it is supposed to be" at the point of insertion of the custom module.

Also influencing the assembly technique is the design of the individual cerrobend towers. Because of the growth characteristics of this material, it is important that the towers be aged for at least 500 hours before assembly is started. During this time it is necessary that the towers be stored as cool as possible and in a manner that will minimize stress. The physical properties of this material decrease rapidly with increase in temperature. If the towers are stored hot and under stress, dimensional creep may be a problem.

Because the tower and tower sheath are trapezoidal in cross section, it is possible that growth of the cerrobend after casting will bulge the sides of the sheath. This will prevent face-to-face contact of the towers. This effect can perhaps be prevented by pre-bowing the sides of the sheath inward before casting the cerrobend.

4. Structural Support Design Description

The structural support for the calorimeter includes two identical halves (mirror images) that must be capable of moving away from each other to gain access to the inside tracker and the calorimeter interior space. Figure 17 shows the two separate structures models in an open position. Design, modelling and evaluation are therefore presented here for one independent half portion of the calorimeter.

The main structural system is a ring stiffened ellipsoidal shell with radii a = 10.7 m and b = c = 4.7 m. The shell modelled as truncated 10.17 m from the center offers an opening of 3.14 m diameter for the calorimeter end plug. The 2 cm thick shell is reinforced by 10 outside rings disposed 1.00 meter on center. A larger ring is provided at the center of the shell as well as the end face. The center ring is a tube intentionally stiff (36 X 36 X 4 cm) because it is anticipated to provide support for half of the center tracker as a cantilever. Eight reinforcements (same properties as the rings) run the length the ellipsoid 45° apart, around the circumference. Longitudinal reinforcements are added also every 22.5° for the first 4 m of the shell near the center where additional stiffness is required.

The ellipsoidal shell acts as beam with reactions picked up by two vertical end frames. The center frame has a width of 25 cm and uses rectangular tubes disposed in a truss like configuration for better material efficiency. This frame is designed and configured to help preserve shell circularity in an area of very large reaction loads. The end frame of trapezoidal shape and 25 cm wide supports a lesser reaction load but this advantage is somewhat lost because of the 10 m unsupported length of its members. Out of plane stability of the frame main members require relatively large stiffness properties to insure acceptable slenderness.

A longitudinal frame, provided under the shell, connects the two end frames thus insuring longitudinal overall stability. The width of this frame must be minimized at all cost since the radiation along the vertical center plane of the calorimeter is more intense and cannot trade extremely valuable space for the structural support. The vertical frame includes 4 interior posts with width limited to 20 cm. A revised design will increase the number of posts to 8 while reducing their width to 10 cm. Table 1 summarized the shape and dimensions of the main elements of the structural support system.

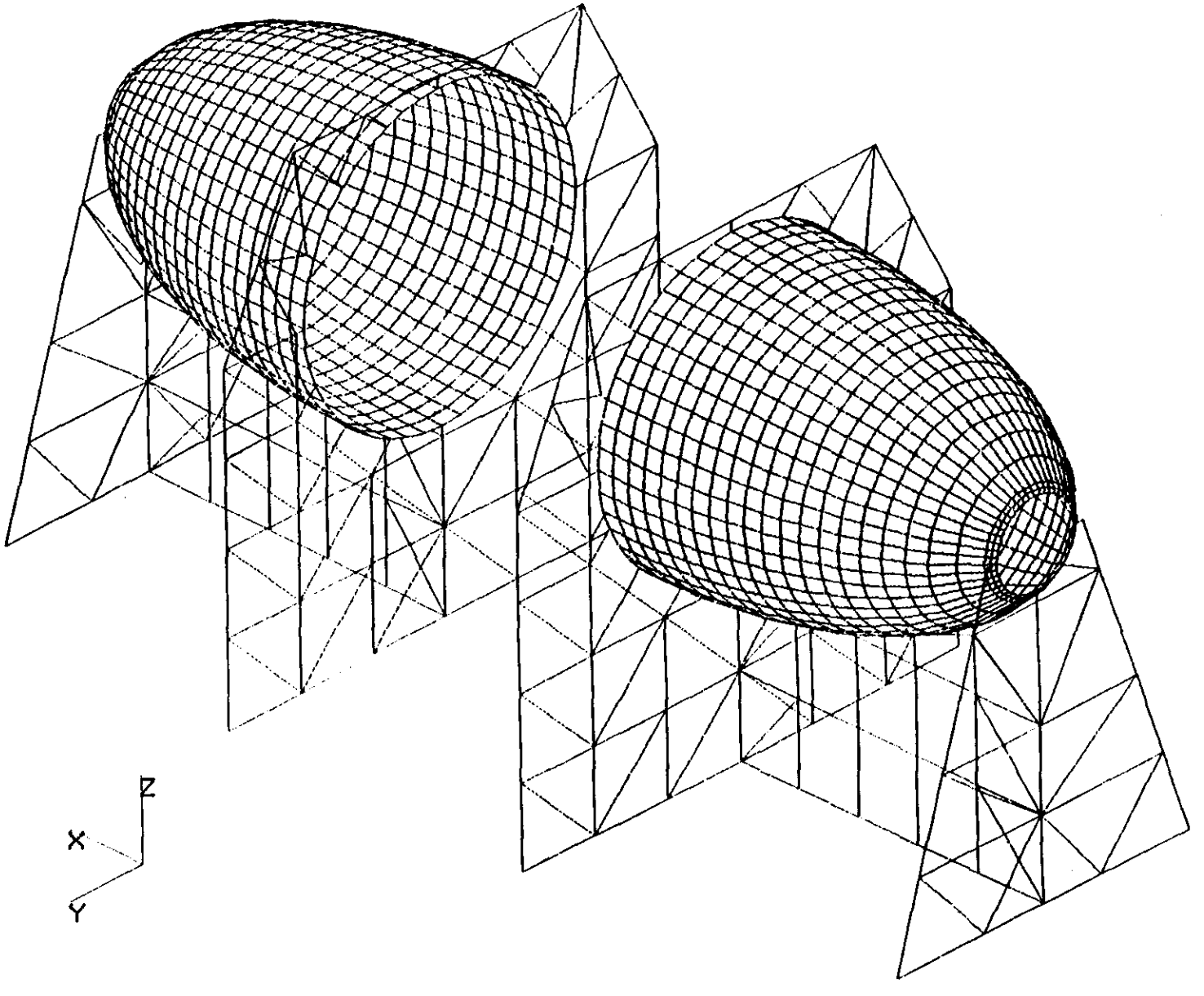

Figure 17 Calorimeter Halves in Open Position

Table 1 Structural Components Description

Element	Configuration & Dimension
Shell	Plate 2 cm thick
Circular Rings & Longitudinal Reinforcements	T Section: 22 cm X 1.5 cm web 16 cm X 2 cm flange
Center Ring End Ring	Tubes: 36 X 36 X 4 30 X 30 X 2
Center Frame End Frame	Tubes: 25 X 40 X 4 Vertical 25 X 25 X 3 Diagonal & Horizontal Tubes: 25 X 40 X 3 Vertical & Diagonal 25 X 25 X 3 Horizontal & Diagonal
Longitudinal Frame	Tubes: 20 X 40 X 3 Vertical 20 X 20 X 2 Horizontal & Diagonal

The material proposed for the shell and the frames is a high strength steel of Fy = 50 ksi with the following properties and allowable stresses:

Modulus of elasticity	$E = 30 \times 10^6$ psi $= 2.068\ 10^{11}$ N/m^2
Density	$\rho = 0.28$ #/in^3 $= 7800$ kg/m^3 $= 76900$ N/m^3
Poisson's ratio	$\nu = .3$

Allowable tension stress $F_t = 30$ ksi $= 2.07\ 10^8$ N/m^2
Allowable bending stress $F_b = 30$ ksi
Allowable compression stress: Function of slenderness

Table 2 provides the cross sectional properties of frame members and shell rings and longitudinal reinforcements. Figure 18 depicts the cross-section of the shell stiffening ring and longitudinal reinforcement.

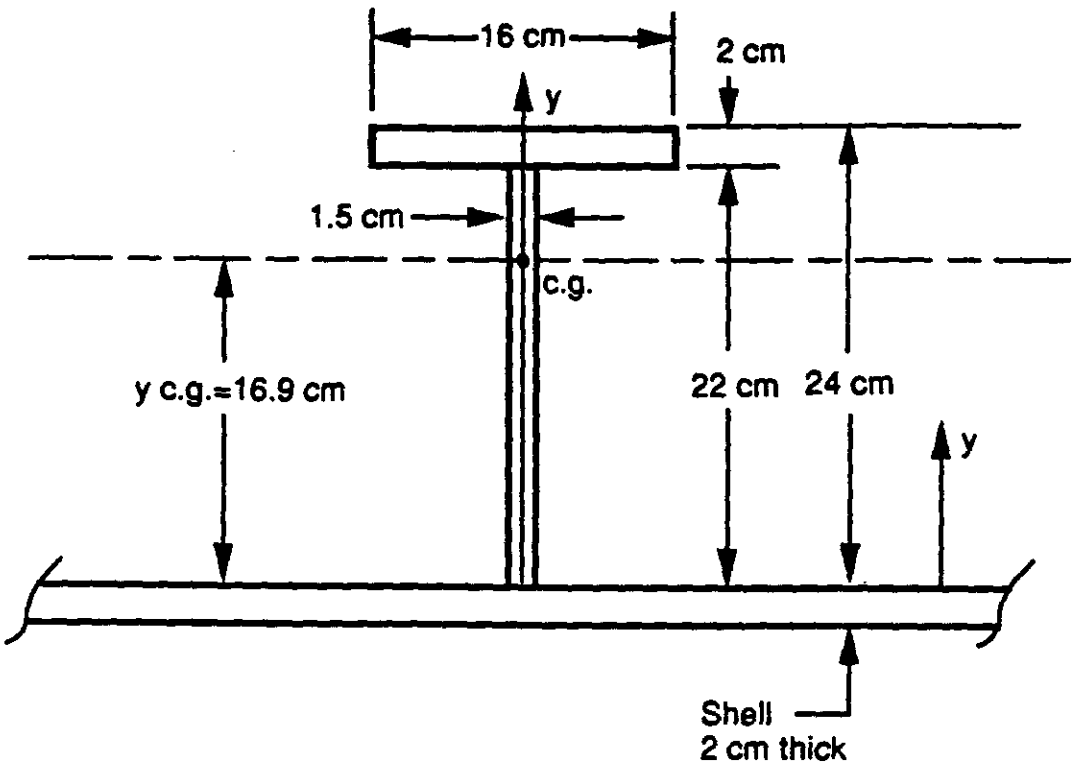

Figure 18 Circular Rings and Longitudinal Reinforcements Cross-section

Table 2 Element Cross-Section Properties

	Ref.	Cross Section Dimensions	Axial A m^2	Bending Ixx m^4 $x10^{-4}$	Bending Iyy m^4 $x10^{-4}$	Torsion Izz m^4 $x10^{-4}$	Shear A m^2
FRAMES	A	20 X 40 X 3 Tube	.0324	1.889	6.0812	4.396	.0324
	B	25 X 40 X 3	.0354	3.265	7.11	6.738	.0354
	C	25 X 25 X 3	.0264	2.17	2.17	4.34	.0264
	D	20 X 20 X 2	.0144	.546	.546	1.092	.0144
		Web Flange					
RINGS	R1	22 X 1.5/16 X 2	.0065	.03681	.0069	.005	.0065
	R2	36 X 36 X 4 Tube	.0512	8.875	8.875	17.75	.0512
	R3	30 X 30 X 2 Tube	.0224	2.94	2.94	5.88	.0224

R1 reinforcing rings and longitudinal reinforcement.
R2 circular ring at center frame.
R3 circular ring at end frame.

Loadings Discussion

The major loading to the structural system is imposed by the heavy and dense supertowers attached to the ellipsoidal shell (2200 tons). The distribution of the tower gravity load along the circumference as well as the length of the calorimeter is strongly dependent on the stacking and erection procedure of successive towers. The towers are expected to lean on each other and the loading distribution may be affected by relative stiffnesses, connection details with the shell and between towers, friction and sequence of erection. It is therefore impossible at this juncture to anticipate the proper loading distribution and we are proposing to use a uniform distribution along the circumference at each station of the ellipsoidal shell. From a local point of view, stresses and deformations might be somewhat inaccurate but in the overall sense of the structural evaluation this assumption is not expected to affect results appreciably. We should emphasize also that this type of assumption is in line with the simplifications and approximations inherent to a preliminary or first-cut evaluation.

The structural design concept requires that the ellipsoidal structural system be opened in two halves moving away from each other to access the tracker and the inside of the calorimeter. A mechanical system must be developed to generate forces necessary to pull/push a mass of approximately 3000 tons for each calorimeter half. While the travelling motions are expected to be extremely slow and carefully controlled, it is desirable to evaluate structural integrity for a

longitudinal force associated with this maneuver. We suggest a longitudinal force (x-direction) caused by one tenth of gravity acting on every mass of the system. This loading is expected to place serious demands on the supporting frames and might well be the governing factor for structural stability of the members. In case this loading proves very serious for the integrity and stability of the system, we could easily consider the use of temporary support members during the maneuver. One the C-tanks are removed additional members could be installed between the ellipsoidal shell and the base to stabilize the moving structure. This approach is recommended since it avoids penalizing the design for a loading that might occur only occasionally or far apart in time.

5. Finite Element Model and Analysis Results

5.1 Finite Element Model

The approach to the finite-element modelling of the calorimeter support structure reflects the objective of this evaluation that attempts to obtain a first order estimate of the structural performance. While simplifying assumptions are employed as legitimate means to keep modelling and analysis tasks to reasonable dimensions and complexity, it is important to retain in the model elastic and inertia properties that are dominant in affecting the fundamental behavior of the system.

By invoking symmetry about a vertical plane the finite-element model of only half the structure can be considered. Figure 19 is a view of the model where relative dimensions and elements can be identified. The ellipsoidal shell is represented by 24 shell elements around half the circumference with 2 elements (50 cm wide) between reinforcing rings along the longitudinal direction. Circumferential and longitudinal shell reinforcements are modelled as beam elements with appropriate eccentricities. All the frames use beam elements with 6 DoF's per node. Boundary conditions along the plane of symmetry have been imposed to restrict y-motions and x-rotations. The support of the structural system is provided at the interface of all the frames with the ground, 10 m below the calorimeter center line.

The finite-element model has the following characteristics:

# Shell elements	:	528
# Beams	:	618
# DoF's	:	4326

The mass of the supertowers was assumed to be distributed uniformly along the circumference at each station of the shell axis. The loading is computed from the volume enclosed between two ellipsoids at each station x and assigned as body loading to the shell. The structural steel mass is computed automatically by the program and assigned to the appropriate nodes.

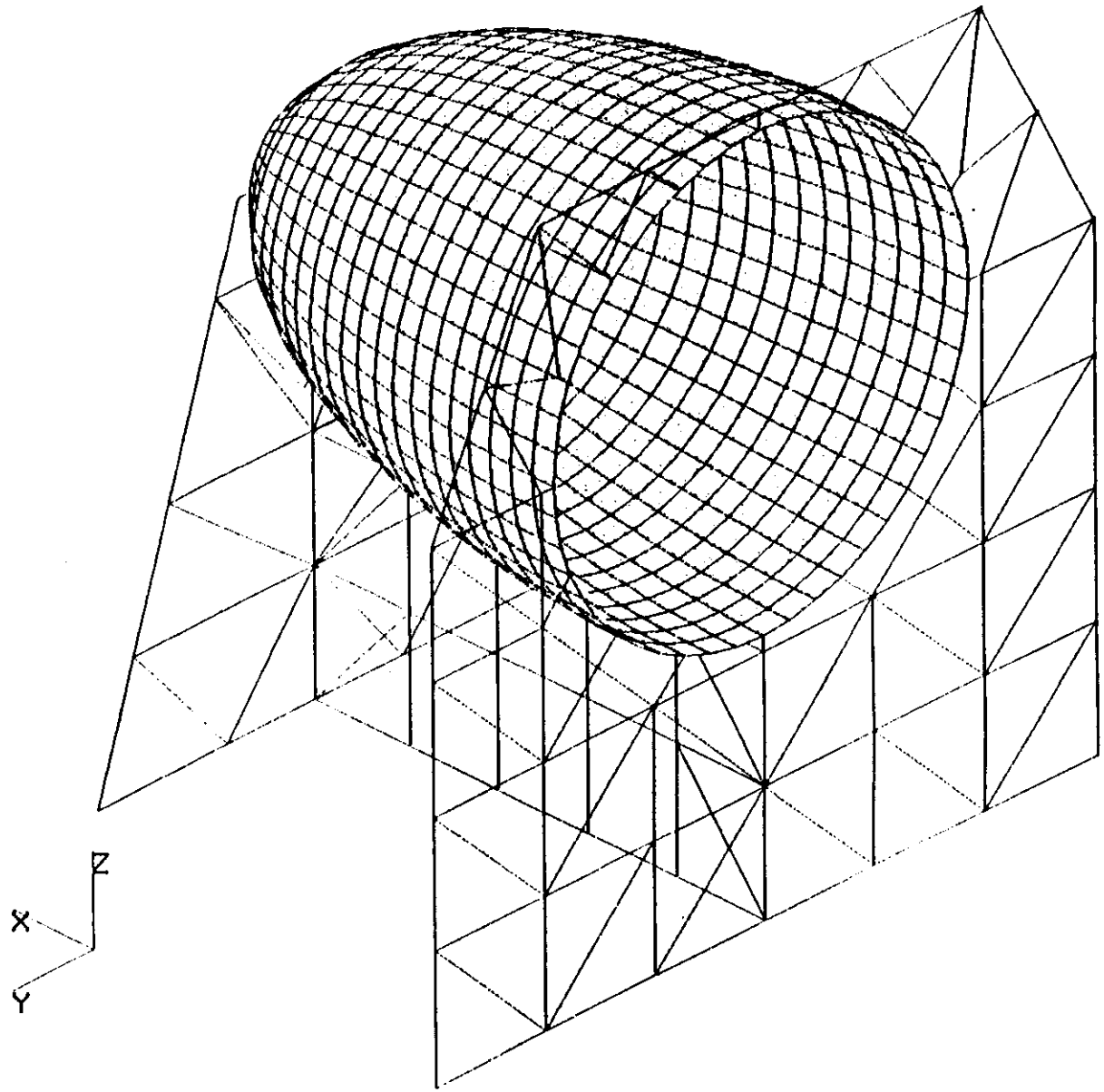

Figure 19 Finite Element Model of Shell Reinforcements and Frames

The PATRAN program was used to generate part of the model and the NASTRAN routine provided the static response of the structure to the gravity loads. Displacement components at each node, shell stresses and frame member force/moment components are available for evaluation.

5.2 Response to Gravity Loading

Our first design exhibited large deformations and required modifications. Due to (a) additional shell stiffening near the center of the calorimeter, (b) a significant increase in the edge ring and (c) broadening of the center wall, the deformations of the structure now remain very small with a maximum of 3 mm. Figures 20 and 21 show views of the undeformed and deformed (grossly exaggerated) structural system for comparison. Most of the deformations occur in the highly stressed supporting frames while the shell itself remains very close to its original configuration but undergoes rigid body motions. Results indicate that deformations can be kept within tolerances dictated by performance requirements. The maximum distortion of 3 mm is expected to increase somewhat when many construction details, joints and interference constraints will be taken into consideration and will affect flexibility.

The 2 cm thick shell is stressed both circumferentially (hoop stresses) and longitudinally as it acts as a deep beam in bending. The stress reported in the color coded plot of Figure 22 refer to a stress state expressed by von Mises criterion. The maximum stresses recorded in the plot must be increased to allow for loss of material due to holes in the shell plate (factor of 1.25) and stress concentration estimated at 2. Under these conditions shell stresses associated with the overall support structure remain under 5 ksi. (Note that 6.894×10^6 N/M^2 = 1 ksi). It should be emphasized that local bending stresses will be significant (estimated at 12 ksi) in comparison but they may vary depending on the attachment mode of the supertowers to the plate.

The supporting frames are the most stressed elements of the structural system and since the frame members are mostly in compression their allowable stresses must decrease to insure stability. Table 3 evaluates for all the main vertical posts in each frame the factor of safety against buckling. Actual load can be compared to the critical allowable load as defined by the AISC Steel Code. Conservative assumptions have been used for the stability check although no allowance was made for bending which is however small. The table shows that there are generous factors of safety above and beyond the one already included in the critical allowable load. Results show that the end frame could be stiffened in order to even out the deflections along the center line of the calorimeter. It is evident that many iterations also could optimize the design and use material more efficiently.

The breakdown of the tonnage of structural steel required for the support system of one half calorimeter is as follows:

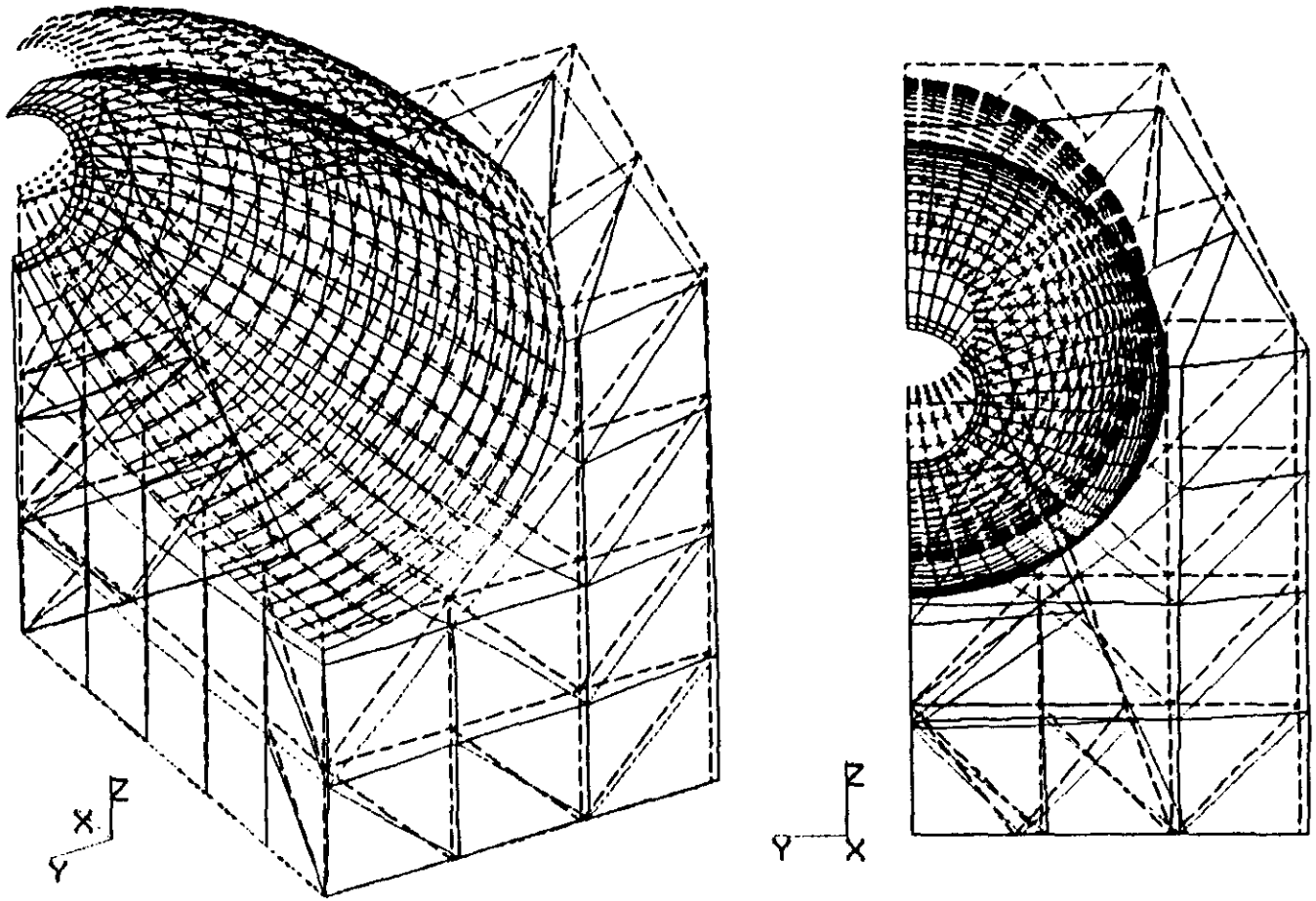

Figure 20 **Finite Element Model Deformations due to Gravity (Maximum = 3 mm.)**

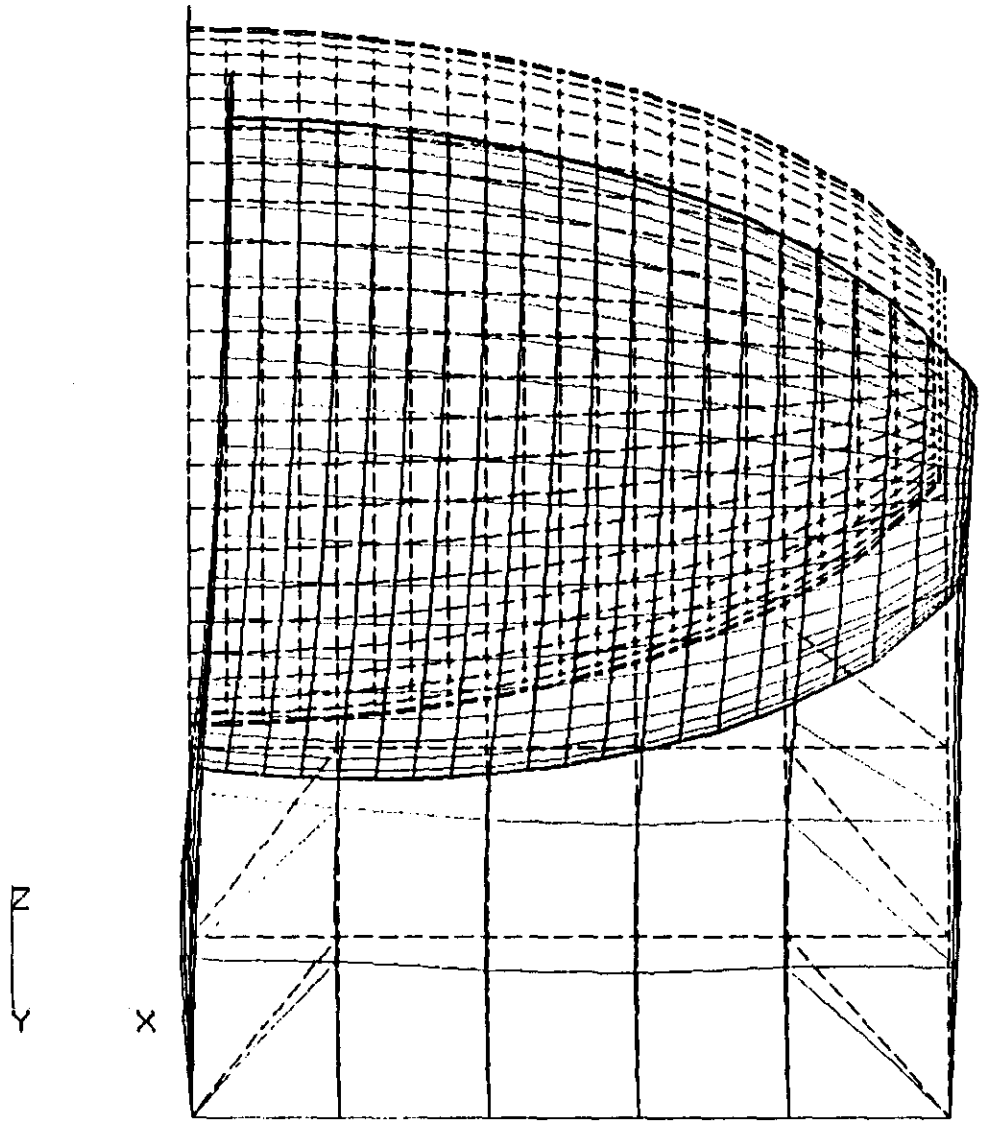

Figure 21 Structural Deformations due to Gravity (Maximum = 3 mm.)

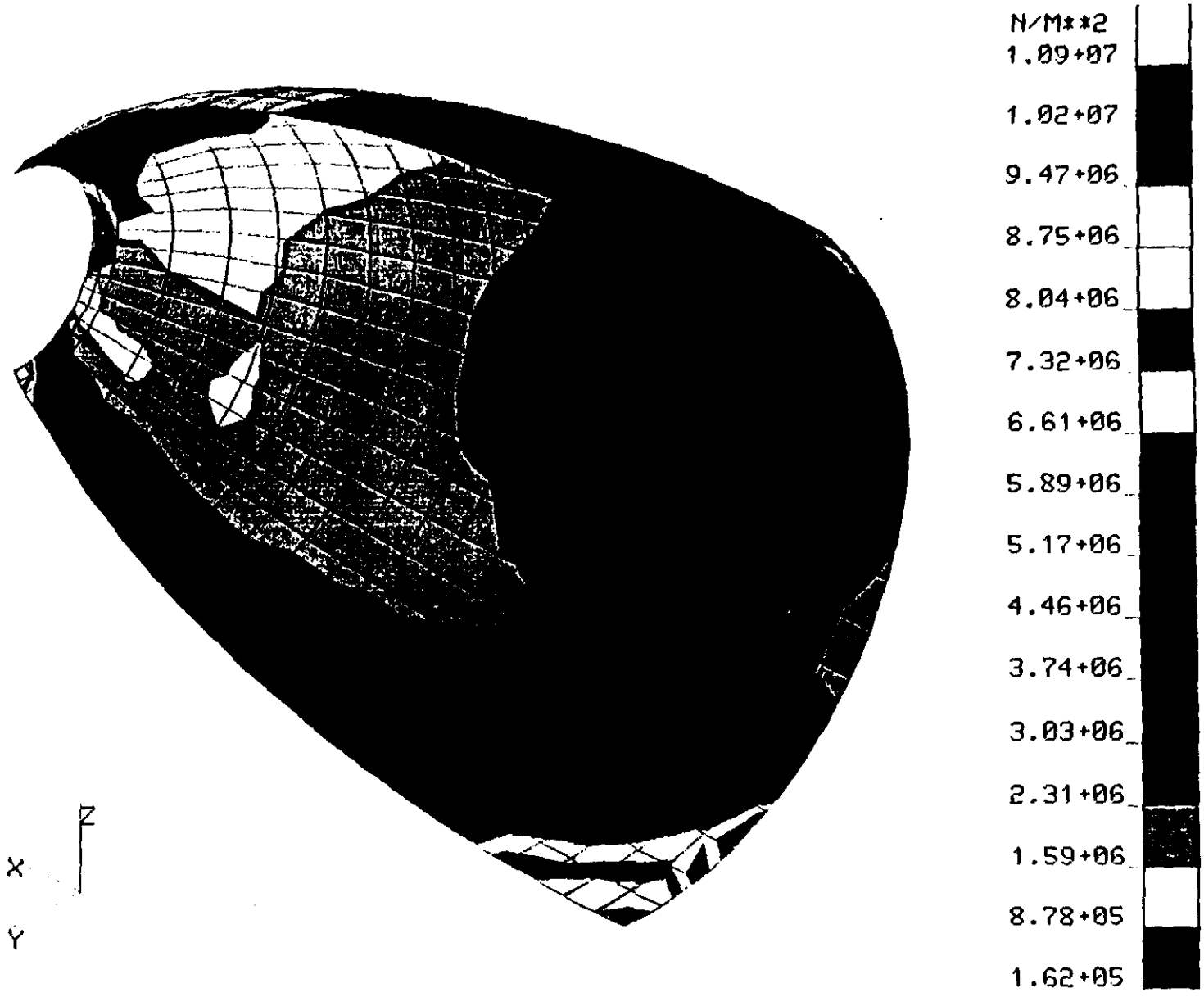

Figure 22 Stress (N/m^2) Distribution in Ellipsoidal Shell ($6.894 \times 10^6 N/M^2 = 1$ ksi)

Shell Plate	40.0	Tons
Circumferential rings	11.6	
Longitudinal rings	6.1	
End rings	14.1	
Center frame	58.6	
End frame	18.0	
Longitudinal frame	10.4	
Total	158.8	Tons

With another iteration the weight of the center frame is expected to decrease without affecting deformations and stresses appreciably. In summary the structures of the support system of the entire calorimeter will require approximately 300 tons of steel.

An estimate of the cost of the structural support can be based on a $1.0/lb for steel erected into a complex shell structure with tight tolerances. With this assumption the cost of the entire calorimeter support structure would be $660,000.

Table 3 Frame Member Stability Check

Frame Member	Cross Section	Unbraced Member Length	P Actual	Allowable P Crit.	Factor of Safety F.S.
Central		[m]	[N] x 10^6	[N] x 10^6	
C1	25 X 40 X 4	2.50	2.08	8.65	4.1
C2	25 X 40 X 4	5.80	1.71	6.98	4.1
C3	25 X 40 X 4	10.00	2.01	4.02	2.0
C4	25 X 40 X 4	10.00+	0.98	4.02	4.1
End					
E1	25 X 40 X 3	3.50	2.88	6.44	2.2
E2	25 X 40 X 3	10.00	2.20	3.36	1.5
Longitudinal					
L1	20 X 40 X 3	5.50	1.66	4.55	2.7
L2	20 X 40 X 3	5.80	2.20	4.38	2.0
L3	20 X 40 X 3	6.00	2.36	4.29	1.8
L4	20 X 40 X 3	6.70	2.02	3.88	1.9

Notes:

- Column assumed hinged at both ends K = 1.0
- Use AISC Code with 50 ksi yield point steel
- Slenderness ratios $\lambda = \frac{KL}{r}$

  where L = unbraced length
  r = minimum radius of gyration

- F.S. is above the FS already included in P crit.

5.3 Response to Longitudinal 0.1g Acceleration (+ Gravity Loading)

Each half of the structural support system is expected to be moved longitudinally to gain access to the tracker and the inside of the calorimeter. A longitudinal acceleration (x-direction) of 0.1g was assumed as a reasonable input associated with this maneuver. Static forces obtained by multiplying each nodal mass by the 0.1g acceleration were used to evaluate the structural response. Figure 27 shows the deflected structures under the longitudinal loading and gravity load where the maximum x-displacement is about 1 cm. It is obvious that the members of the central longitudinal frame under the ellipsoidal shell provide most of the stiffness and undergo relatively large deformations. Additional diagonal bracing members in the 3 center bays of the frame could alleviate distortions significantly. A revision of this frame design is planned to reduce its width to 10 cm and more diagonal members will be added to increase longitudinal stiffness. As mentioned previously temporary supports could come to the rescue if excessive deflections or stresses need to alleviated.

5.4 Tower Support Issues and Local Effects

A typical tower is a 747 kg truncated trapezoid of square cross-section with 26.4 cm side at the shell interface and 12 cm side at its inside face (see Figure 8). Since the tower material is primarily lead with a low modulus of elasticity ($E \approx 1 \times 10^6$ psi), it requires steel sheathing to provide the necessary stiffness. Physics requirements limit sheathing thickness at 0.8 mm for the end 60 cm of the tower and 1.6 mm steel sheathing for the remainder 1.90 m. Preliminary calculations indicate that a single tower in a cantilever position would deflect about half a centimeter under its own weight with stresses in the sheathing reaching about 8-10 ksi. This deflection can be significantly reduced to less than one millimeter by connecting the ends of towers in a cone formation (see erection procedures). Note also that the cantilever configuration is a worst hypothetical case and that most towers have more favorable orientations and thus would exhibit much less deflection.

The attachment of each tower to the surrounding 2 cm shell is one of the most challenging design details of the entire system. The connection may be achieved by means of four corner inserts (whether angles or bolts) that need firm anchor into the tower "soft" lead. These details will demand special attention and will require prototype and testing.

While the shell plate undergoes circumferential and longitudinal direct stresses from shell action it has to resist local bending in some areas due to the attachments of heavy towers. The 2 cm thick shell can be analyzed as a "flat" plate supported by rings (1 m apart) and longitudinal reinforcements (1.8 m apart). Because of the many holes required for the exit of the fibers bundles the plate carrying capacity is significantly reduced. Neglecting shell action (that is assuming a flat plate) a 1 mm deflection can be expected. Stresses including stress concentration factor of 2 (at holes) will reach about 12 ksi which is much larger than the 1 ksi

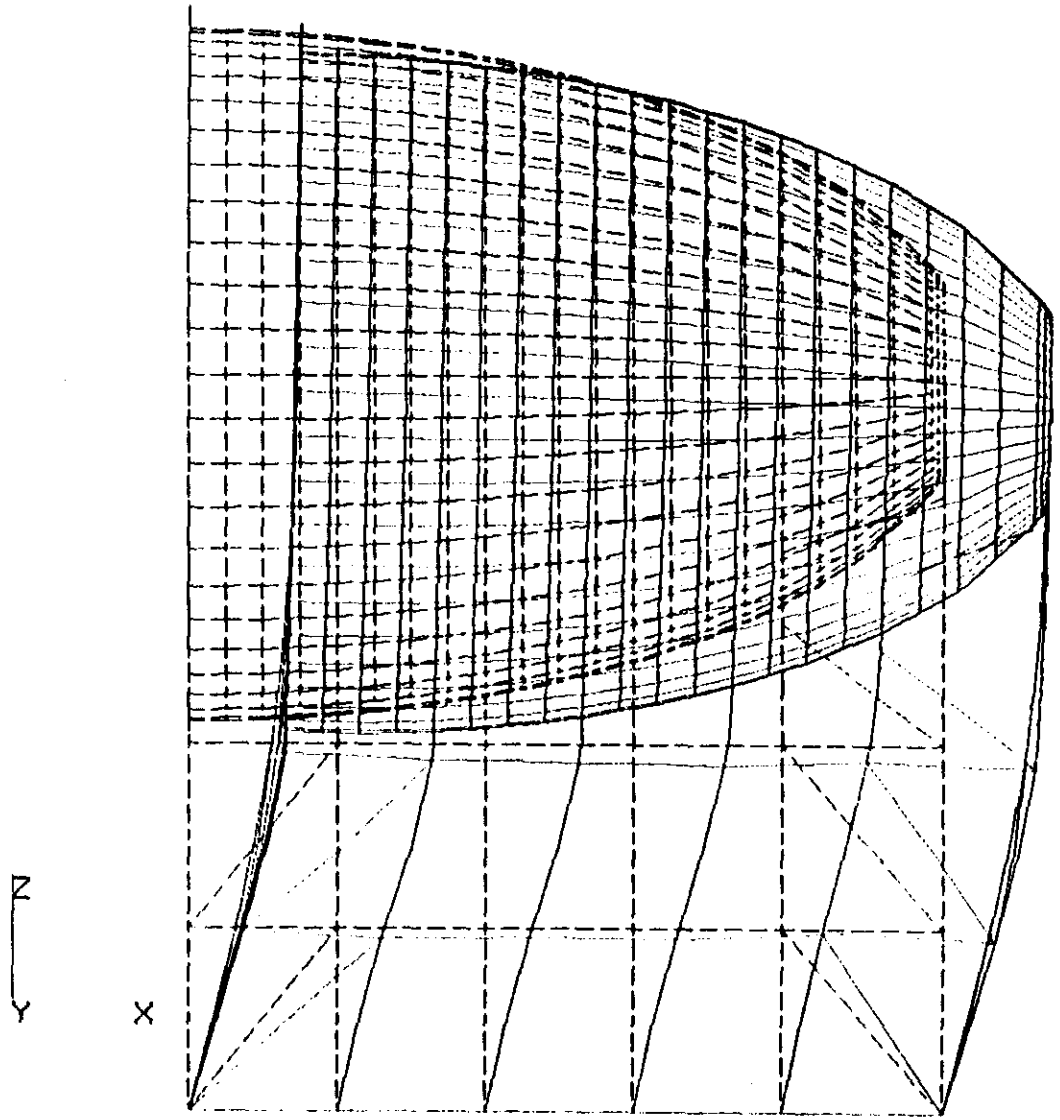

Figure 23 **Structural Distortions due to 0.1 g Acceleration in x - Direction (Applied Statically)**

associated with overall shell behavior. In any case the maximum combined stresses in the shell plate are acceptable at less than 15 ksi. If deflections are not acceptable they can still be compensated by judicious tempering of manufacturing dimensions or later adjustment of tower connections to the shell. It is important also to keep stresses at a "reasonable" level (15 ksi is about half the allowable) so as to minimize the effects of creep that could with time affect the dimensionality of the calorimeter.

6. Technical Issues and Further Developments

There are a number of technical issues involved in the design, transport, assembly and installation of the calorimeter that should be the subject of further investigation. Central to these investigations is development of a final calorimeter design concept based on the criteria of performance and build-ability. When the general design concept is finalized an outline assembly procedure can be written and concepts for assembly gages, tooling and handling equipment can be defined.

6.1 Tower Casting Concepts and Tolerances

Certain studies must be pursued before the design concept can be finalized with confidence. One set of studies would be to gain a full understanding of the physical properties of cerrobend, the tower material. Long term growth data should be acquired or reliably extrapolated and long term creep of cerrobend under load should be investigated. It is anticipated that the towers will be cast in sheet metal sheaths which are trapezoidal in cross section. It should be determined if the growth of cerrobend will cause the sides of the trapezoid to bulge, and if so, how the bulging can be avoided. Trial casting several towers is a way of evaluating this effect. If a complete cone of towers (128 towers) were cast, some assembly procedures could be confirmed.

There are advantages to casting each of the 60 "cones" in one piece rather than building the cones up out of 128 towers. The feasibility of this idea should first be studied from the point of view of scintillating fibre placement. If fibre placement is feasible, trial castings should be made. Two types of trial castings could be made, one would be a 36 degree section (one eighth) of a full size cone. Because the sample would be full size, geometry effects and cooling characteristics would not have to be scaled. A second type of casting would be a one-tenth size full 360° cone. This would give an insight into the issues of casting a full closed cone.

With these and other tests accomplished, a workable design concept would evolve. As the design concept comes into focus, attention should be directed to the important issue of tolerance accumulation. This issue is vital to achieving 100% hermeticity. The in-depth study of the effect of tolerance build-up should consist of four parts:

(1) Develop realistic tolerances for major components. For example, methods for manufacturing the tower sheaths should be investigated with the goal of determining how precisely the cross sectional dimensions of this formed part can be controlled. Also, construction methods of the module ring would have to be investigated to determine if as-welded tolerances are adequate or is post-welding machining required. This decision, in turn, will be the outgrowth of a study into the accuracy of practical welding jigs.

(2) Assess the effects of these realistic tolerances and their accumulation on the construction, assembly, pointing accuracy and hermeticity of the calorimeter.

(3) Devise methods for compensating for or negating the tolerance errors and their effects. For example, "correction" towers and "correction" cones have been mentioned. These and other schemes for dealing with tolerance build-up could be pursued.

(4) Devise inspection procedures and gaging to verify that the required dimensions have been met.

6.2 Calorimeter Construction Issues

Future efforts should include a preliminary investigation into the task of separating the calorimeter halves and remating them with the required accuracy. The use of Hilman rollers and other heavy duty moving equipment needs to be analyzed.

Specific issues peripheral to the actual construction of the calorimeter must be studied and specifications finalized. The issue of where various components of the calorimeter and its support structure would be constructed should receive detailed attention. These issues include decisions on which assemblies or subassemblies would be built remotely and shipped to SSC, which would be built on-site above ground, which on site in the hall and which would be built in place.

Related to where equipment is built is the matter of facility requirements, and services available. Studies leading to definition of minimum hall size, minimum hall access size (from the surface) and location, hall floor loading requirements, floor level specifications, and floor and wall anchor bolt pull-out are required. Storage requirements for uninstalled equipment also need to be determined.

Truck and rail services from the port of Galveston should be investigated. This study will yield maximum shippable length, width, height and weight parameters. Maximum crane loads must be identified and service requirements such as electrical power and compressed air will be estimated.

6.3 Design Finalization and Optimization

The objective of the evaluation was to design a plausible structure to support the calorimeter in its final configuration. With a finite element model structural distortions and stresses have been shown to satisfy structural performance and integrity under gravity loads. Since gravity is the predominant loading and is "well known" the structural system lends itself nicely to optimization. In an iterating procedure, it is possible to reduce the amount of material needed and redistribute it judiciously within the structural configuration while both deformations and stresses can decrease at the same time. The preliminary design suggested in this study is only a point in the solution space and significant improvements can be expected by exploiting optimization procedures. In the process of optimizing structural efficiency, the dimensional and configuration requirements will be treated as constraints. For example the width of the central longitudinal frame should be minimized and it will be limited to 10 cm in the next design cycle. Additional posts (more flexible now) will be required but much lower axial loads are expected and will preserve lateral stability. Other variables in the process include shell thickness, ring spacing and cross sectional properties, longitudinal reinforcement shapes and locations and attachment of the ellipsoidal shell to the frames. As illustrated by the deformations of the structural support under gravity (see Figure 21), the relative stiffness of the end frames and longitudinal bracing frame play a critical role in distributing loads and thus affecting distortions and stresses. As a result the frame design parameters are recognized as the most significant or perhaps critical variables in the structural support optimization process.

6.4 Local Structural Problems

Once the overall design concept matures and satisfactory structural performance is realized a number of localized structural problems need to be addressed. A few examples are given below:

- Shell plate local bending from tower supports
- Shell - supertower connection, alignment method
- Shell connection with rings and reinforcements
- End rings to shell attachments
- Frames connection of shell reinforcements and rings
- Frame base plates and attachments to concrete base

The evaluation of these structural design details might require finite-element models and analyses, but in the end design decisions could be imposed by erection procedures, practical reasons and coordination with the intricate electronics networks requirements and available space management.