SSCL-N-722
June 8, 1990
SI-AP-010

Summary Report of Working Sessions on Bent Crystal Beam Extraction for the SSC

by Working Session participants
(see appendix)

INTRODUCTION

During the period 29 May - 1 June 1990, a series of working sessions on the subject of the extraction of low intensity beam from the SSC using a bent single crystal were held at the SSC Laboratory. In this report, we summarize the issues and results of these working sessions. A list of participants is given in the appendix.

The application of the phenomenon of charged particle channeling in single crystals to beam optics in high energy physics has been a topic of research for more than ten years. The deflection of a beam by a bent crystal has been demonstrated in several experiments.[1,2]. An extracted beam in the SSC could serve fixed target experiments in tandem with collider operations. There are several interesting applications of such a beam. Extraction of 1×10^8 protons/sec would serve a fixed target B physics experiment with an expected production rate of B's of 2×10^{10} to 10^{11} B's/yr. The detector physics would also be less complex. Smaller extraction rates would be useful in hyperon physics and also as test beams. The operational philosophy which underlies the concept is that a fixed target capability that runs parasitically with high luminosity operation and which makes for interesting physics is worth pursuing. In this regard, it is worth noting that the land parcel needed to contain the muon vector from a fixed target facility is included in the SSC footprint.

We begin with a very brief discussion of the physics of channeling in order to define terminology. The fit of an extraction line in the east utility straight and the implications for the channeling physics is then described. We then discuss the production of the halo and its potential as the source of extracted protons. We conclude with a discussion of areas which require further attention and suggestions for research.

CHANNELING PHYSICS

The channeling of charged particles in crystalline solids is now a mature subject in materials science.[3,4] The essential idea is that a particle which is moving through a crystalline solid in a direction that is very close to that of a major symmetry axis or plane will make correlated scatterings from the atoms in the lines or planes. Because the scatterings are correlated, the projectile can be guided between the planes or rows. The guiding can be described by an effective potential for channeling. This is obtained by an averaging over the potential of the atoms making up the lines or planes. The atomic potentials are typically treated by some choice of statistical model. The scaling laws describing the channeling are found to be insensitive to the particular choice of model usually differing only by numerical factors of order unity. For planar channeling, the particle effectively makes betatron-type oscillations in the channel well. For the purpose of extraction using a bent crystal, only planar channeling is of interest and all subsequent discussion will only pertain to that.

If the angle which the particle makes with the channeling plane becomes too large, its kinetic energy will exceed that necessary to keep the particle in the potential well. In this case, it will move through the crystal across the planes and, in effect encounter atoms at random, thus seeing the crystal as essentially an amorphous solid. The parameter which measures this effect is called the critical angle (or channeling angle) and scales as $\psi_c = K/\sqrt{p}$. Here p is the particle momentum and the constant K, depends on the specific crystallographic planes, the crystalline material, and, as mentioned earlier, to some extent, the atomic model. For channeling in the (110) planes of Si, the value of K is about 1.5×10^2 μrad-$\sqrt{\text{GeV}}$ and thus at 20 TeV the critical angle is approximately 1 μrad.

In a bent crystal, the particle is subject to the centrifugal force in addition to the channel potential. This has the effect of skewing the channel potential and particles can escape over the lower edge of the well. This is referred to as bending dechanneling although it occurs within a channeling betatron wavelength of the entrance to the bend and is more precisely a channel acceptance phenomenon. There are several theoretical treatments of bending dechanneling[1,5].There are no simple scaling laws to describe the results. The theories typically involve numerical evaluation but the bending dechanneling depends, for a given channel, only on p/R where R is the radius of curvature of the channel. Bending dechanneling has been observed in experiments[6] and reasonable agreement with theory is found. In some, substantial bend angles have been achieved. Experiments at IHEP have deflected beams of 70 GeV protons through 80 mrad. With the long crystals used, normal dechanneling, discussed below, is also important at this energy. Because a goniometer was not used to position the direction of the channel relative to the beam, the crystal was cut on the bias to insure that some part of the beam and channel would be aligned. This itself reduces the channeling efficiency. Altogether 1×10^{-4} of the beam was deflected by the bent crystal and this value is consistent with theoretical expectations.[2] In this experiment, the whole beam is extracted in a slow spill and directed onto the crystal in an external beamline as shown in Fig. 1. The crystal bender is shown in Fig. 2. We will discuss the bending dechanneling to be expected in the fixed target extraction when we discuss the extraction line in the east campus utility. This defines the bend angle and we can give some meaning to the numbers.

There are two other processes which affect the channeling of particles. Particles moving in the channel scatter from the valence electrons which essentially form a gas pervading the lattice. This multiple scattering can dechannel the particles. However, it decreases rapidly with increasing particle momentum. For the 20 TeV protons of the SSC and for crystals of the lengths of interest this so-called normal dechanneling is negligible. There is also a surface acceptance effect which comes from the fact that the atoms making up the "walls" of the channel occupy some fraction of the channel volume, a part of which arises from lattice thermal vibrations. Particles which strike the surface here may not channel. This could be as much as 20 per cent of the channel area. However, there are effects which can mitigate against this in the extraction from a storage ring. Because it is not germane to channelling in general, we defer its discussion until the next part.

EXTRACTION LINE

The extraction line is illustrated in Fig. 3a. The position of the crystal is schematic. Here, a horizontal dogleg is inserted in the 500m drift space in the east campus utility straight. The bent crystal is set at the edge of the beam $\approx 5\sigma$ in x and channels the large amplitude particles there. This is illustrated in Fig. 3b. The channeling planes are perpendicular to the y-axis. The bend is in the vertical direction and kicks the particles into the field free region of a Lambertson as shown in Fig. 3c. The deflection angle is less than 100 μrad.

As we observed earlier,the definition of the extraction line has implications for the channeling physics. The first issue is the beam divergence. In our brief discussion of channeling physics,we saw how the angle of a particle trajectory relative to the critical angle determined whether a particle would be channeled. In the extraction dogleg, the beta function determines the beam divergence with the beam emittance fixed. For our extraction geometry, it is β_y that is relevant here. At no point in the east campus utility drift space is it less than 500 m. Consequently, the rms divergence should be less than half of the 1 μrad critical angle throughout the drift space. In this case virtually all of the particles which strike the crystal should lie within the critical angle.

The next issue is the bending dechanneling. For protons of a given momentum, the bending dechanneling is determined by the radius of curvature of the crystal bend. The bend angle is set by the extraction geometry. The angular deflection required is modest even for 20 TeV protons. In this case, since the angle is fixed, the radius of curvature depends only on the the length of the crystal. Particles which do not channel can make nuclear interactions in traversing the crystal. In order to minimize background, the crystal should be as short as practicable. However, shortening the crystal reduces the radius of curvature and consequently increases the bending dechanneling. We have taken a 3 cm long crystal as a reasonable tradeoff. The bending dechanneling is expected to be about ten per cent or smaller. The crystal is about six percent of an interaction length.

Particles which are dechanneled or which impact the crystal sufficiently near a lattice plane are not channeled and traverse the crystal as if it were amorphous. However the atoms are not opaque to the 20 TeV protons and most will pass through the crystal. In bending experiments which are done in an external beamline these particles are lost. However, the extraction line is in a storage ring and the particles which are not channeled and therefore not bent remain in the machine aperture can be captured in a channel on a subsequent pass around the ring. This has been seen in computer simulations[7] where channeling efficiencies of about ninety percent were observed. Thus, the extraction effieiency of about 70% expected from theory, in this context, may be conservative.

There are several additional issues which impact the extraction but are not related to the channeling process *per se* . One that has been cause for some concern has been the cutting accuracy of the face of the crystal parallel to the channeling planes, the "long" face of the crystal. Some small misalignment of the face and the crystallographic planes is inevitable. For a bend with a radius in the plane parallel to the axis on which the crystal is placed, this defines an effective septum width in the language of conventional extraction techniques. In the case of the crystal, particles whose displacements are smaller than this distance will strike the back of the crystal. A bending radius in the plane perpendicular to the axis on which the crystal lies does not have this problem. Then the displacements which put particles onto the crystal are parallel to the channeling planes. One need only polish the edge perpendicular to the channeling planes and this can easily be done with sufficient accuracy. Thus, for a horizontal dogleg with a vertical kick into the field-free region of tne Lambertson, the crystal is set on the x-axis. There are other mechanical considerations. We have shown a crystal thickness of 3mm. There is nothing to determine this *a priori*. This crystal is thicker than is typically used in bending experiments, but our bend angle is an order of magnitude or more smaller. For such a small bend angle, it was thought a thin crystal would be difficult to mechanically handle. The bending stress, for a given radius ov curvature increases with thickness but still is very small relative to the breaking stress. Finally, there is the issue of heating of the crystal. If we assume that the efficiency is 70% and or rate is 1×10^8/sec, the power into the crystal is about 10^{-5} W or about a Joule/day. For the size crystal considered, this corresponds to a temperature rise of approximately 6 degrees/day in the absence of any heat loss. Obviously, this is an extreme assumption and the temperature rise does not seem excessive. Perhaps a more important question is the differential heating of the crystal. Differences in temperature may sufficiently distort the crystal to affect its alignment. This will have to be considered in the engineering of the crystal manipulator. However, how the differential heating may occur depends on the phase space of the particles to be extracted. This is still an open issue as will be seen in the discussion we now take up. Based on experiment[8], radiation damage is not considered to be a problem at this low level of beam intensity.

HALO DEVELOPMENT

The original concept of extraction of a low intensity beam from the SSC for fixed target experiments looked to the forward-peaked, quasi-elastic scattered halo from the high-luminosity IRs to provide the source of particles. This mode of operation allows a fixed target run while beams are colliding. It appears that the numbers of such particles that are produced in the IR and survive the transport through the lattice to the crystal located in the east campus utility are not sufficient to sustain a rate of 10^8/sec. They are adequate for the 10^6/sec for test beams. However, scattering in the IRs is not the only source of halo. Recent results just presented here indicate that the beam-gas scattering (diffractive, elastic and Coulomb) from the residual gas in the beam pipe (due to synchrotron radiation, which is unique to the SSC) is the major contributor to the halo. Shown in Fig. 4 is a plot of the number of halo protons/sec at the utility straight whose amplitudes lie within the interval (A_0,A). A crystal placed with its edge at A_0 will intercept all of that fraction of protons whose phase space has displacements between A_0 and A. The rates are summarized in Fig. 5. It seems that 2-3x10^7 protons/sec in the halo could be available; perhaps more depending on the crystal position. One could also increase the phase space area of the halo exposed to the crystal by using a pair of crystals; one on each side of the beam pipe. The phase space of these particles needs to be investigated further. The elastic collisions will produce x and y oscillations with equal probability and, in the subsequent evolution, the two degrees of freedom are largely independent. A horizontal crystal will therefore not be too effective to extract vertically scattered protons. On the other hand, that part of the diffractive component whose momentum differs sufficiently from the nominal can be put on the crystal by introducing a finite dispersion in the extraction dogleg. This technique could also be used to extract the tail of the energy distribution of the normal beam ($\approx 5\sigma_\varepsilon$). would reduce the longitudinal emittance. This could be repopulated by introducing a controlled amount of noise in the RF. It has been suggested, the RF alone, without noise may be sufficient by itself. Ideas to blow up the beam halo by a foil, or to move the beam slowly across the crystal were mentioned but not discussed in detail in the working sessions.

SUMMARY

An extraction dogleg using a bent Si crystal that fits in the existing east campus utility has been defined. The geometry places modest demands on the crystal and one expects from theory that the extraction efficiency will be good. Experiments done at existing accelerator facilities on beam bending have served to build our confidence in the theories. Because these experiments have been done in external beamlines, there has been no opportunity to test the concept of multi-turn capture. Furthermore the emittance of these beams is large and there have been no experiments of which we are aware in which the beam divergence is comparable to the critical angle at least in the momentum regime of interest here. Such an experiment would be valuable.

Mechanical requirements of a crystal manipulator are comparable to those already attained in crystallography research.

The most significant gap in understanding is in the evolution of the large amplitude halo. This information is critical in knowing the extraction rates which can be expected. The mechanisms one might adopt for putting these particles on the crystal also depends on the properties of the halo. In the course of investigating the halo evolution, it is reasonable to consider ways in which the halo might be augmented up to the 1-2 x 10^8/sec level if this will make good physics accessible.

REFERENCES

1. R. A. Carrigan, Jr., in *Relativistic Channeling*, edited by Richard A. Carrigan Jr. and James A. Ellison (Plenum, New York, 1987) pp.339-368.
2. E. Tsyganov, Personal communication, May 1990.
3. Donald S. Gemmell, Rev. Mod. Phys. **46**, 129 (1974).
4. V. V. Belotshiky, F. F. Komarov, and M. A. Kumakov, Phys. Repts. **139**, 293 (1986).
5. J. A. Ellison, Nucl. Phys. **B206**, 205 (1982).
6. J. S. Forster, H. Hatton, R. J. Toone, G. Este, S. I. Baker, R. A. Carrigan, Jr., W. M. Gibson, R. L. Wijayawardana, J. A. Ellison, L. Emman-Wori, and B. O. Kolbesen, Nucl. Phys. **B318**, 301 (1989).
7. A. M. Taratin, S. A. Vorobiev, M. D. Bavizhev, and I. A. Yazinin, "Computer simulation of the multi-turn beam extraction from accelerators using a bent crystal", preprint (in Russian).
8. S. I. Baker, in *Relativistic Channeling*, edited by Richard A. Carrigan Jr. and James A. Ellison (Plenum, New York, 1987) pp. 391-397.

ACKNOWLEDGMENTS

The possibility of the extraction of a beam at the SSC has had several faithful champions who have nursed the concept along for a number of years. We would like to acknowledge their contributions. These include R. A. Carrigan, Jr., C. T. Murphy, T. Toohig, R. J. Stefanski, and B. Cox.

APPENDIX. Participant List

E. Tsyganov (co-chair)	JINR
Yu. Budagov	JINR
N. Mokhov	IHEP
A. Drozhdin	IHEP
A. Chao (co-chair)	SSCL
J. Shih	SSCL
W. Chou	SSCL
J. Ellison	UNM
B. Newberger (secretary)	UT-Austin

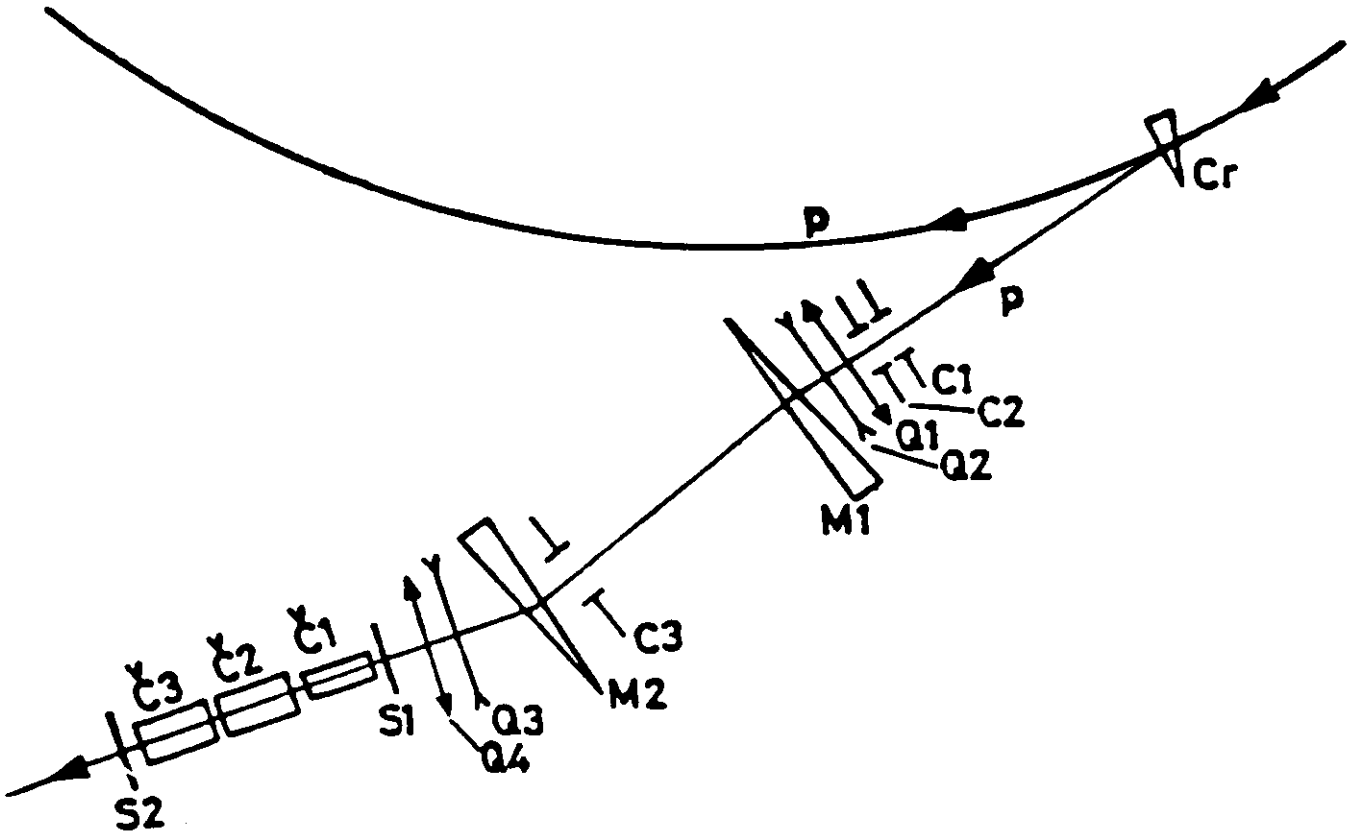

Figure 1. IHEP 80 mrad crystal bend experiment, schematic

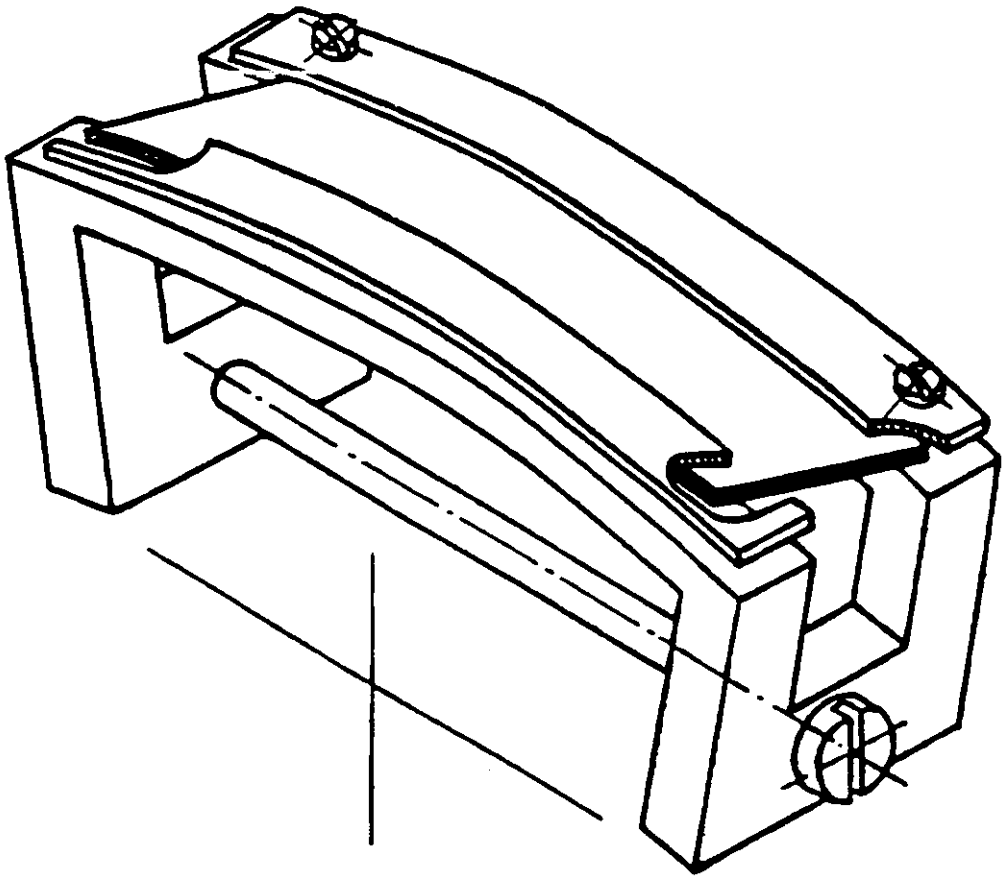

Figure 2. Crystal holder at IHEP crystal bend experiment.
The shaded edge illustrates the bias cut edge.

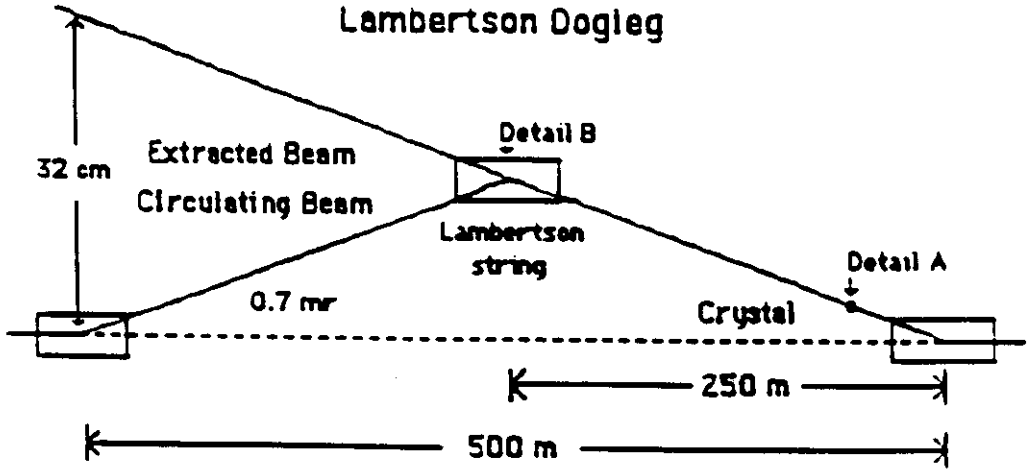

Detail A

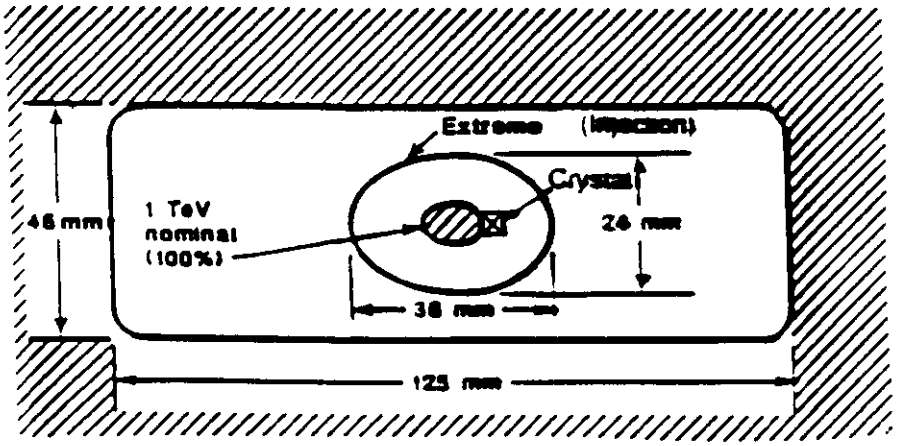

Detail B

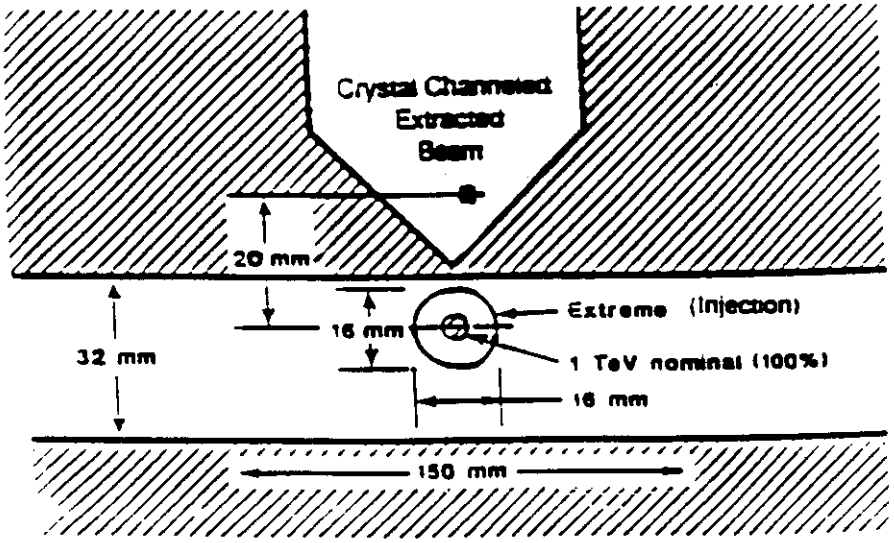

Figure 3. Extraction geometry, east cluster utility.

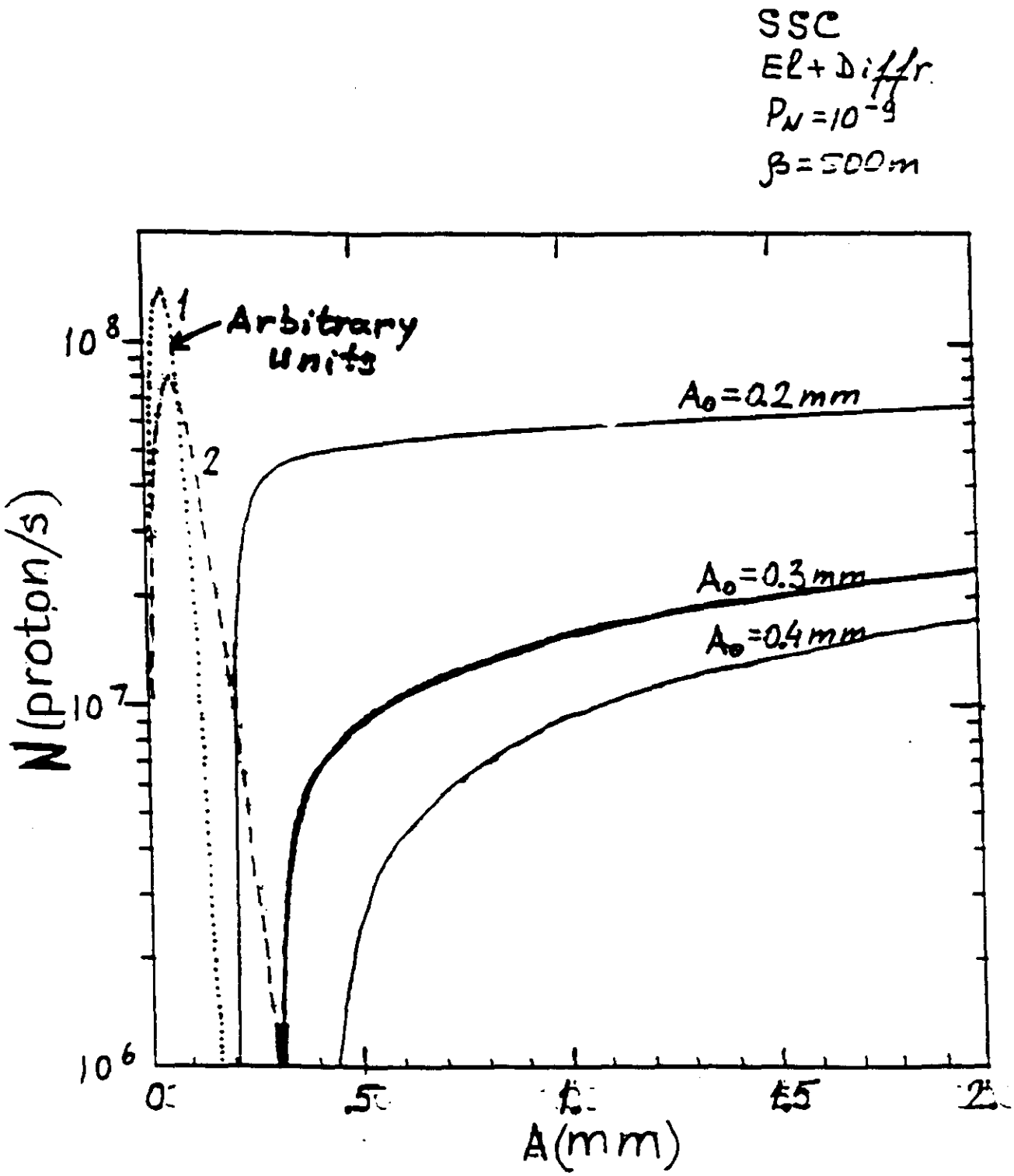

Figure 4. Halo rate as a function of amplitude at β = 500m. Three values of the lowest limit of the amplitude interval are shown.

HALO GROWTH RATE
IR's and Beam-Core Interactions

5/30/90
N. Mokhov

Crystal at $A = 5\sigma$, $L = 10^{33}\ cm^{-2}s^{-1}$

$N_{\phi} = N_{IR}.2.10^{6} p/s$

	Gas	Pressure (Torr)	L(km)
Cold	H_2 CO CO_2	10^{-8} 10^{-10} 2.10^{-11}	76.14
Warm	N	10^{-9}	10.98

$$N_2 = \underbrace{1.6.10^{7} + 2.6.10^{6}}_{\text{cold}} + \underbrace{3.9.10^{6}}_{\text{warm}} = 2.25.10^{7}$$

diffel Coulomb total

If $N_{IR} = 2$, $N = 4.10^{6} + 2.25.10^{7} = 2.65.10^{7}$ p/s

Figure 5. Summary table, beam-gas halo