ACCELERATOR
SSC REPORT DISTRIBUTION

Author: Cezary Jach

Number: SSCL-N-700 / See SSCL-267

Title: Low Energy Booster Resonant Power Supply System

Date: March 19, 1990

Distribution:

H. Edwards
Bob Sheldon
Don Edwards
Chris Saltmarsh
Richard Talman
Mike McAshan
Alex Chao
Larry Sauer
Gerry Tool
Wiley Guinn
Cezary Jach
Jeff Gannon
Ray Harold
Tong Chen
L. K. Chen
Samir Dutt
Narayan Mahale
Yiton Yan
George Bourianoff
David Johnson
Cleon Manz
S. K. Kauffman
Mike Syphers
Theodore Garavaglia
Rae Stiening
Stuart Stampke
Shaul Abramovich
Ruben Carcago
Ben Cole
Hsien-Ching Lue
Mike Allen
Miguel Furman
H. Foelsche
Hsiuan-Jeng Shih
Dan Hutton
Robert Skegg
Keng Low
Ellie Lai
Cameron Owen
Gustavo Lopez
Cyrous Rostamzadeh
Frank Meyer
Rao Ganni
Deepak Raparia
P. Ravishankar
John Skaritka
Roy Cutler
Chris Pappas
Dave Evans
Liana Baritchi
Chu Rui Chang
Jack Peterson
David Neuffer
Jerry Watson
Garry Trahern
Ted Niehaus
Ed Faught
Don Martin
Scott Miller
Jiasheng Zhou
Joseph Rasson
Steve Lesser
L. K. Mestha
Al Garren
George Karady

LOW ENERGY BOOSTER RESONANT POWER SUPPLY SYSTEM

Cezary Jach 02/15/90

INTRODUCTION

During the particle-acceleration period, the magnet guide-field intensity along the equilibrium orbit must rise from a minimum field (corresponding to injection energy) to the peak field at which the protons attain their maximum energy. The field must then be reduced to its minimum value and the cycle repeated. This operation is achieved by excitation of the guide-field magnets with a 10 Hz sinusoidal waveform, which is biased by superimposing a dc component on the ac component excitation, giving a field variation of the form:

$$b(t) = B_{dc} - B_{ac} \sin(2\pi f t) \qquad (1)$$

where f is the magnet excitation frequency (nominally 10 Hz). Aside from saturation effects in the magnets and chokes, b(t) may be considered as a linear function of the magnet current (design of network magnetic elements should not allow more than 1% saturation, i.e., peak field should not exceed 1.25 T). With this assumption, the magnet power supply generates a current of the form (Fig. 1)

$$i_m(t) = I_{dc} - I_{ac} \sin(2\pi f t) \qquad (2)$$

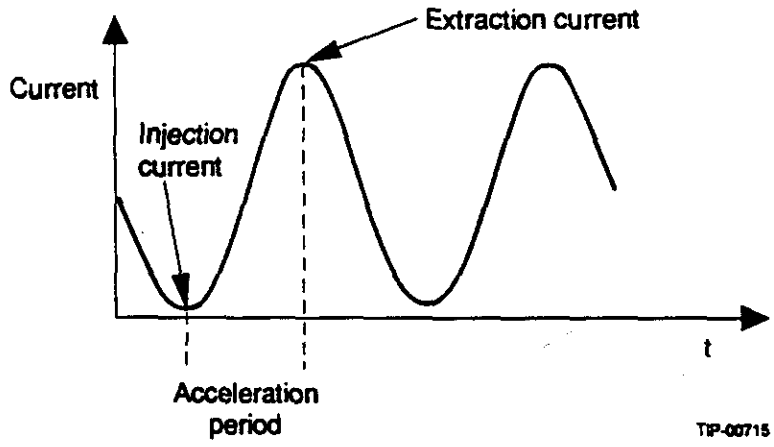

Fig. 1: Magnet Current Waveform

RESONANT MAGNET NETWORK

To ensure accurate tracking between dipoles and quadrupoles during the acceleration cycle, the magnet lengths and coil configurations are chosen so they can be driven from a common current supply. The coils have relatively few turns, to keep the magnet induced voltage within manageable bounds. The biased excitation requirements are detailed in Table 1.

Table 1. Power Supply System Parameters

Number of dipoles	84
Number of quadrupoles	108
Total winding resistance (@40°C)	0.390 Ω
Total bus work resistance(@40°C)	0.170 Ω
Total choke dc resistance (@40°C)	0.094 Ω
Maximum field at equilibrium orbit	1.23 T
Maximum field gradient	16.5 T/m
Dipole turns/pole	8
Quadrupole turns/pole	3
Dipole inductance at peak field	3.07 mH
Quadrupole inductance at peak field	0.26 mH
Magnet current, peak	3745 A
Magnet current, rms	2294 A
Magnet current, dc component	1872.5 A
Magnet current, ac component, peak	1872.5 A
Total peak magnet stored energy	2.0 MJ

The design of the magnet -network configuration is influenced by two factors:

- the need to avoid drawing a large reactive power from the magnet ac excitation excitation source,
- the maintenance of equal currents and hence a uniform field intensity in all dipole and quadrupole magnets.

The magnet reactive power of some 63 MVAR can be excluded from the excitation source by using a magnet circuit which is resonant at the accelerator operating frequency (10 Hz). This resonant circuit must be designed to provide a path for the dc bias and quadrupole magnets.

These basic requirements are satisfied by the simple circuit shown in Fig. 2, in which the magnet inductance L_m forms a resonant circuit with the capacitor C_m and the dc bypass choke inductance L_{ch} forms a resonant circuit with the capacitor C_{ch}. The resonant frequency is given by:

$$f = \frac{1}{2\pi}\sqrt{\frac{L_{ch} + L_m}{L_{ch}\, L_m\, (C_{ch} + C_m)}} \tag{3}$$

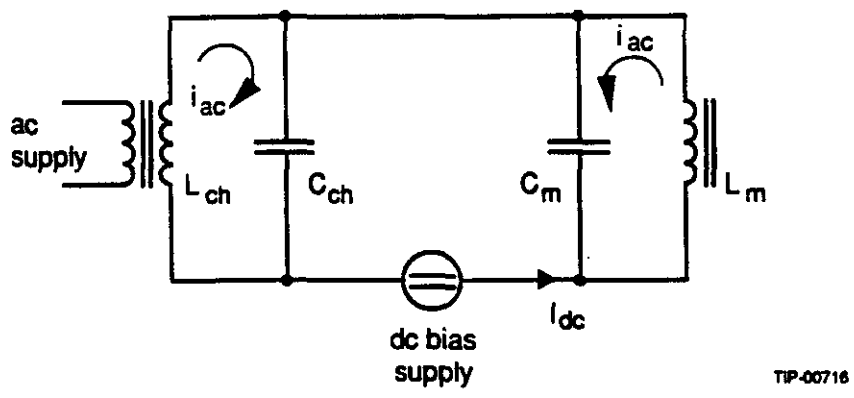

Fig. 2: Simple Resonant Magnet Circuit

It is not possible to utilize such a system for the direct connection of 108 quadrupoles and 84 dipoles, since a simple series circuit, preferable for basic magnet current uniformity, would yield an excessively high induced voltage for the magnet ac component of:

$$\sum_{1}^{84} Vmd_i + \sum_{1}^{108} Vmq_i = 33.6\ \text{kV!}$$

DISTRIBUTED RESONANCE CIRCUIT

The dipoles and quadrupoles are connected as shown in Fig. 3, in twelve series groups of 7 dipoles and 9 quadrupoles, together with associated resonant capacitors. Each magnet-capacitor group is then effectively connected in parallel with a secondary winding of the energy storage choke for dc bypass and a choke resonant capacitor. Every other energy storage choke secondary winding is split into two identical halves for the insertion of the dc bias power source. This arrangement assures that the dc bias power source does not see the 10 Hz component of the current. One half of the energy storage choke secondary winding and capacitor form a 10 Hz parallel resonant circuit. Power to make up for the ac losses of the network is fed via primary windings of the energy storage chokes. It can be seen from Fig. 3 that under symmetrical conditions, the ac voltage of each magnet-capacitor group is zero, i.e.

$$L_m \frac{di_m}{dt} + \frac{1}{C} \int i_c \, dt = 0 \qquad (4)$$

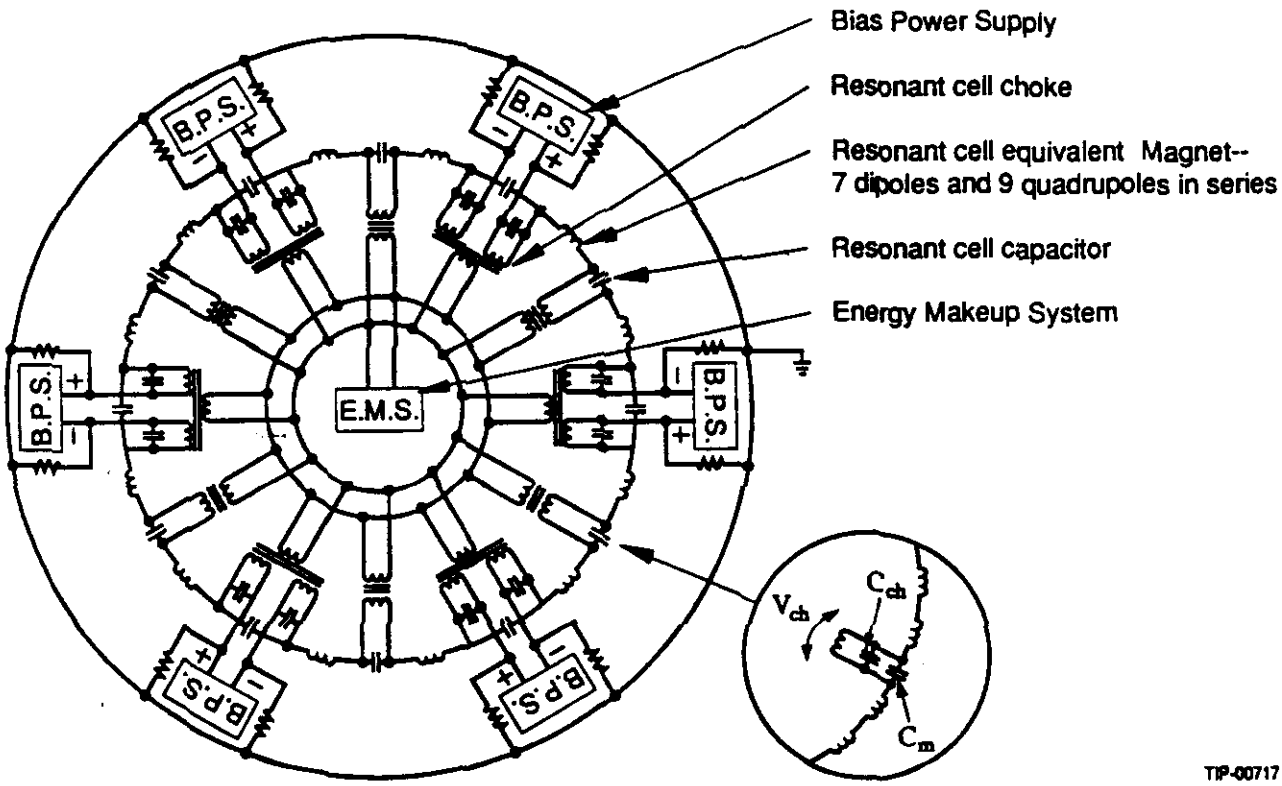

Fig. 3: Twelve Cell Interconnection of Resonant Magnet Network.

Therefore, ac voltage is not cumulative, as would be the case for a simple series connection of magnets based on the circuit in Fig. 2, but alternates around the ring, as shown in Fig. 4. Hence, except for the presence of the dc bias excitation voltage, which adds a low positive gradient to the distributed ring voltage, the center points of each capacitor, choke and magnet group are at earth potential (for normal operation). This situation allows the bias power supplies to be inserted into the magnet resonant system at multiple locations. With six such insertions, the maximum dc component of the voltage is about 205 V, lowering magnet dc insulation stress. A distributed ground system is used to detect ground faults. All terminals of the bias power supplies are tied to a common wire via 50 kΩ resistors. The common wire runs all the way around the ring and is terminated to ground via current sensing circuit. If the average voltage to ground of all the power supplies is zero, no current will flow from the common wire to ground. If a ground develops, the average voltage to ground will not be zero, resulting in ground current and a trip.

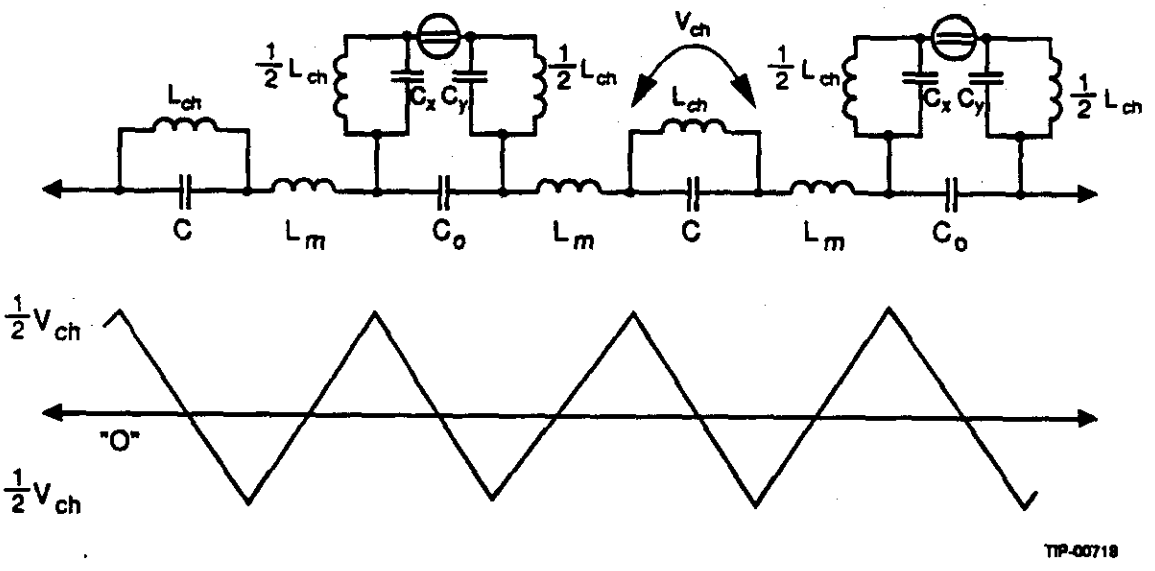

Fig. 4: Resonant Magnet Network Ac Voltage Distribution

Owing to its series connection, the distributed resonance circuit provides a basic uniformity in magnet currents. The effect of leakage capacitance currents to earth can distort this equality to a degree that is significant in terms of guide field. Hence, since these leakage paths are distributed around the network in a generally uniform manner, it is necessary to ensure that the ac potentials of corresponding points in the network attain a similar identity. This is achieved by close tolerance in the permitted variations of the energy storage choke inductance and resonant capacitor capacitance.

CIRCUIT ALTERNATING VOLTAGE

The choice of the circuit ac voltage is dependent on the total inductance of the series connected magnets in a group.
A good compromise between insulation cost, leakage-current considerations, reliability and circuit complexity is achieved with 7 dipoles and 9 quadrupoles connected in series. This results in total of 12 resonant cells and total magnet group induced voltage of 2800 V peak. Maximum operating voltage to ground is 1400 V peak and 990 V rms.

CIRCUIT DIRECT VOLTAGE

The total dc resistance of the ring at 40°C is 0.654 Ω, therefore an onload dc voltage of 1225 V is required for the maximum excitation condition of 1873 A. This is provided by six 12-pulse SCR type power supplies connected into the resonant magnet network as shown in Fig. 3.

CIRCUIT WAVEFORMS

During resonant operation, the total network stored energy is constant, except for losses, and the magnet stored energy is transferred to the choke and back again once per cycle, with capacitors storing a portion of the peak energy during the transfer.
The magnet resonant capacitance is fixed by the magnet group inductance. The ratio of the choke inductance L_{ch} to the magnet group inductance L_m and hence, the choke resonant capacitance C_{ch}, can be selected to minimize the choke capacitor energy storage cost. The system cost has a minimum when the choke inductance is about 1.5 times larger than the magnet group inductance. Since under symmetrical conditions, the induced voltages across each choke secondary winding and magnet group are identical in amplitude (but reversed in phase), and the dc bias current is common to both, the resultant choke current is

$$i_{ch} = I_{dc} + \frac{L_m}{L_{ch}} I_{ac} \sin(2\pi f t) \tag{5}$$

and the peak choke stored energy for fully biased magnet current ($I_{ac} = I_{dc}$) is

$$W_{ch} = \frac{1}{2} L_{ch} (I_{ch})^2 = \frac{1}{2} (1.5\, L_m) \left(\frac{5}{6} I_m\right)^2 = \frac{25}{26} W_m \tag{6}$$

The current and voltage waveforms of magnets, capacitors and chokes are shown in Fig. 5 and parameters of the resonant network are summarized in Table 2.

Table 2. Resonant Network Parameters

Number of Magnet Groups	12
Induced Voltage Across Each Magnet Group (rms)	1980 V
Alternating Voltage to Earth (rms)	990 V
Inductance Per Magnet Group, L_m	23.8 mH
Choke Inductance (Secondary), L_{ch}	35.7 mH
Choke Current, Peak	3121 A
Choke Induced Voltage/Capacitor Voltage, rms	1980 V
Choke Stored Energy, Peak	173.9 kJ
Capacitance Per Group (standard capacitor), C	17.74 mF
C_x, C_y	14.20 mF
C_o	10.64 mF
Peak Capacitor Stored Energy (standard capacitor)	69.54 kJ
Network ac Power Loss at Maximum Excitation, P_{ac}	1.68 MW

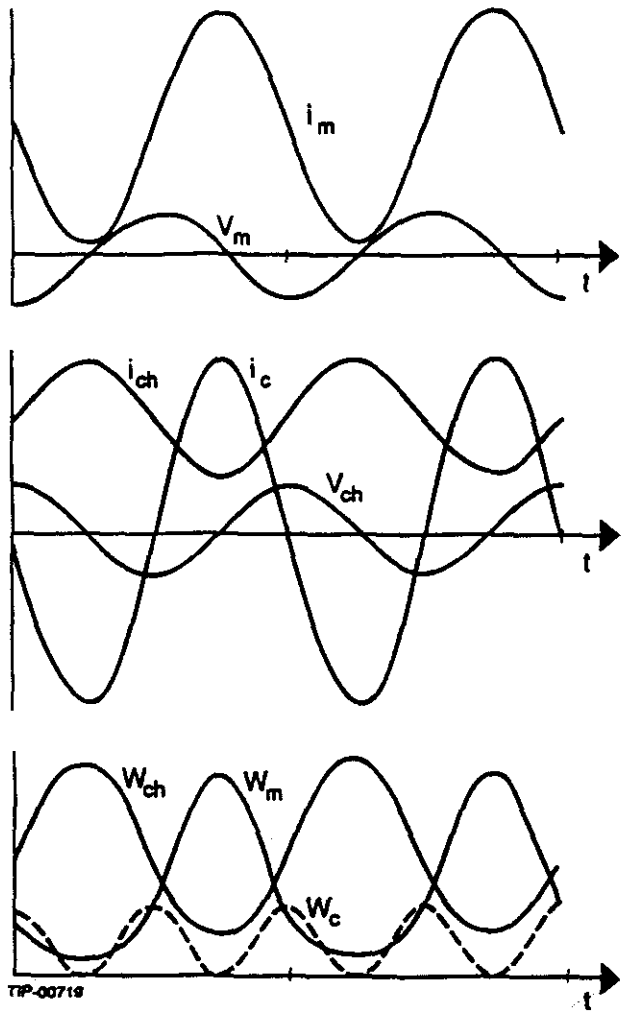

Fig. 5: **Waveforms of Resonant Magnet Network.**

DELAY-LINE MODES

The distributed L and C components exhibit resonant modes that when excited, disturb the uniformity of magnetic field around the accelerator. The particle beam can be either seriously disturbed or completely lost. In addition to the circuit components, the stray capacitances from the elements of the network to earth must be considered. In general, these capacitances are much smaller than the resonant capacitor banks, and resonate with the circuit inductances at a frequency that is appreciably higher than the network fundamental frequency (10 Hz). At these frequencies, the resonant capacitors have a very low impedance, leaving the magnet windings as the only appreciable impedance in the line. While the capacitance from the magnet coils to earth is distributed, there are also appreciable amounts of lumped capacitance from certain parts of the network to earth, particularly at the points where magnet, choke and capacitor are connected, since these links involve long lengths of bus bar. Thus, when considering oscillations involving stray capacitance to earth, it is possible to simplify the circuit of Fig. 3 to that shown in Fig. 6. When some disturbance occurs in one part of the magnet network, voltages are induced across the stray capacitance, and oscillations between these capacitors and the magnets result. The oscillating voltages, and associated currents in the magnets, form delay line modes of resonance, resulting in standing waves along the magnet network. The number of nodes and the frequency of the oscillations depend on the particular harmonic that is excited by the disturbance. Theoretically, an infinite number of harmonics are possible, but in practice it is usually only the mode with the lowest possible frequency (fundamental) together with some of the first few harmonics that are excited. For the circuit model shown in Fig. 6, the magnet current, associated with delay line modes of resonance, at any part of the network is given by:

$$i_m = \frac{\pi V}{\omega L} \cos\left\{\frac{n\pi x}{l}\right\} \sin(n\omega t) \qquad (7)$$

Where:
- L is total inductance of the series magnets;
- l is the total length of magnet windings;
- x is the length from the network earth point to the point under consideration;
- n is the harmonic number of the oscillation;
- ω is the angular velocity of the fundamental mode;
- V is the in standing wave peak voltage.

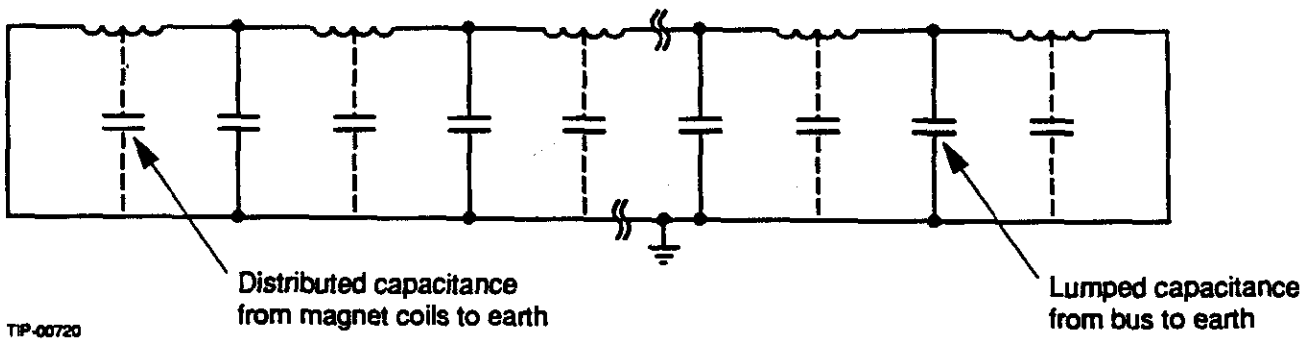

Fig. 6: Simplified Magnet Circuit for Delay-Line Mode Considerations

The frequency of the fundamental mode is given by:

$$f = \frac{1}{2\pi\sqrt{LC}} \tag{8}$$

Where C is the total capacitance from the magnet system to earth.
Assuming C = 1000 nF, L = 285 mH, then f = 300 Hz, and it would take only 60 V of 300 Hz signal for the resultant current to exceed 0.01% of the peak excitation current (LEB field ripple requirement). Techniques for damping these modes are available and will be applied as appropriate.

ENERGY MAKEUP SYSTEM (PULSER)

Under symmetrical resonance conditions, the high Q-factor magnet network presents a purely resistive load to the ac power supply, and has a power requirement of 1.68 MW at the maximum magnet-excitation level. The ac power supply can be one of three basic types:

- a rectifier-inverter set with 10Hz tuned filter, and continuous excitation (BESSY, DESY, Germany)

- a Pulse Width Modulator with GTO (Gate Turn Off) Thyristors, and continuous excitation (ESRF, France)

- a pulse-power supply in which power to make up the a.c. loss is supplied to the resonant magnet network in the form of an impulse, via the choke-primary windings (NINA, England, CEA and SSRL, USA).

The pulse power supply is favored because of its operational simplicity and reliable performance record.

PULSER

The major components of the pulser are shown in Fig. 7. It is comprised of an energy storage capacitor and associated charging circuit, and a pulse discharge circuit triggered from the resonant magnet network. The phase-controlled 3-phase power supply charges the energy storage capacitor C_F via the filter choke L_F to twice the energy storage choke secondary peak voltage V'_{ch} (referred to primary). The thyristor is then triggered to discharge C_F via the pulse choke L_P and the energy storage choke primary, so that the resulting half cycle current pulse i_p occurs approximately symmetrically around the positive peak of the choke voltage V_{ch}. The cycle repeats itself with 10 Hz frequency. It can be seen from the analysis of the pulser circuit that its wave forms are dependent on the values chosen for the frequencies f_p and f_F of the pulse and charging circuits. The most important considerations in this choice are:

- minimum introduced disturbance to the magnet network during normal operation

- acceptable transient-fault levels

- economic circuit-component ratings

- limited fluctuations in mains-supply input power.

On this basis, the selected values are f_F = 2.5 Hz and f_p = 30 Hz. Based on an analysis and given values for the frequencies, the coefficients of peak, minimum and rms currents can be calculated in terms of the average charging current i_F (av):

$$i_F\,(max) = 1.108\, i_F\,(av) \qquad i_P\,(max) = 9.026\, i_F\,(av)$$
$$i_F\,(min) = 0.816\, i_F\,(av) \qquad i_P\,(av) = i_F\,(av)$$
$$i_F\,(rms) = 1.004\, i_F\,(av) \qquad i_P\,(rms) = 2.678\, i_F\,(av)$$

Where $i_F\,(av) = \frac{P_{ac}}{V_s}$, and P_{ac} is the ac power loss of the resonant magnet network. The pulser parameters based on an energy storage choke turns ratio of 1:2 are shown in Table 3.

Table 3. Pulser Parameters

<u>Dc input</u>	
On Load voltage, Vs	1400 V
Power, P_{ac}	1680 kW
Current, average	1200 A
<u>Filter circuit</u>	
Frequency, f_F	2.5 Hz
Inductance, L_F	111 mH
Current, rms	1200 A
Current, minimum	980 A
<u>Energy storage capacitor</u>	
Capacitance, C_F	36.52 mF
Peak voltage	2800 V
Peak stored energy	143 kJ
<u>Pulse circuit</u>	
Frequency, f_p	30 Hz
Inductance, L_p	0.77 mH
Current, peak	10.8 kA
Current, rms	3.2 kA
Current, average	1.2 kA
<u>Thyristor switch</u>	
Conduction period	16.6 ms
Duty cycle	16.6%
Peak forward voltage	2800 V
Peak inverse voltage	-1400 V

MAGNET FIELD CONTROL

Since saturation can be neglected and linear operation is assumed, the quantities B_{ac} and B_{dc} can be controlled by controlling I_{ac} and I_{dc}. The ac component of magnet current is controlled by the pulse power supply feedback system and consists of two principal closed loop systems:

-A magnet ac control loop of slow response, in which a reference is compared with the measured amplitude of oscillation (The amplitude error is characterized by measuring the elapsed time between downward and upward crossings of a field level just above the injection-time value of the field. These crossings are detected using bias peaking strips or other techniques such as NMR probes). The resultant error signal drives the SCR control circuits of the charging power supply.

-A thyristor firing control loop of slow response in which the phase position of the pulser discharge current is compared with the firing phase reference.

The dc component of the magnet current is controlled by the dc bias power supply feedback loop of slow response in which an adjustable reference is compared with a signal proportional to the magnet direct current. The resultant error signal drives the SCR control circuit of the bias power supplies.

ADJUSTMENT OF ACCELERATOR FREQUENCY

During normal operation, the resonant magnet network is excited at 10 Hz. If the pulse is adjusted to occur either in advance or retard of the optimum phase position (symmetrically about the resonant capacitor current zero) a corresponding increase or decrease in accelerator frequency is obtained. In this way, the magnet excitation frequency can be adjusted by +/- 0.1 Hz. Further frequency swing would result in excessive pulse current.

TUNING OF MAGNET RESONANT NETWORK

In order to reduce ac losses, the magnet resonant network is tuned to its resonant frequency. This is done by means of a trimming section of the resonant capacitor bank. Change in capacitance (due to temperature coefficient or aging) in the particular bank can be detected by measuring the primary current of the bank's energy storage choke which the bank is connected to. A change of capacitance of 1% of its nominal value, results in a change of a factor of two in the choke's primary current amplitude, which can be easily noticed.

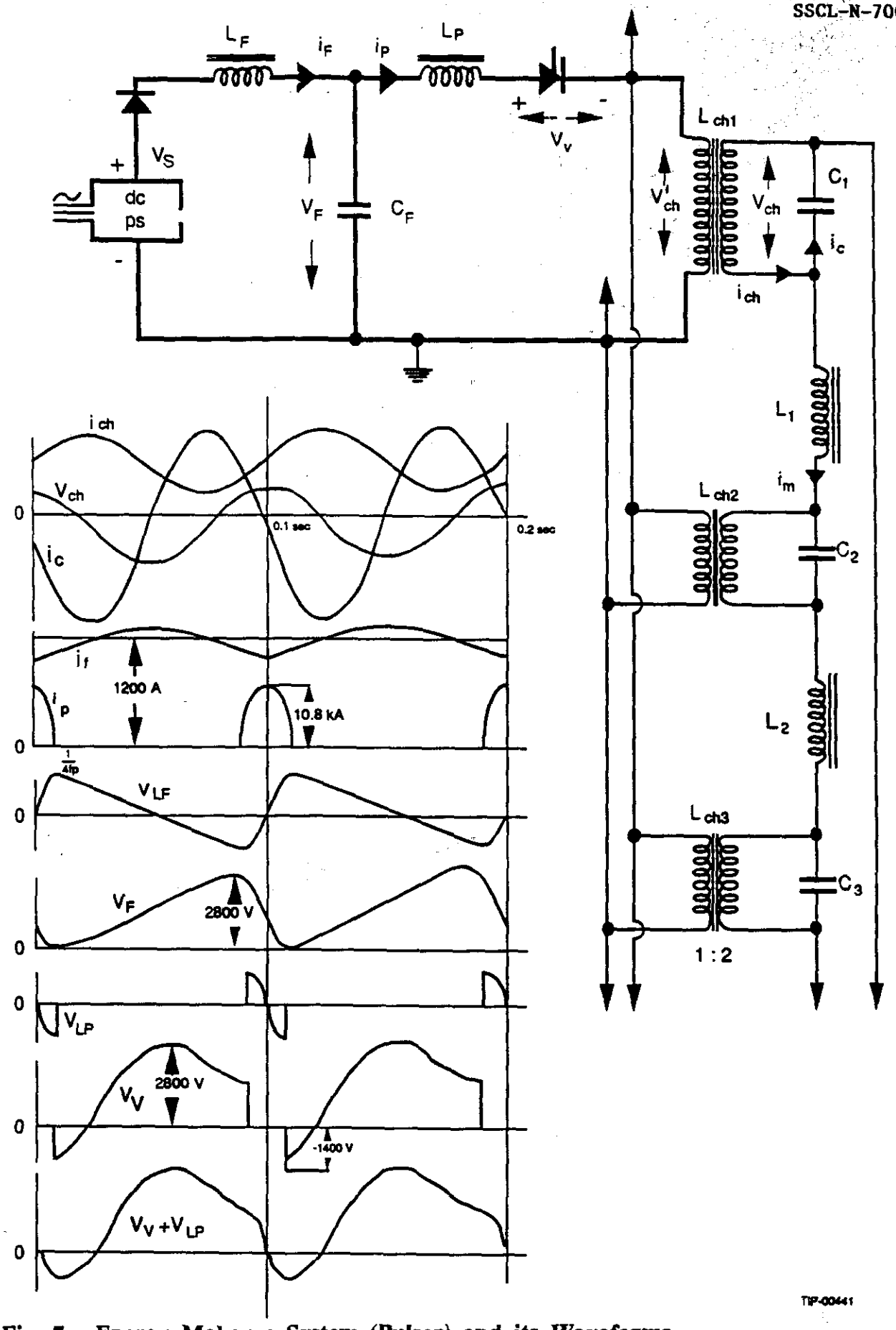

Fig. 7: Energy Make-up System (Pulser) and its Waveforms