SSCL-N-695
SC-MAG-277

SSC/LBL

ANSYS BOUNDARY CONDITION FOR TWO-DIMENSIONAL MAGNETIC FIELD ANALYSIS

Robert B. Meuser
February 10, 1990

The ANSYS finite-element program is being used increasingly for the calculation of the magnetic field of accelerator magnets. However, ANSYS cannot represent correctly air extending to infinity, and that limits the accuracy. ANSYS can handle only Dirichlet (flux parallel to surface) or Neumann (flux normal...) boundary conditions at a finite distance from the magnet. Jackson Laslett doped out a way to fix this, and his fix has been applied to the TRIM and POISSON programs. I sent Swanson (ANSYS's manufacturer) Laslett's stuff, with a suggestion that they incorporate something similar into ANSYS, but I don't imagine it will get done tomorrow. Meanwhile....

Of course one can get any desired degree of accuracy by using a sufficiently large boundary radius or by various tricks. But that increases the number of nodes, the memory requirement, the running time of the computation, and if the tricks are used, more effort on the part of the analyst.

Here is a possible fix: Using a reasonably small boundary radius, make runs with both Dirichlet and Neumann boundaries, then average the results. The average is much more accurate as to both the magnitude of the aperture field and its spatial variation than either condition alone. Seems dumb, but it apparently works.

Last spring Mike Chapman used ANSYS to analyze the field produced by two overlapping current cylinders (Ref. 1 and Fig. 1). With no iron yoke, such a configuration produces a perfect dipole field in the aperture (Rabi 1934). Chapman placed Dirichlet and Neumann boundaries on circles of various radii between 4 and 100 cm. (The coil outside radius is 3 cm.) Not surprisingly, he found that the error in aperture field magnitude decreases as the boundary radius increases. (Surprisingly, to me, it varies exactly as the square of the boundary radius.)

Even with a boundary radius of 100 cm--30 times the coil outside radius--the error in field magnitude in the aperture is 0.1% or 10 "units"--while for a 10-cm radius the error is 6% (600 units). However, if one simply averages the results for the Neuman and Dirichlet conditions, then the error is extremely small -- 0.04% (4 units) for a 10-cm radius (Table I). (Surprisingly the average error <u>decreases</u> as the boundary radius decreases from 10 to 4 cm.)

The spatial variation of field is of more concern. Unfortunately there is not enough data in Chapman's report to permit extraction of the individual multipoles. Fortunately, however, the field calculated at zero and 1-cm radii are presented, the difference in which corresponds to the algebraic sum of the allowed multipoles for a reference radius of 1 cm. This field difference varies much faster than the square of the boundary radius, being 0.3 units for a 6-cm boundary radius and 3.5 units for a 4-cm radius. Again, using the average of the Neumann and Dirichlet conditions gives much better results: 0.017 units for the 6-cm radius, and 0.057 units for the 4-cm radius (Table II).

For both magnitude of the aperture field and its spatial variation, the error for a 10-cm radius boundary using the average is about the same as for a 100-cm radius for either boundary condition alone.

For a coil surrounded by iron so thick that the field in the iron is very low, not a lot of flux will leak out, so the external field representation can be rather crude. But for more highly saturated iron the external conditions are of concern, especially if the external field is not very pure-dipolish.

****

Ref. 1 Michael Chapman, "Finite Element Analysis of the Magnetic Field of an Overlapping Cylinder Dipole coil.", SSC-N-694.

TABLE 1
Difference between calculated and theoretical values of B_y at origin

r_b	B_y at x=0 (teslas)			Relative error in B_y at x=0		
	Dirichlet	Neumann	Average	Dirichlet	Neumann	Average
4	1.5434712	3.5227875	2.5331294	-0.3907463	0.3905482	-0.0000991
6	2.0924561	2.9725575	2.5325068	-0.1740458	0.1733562	-0.0003448
10	2.3739304	2.6907669	2.5323487	-0.0629396	0.0621251	-0.0004072
100	--	2.5307132	--	--	-0.0010528	--

r_b = boundary radius, cm
Relative error = $[(B_y)_{calc} - (B_y)_{theo}] / (B_y)_{theo}$
where $(B_y)_{theo}$ = 2.5333803 teslas

TABLE 2

Difference in B_y at x = 0 and x = 1 cm, y = 0

r_b (cm)	Dirichlet B_y at r=0 (teslas)	Dirichlet B_y at r=1 (teslas)	Dirichlet Difference	Neumann B_y at r=0 (teslas)	Neumann B_y at r=1 (teslas)	Neumann Difference
4	1.5434712	1.5426019	-0.0008693	3.5227875	3.5236859	0.0008984
6	2.0924561	2.0923844	-0.0000717	2.9725575	2.9726377	0.0000802
10	2.3739304	2.3739310	-0.0000006	2.6907669	2.6907732	0.0000063
100	--	--	--	2.5307132	2.5307166	0.0000034

r_b (cm)	$[(\text{Diff.})/(B_y)_{theo}] \times 10^4$ Dirichlet	Neumann	Average
4	-3.431	3.546	0.057
6	-0.283	0.317	0.017
10	-0.002	0.025	0.014
100	--	0.013	--

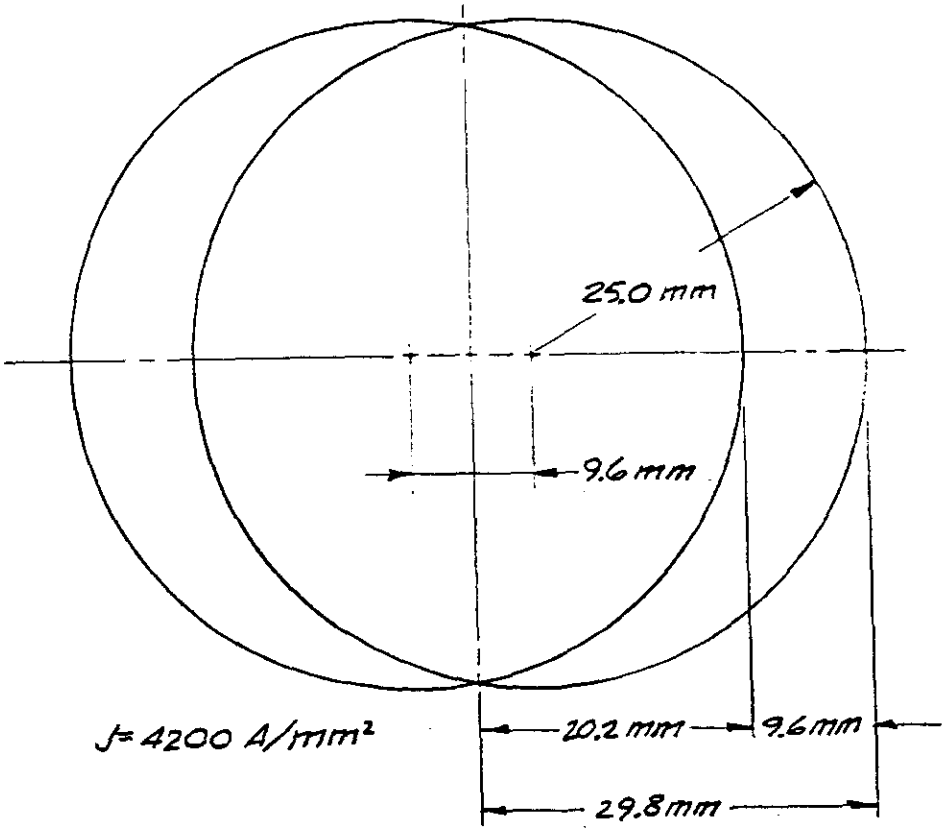

Figure 1. Dimensions of coil.