SSC-N-608
March 1989

FEASIBILITY OF PASSIVE QUENCH PROTECTION IN THE SSC

John C. Zeigler
Electrical Engineer
Texas Accelerator Center
2319 Timberloch Place
The Woodlands, Texas 77380

Ruben H. Carcagno
Research & Development Engineer
SSC Central Design Group
Lawrence Berkeley Laboratory
Berkeley, California 94720

SUMMARY

A passive quench protection system using cold bypass diodes is being considered for the main ring magnets of the Superconducting Super Collider, or SSC. Experimental and theoretical efforts have identified a commercially available diode which appears to be capable of surviving the cryogenic temperature and radiation environment of the accelerator. Preliminary reliability evaluations also indicate that the diode would not have a significant impact on the availability of the accelerator. A passive quench protection system therefore appears to be a viable option for the SSC, although further studies should be performed to provide a more comprehensive estimate of the overall reliability of the system.

INTRODUCTION

The proposed Superconducting Super Collider[1] is a proton-proton collider intended to permit investigation of elementary particles at distances of 10^{-19} m or less. Its primary feature is a pair of storage rings where oppositely directed proton beams are each accelerated to an energy of 20 TeV and caused to collide head-on at six experimental halls where the beams can be made to cross.

The proton beams are guided along the desired orbit through a 3.3 cm i.d. evacuated tube by a system of approximately 10,000 superconducting bending and focusing magnets. These magnets are operated at a temperature of 4.35 K and require a current of 6,500 A to achieve their design operating fields. The maximum bending field strength of 6.6 T governs the size of the rings and results in a circumference of 84 km (53 miles).

Each of the magnets must be protected against overheating during a quench, which is an undesirable transition from the superconducting state to the normal resistive state. When a quench occurs, the current is transferred from the NbTi superconductor to a copper stabiliser whose finite resistance produces joule heating. For SSC magnets, the time integral of the square of the current during a quench must be limited below $11 \cdot 10^6$ $A^2 \cdot s$ to avoid permanent damage.[2] This corresponds to an exponential current decay with a 0.52 sec time constant, and requires a fast operating switch to bypass current around the quenching magnet.

A passive quench protection system is being considered for the SSC which would use a power diode in parallel with each magnet to provide this fast bypass path during a quench. The diodes would be installed inside the magnet cryostats, subjecting them to the 4.35 K operating temperature of the magnets and to an energetic neutron radiation environment due to their proximity to the proton beam lines. The literature contains very little information relevant to this application of diodes which combines cryogenic temperatures, high currents, and neutron radiation. Therefore, a series of experimental and theoretical studies have been performed to evaluate the feasibility of a passive quench protection system for the SSC.

QUENCH PROTECTION SYSTEM FEATURES

The main rings of the SSC are each divided into ten independently powered circuits, or sectors. Each of these sectors is approximately 8 km long and contains a 300 V, 6500 A power supply connected in series with 432 dipoles and 72 quadrupoles. The total sector inductance is approximately 22 H, with 1.12 MJ of energy stored in each dipole and 12 kJ of energy stored in each quadrupole. As shown in the simplified schematic of Figure 1, each sector also includes four 0.28 Ω dump resistors which can be inserted in series with the power supply and magnets. If a quench is detected anywhere in the sector, these resistors are used to extract the energy stored in the remaining superconducting magnets. The resulting exponential current decay has a time constant of approximately 20 sec, much longer than the 0.52 sec required to adequately limit joule heating in the quenched magnet.

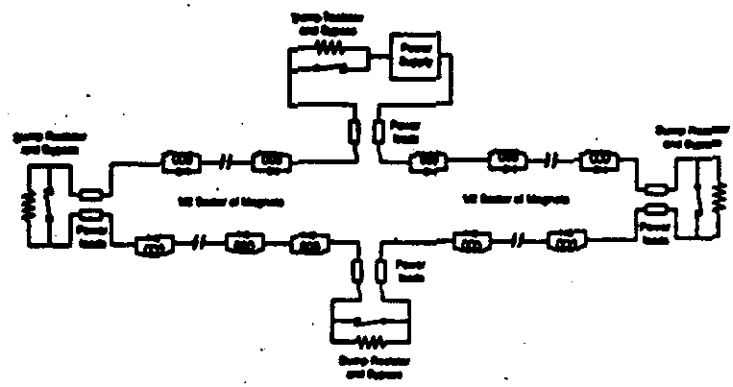

Figure 1. Simplified schematic of a passive quench protection system for one sector of the SSC.

The passive quench protection system proposed for the SSC uses a diode installed in parallel with each magnet to provide an automatic, fast operating bypass path around a quenched magnet. The diodes are installed inside the cryostat to eliminate the need for external connections and take advantage of the voltage controlled switch behavior of a diode operating in liquid helium. This characteristic, shown in Figure 2, requires approximately 15 V of forward bias before any significant current is conducted. After current begins to flow, however, the heat generated in the diode is sufficient to raise its temperature and restore a relatively normal I-V characteristic. During normal charging and discharging of the magnet, the voltage across the diode is sufficiently low that no current flows in the bypass path. During a quench, however, the resistive voltage developed inside the magnet quickly exceeds the "turn-on" voltage of the diode and

an initial evaluation of the long term reliability of cold bypass diodes in the SSC.

The Sandia model is a variation of the standard constant dormant failure rate model and distinguishes between permanent and intermittent failures. Permanent failures are the result of design and/or manufacturing mistakes that show up on a relatively random basis with time. The "cyclic" or intermittent failures result from workmanship errors, process slips, or other temporary problems in the manufacturing process. These intermittent failures occur at a rate too low to be detected by normal burn-in testing and are frequently correlated to a particular environmental condition such as temperature, vibration, or physical orientation. Using this model, the failure probability is given by

$$Q = Q_c + \lambda_p \Upsilon$$

where Q_c is the intermittent failure probability, λ_p is the permanent failure rate, and Υ is the storage period. From this formulation it can be seen that the intermittent failures are non-time related and therefore do not fit the standard constant failure rate models.

The diodes monitored in the Sandia program had an accumulated time in storage of $1.15 \cdot 10^6$ part-years, an average age of 5.98 years, and an average of 18.1 powered cycles per device. Although no failures were observed, statistical estimates of the failure rates were calculated as $Q_c = 1 \cdot 10^{-5}$ and $Q = 5 \cdot 10^{-6}$ using an upper 90% confidence bound and a 20 year storage time. For the 10,000 diodes in the SSC, these probabilities correspond to less than one diode failure over the lifetime of the machine.

The only reliability information available for diodes actually operating under SSC type conditions is a result of experiments performed at Deutsche Elektronen-Synchrotron (DESY) using standard DS6000 diodes in modified packages.[5] In these tests, 50 pairs of diodes were cooled to 4 K and subjected to 20 high current pulses very similar to those expected in the SSC. This provides a reasonable simulation of the SSC environment since the average magnet is expected to sustain fewer than 50 quenches during its lifetime. None of the diodes failed during these tests, but the sample size is statistically small in comparison to the number of diodes required for the SSC.

Both of these sources provide encouraging estimates of the reliability of cold diodes, but additional work should be performed to fully evaluate the reliability of a passive quench protection system. This evaluation should address the electrical and mechanical performance of a statistically large set of DS6000 diodes as a function of all quantifiable stresses, including quench pulses, radiation damage, thermal cycles, and dormant storage. Any observed failures should be carefully evaluated and classified as permanent or intermittent to make most effective use of the Sandia failure rate model. This extensive data base would then permit a comprehensive estimate of the reliability of a passive quench protection system and its impact on the availability of the SSC.

CONCLUSIONS

The theoretical and experimental results presented here suggest that a passive quench protection system using cold diodes is a feasible option for the SSC. The radiation hardness and reliability issues inherent to this type of system do not appear to pose a serious threat to the availability of the accelerator to perform its intended function.

Irradiation experiments have identified a commercially available power diode which appears sufficiently radiation resistant to survive the expected radiation dose over the lifetime of the accelerator. Theoretical simulations have shown that the DS6000 diode is more radiation resistant than the other commercially available diodes which have been tested primarily because of its thinner base width. The minimal impact of radiation damage on the performance characteristics of the DS6000 suggest that radiation damage effects can be evaluated independently of other types of failure mechanisms when estimating the failure rates due to each type of stress.

Preliminary evaluations of published reliability data do not suggest any type of systematic failure mechanisms which would limit the availability of the SSC. Since the estimated replacement time for a diode is 5–6 days, however, additional studies should be performed with larger statistical sample sizes of the DS6000 diode and should include all possible stress factors. The resulting failure rate information may then be used to evaluate the desirability of implementing a passive quench protection system for the SSC.

REFERENCES

[1] "Conceptual Design of the Superconducting Super Collider", SSC-SR-2020, March, 1986, SSC Central Design Group, c/o Lawrence Berkeley Laboratory.

[2] J. Strait, et al., "Full Length Prototype SSC Dipole Test Results", SSC-N-320, April, 1987, Fermi National Accelerator Laboratory.

[3] Don Groom, "Neutron flux at the diodes", SSC CDG Memo, September, 1987, SSC Central Design Group, c/o Lawrence Berkeley Laboratory.

[4] A. Ghosh, W. B. Sampson, G. Stenby, and A. J. Stevens, "Radiation Exposure of Bypass Diodes", SSC Technical Note No. 10, February, 1984, Brookhaven National Laboratory.

[5] K. H. Meß, "Quench Protection at HERA", Proceedings of the 1987 IEEE Particle Accelerator Conference, March, 1987, pp. 1474–1476.

[6] Herman J. Stein, "Electrical Studies of Neutron-Irradiated n-type Si: Defect Structure and Annealing", Physical Review, Vol. 163, No. 3, November, 1967, pp. 801–808.

[7] J. Zeigler, R. Carcagno, M. Weichold, "Experimental Measurements of Radiation Damage to Power Diodes at Cryogenic Temperature", Proceedings of the 1987 IEEE Particle Accelerator Conference, March, 1987, pp. 1537–1539.

[8] John C. Zeigler, Ruben H. Carcagno, Mark H. Weichold, and Glenn E. Welch, "Results of Neutron Irradiation of Power Diodes at 80 K", Technical Note TC1799, July, 1987, Texas Accelerator Center.

[9] G. T. Merren, "Dormant Storage Reliability Assessments–Data Based", IEEE Transactions on Components, Hybrids, and Manufacturing Technology, Vol. CHMT-4, No. 4, December, 1981, pp. 446–454.

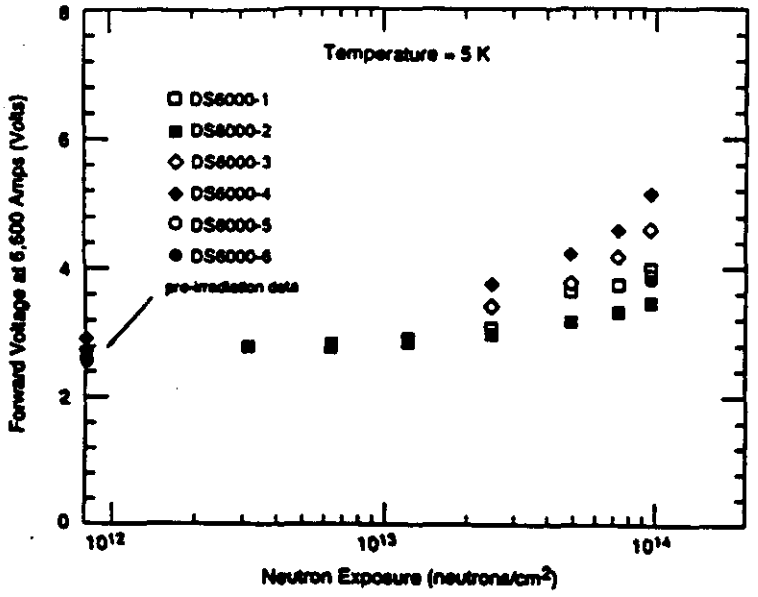

Figure 4. Forward voltage at 6600 A vs exposure for DS6000 diodes irradiated at 5 K.

Theoretical Simulations of Radiation Effects

Computer simulations of the classical radiation damage mechanisms were performed and correlated to the damage observed in the diodes irradiated at 80 K. These simulations were performed with SEDAN III, a one-dimensional program for the solution of differential equations governing the motion of carriers in a semiconductor material. All SEDAN simulations were performed with a specially defined "generic" power diode model which was a reasonably accurate representation of all five types of diodes tested.

The theoretical simulations evaluated the relative contribution at cryogenic temperatures for the three major room temperature radiation damage mechanisms: reductions in carrier lifetime, carrier concentration, and carrier mobility. The results showed that the reduction in carrier lifetime remains the dominant damage mechanism even at cryogenic temperatures, with effects from reduced carrier concentrations only becoming significant after lifetime degradation has already rendered the diode unusable for the intended application.

The results of simulations for diodes of varying base widths were then correlated to the experimental data as shown in Figure 5. The carrier lifetimes for the experimental data points were calculated from

$$\frac{1}{\tau} = \frac{1}{\tau_0} + \frac{\Phi}{K_\tau}$$

where τ = post-irradiation carrier lifetime
τ_0 = pre-irradiation carrier lifetime
Φ = neutron fluence
K_τ = carrier lifetime damage constant.

A single value of $K_\tau = 2.7 \cdot 10^6 n \cdot s/cm^2$ provided reasonable agreement between the experimental and theoretical data sets over a wide range of base widths and exposure levels.

A strong relationship between base width and radiation hardness is apparent in both the theoretical and experimental data. Proper diode performance in the high injection regime requires that the majority of the injected carriers traverse the full width of the base region before recombining. As radiation damage reduces the carrier lifetime, the number of carriers traversing the base is reduced and the voltage required to support the current is increased. Therefore, a diode with a narrow base width, and therefore shorter base transit times, will appear more radiation resistant than a thicker diode.

The extent to which a diode can be radiation hardened by reducing its base width is limited, however. A minimum thickness on the order of 25–50 microns is required to obtain acceptable production yields of 50–75 mm diode wafers. In addition, the reverse blocking voltage capability of the diode is proportional to base width and may impose a more severe constraint if blocking voltages greater than 100–200 V are required. Preliminary tests of full length SSC prototype magnets have indicated that this voltage rating is sufficient, however, and should not impose a limitation on the selection of a bypass diode.

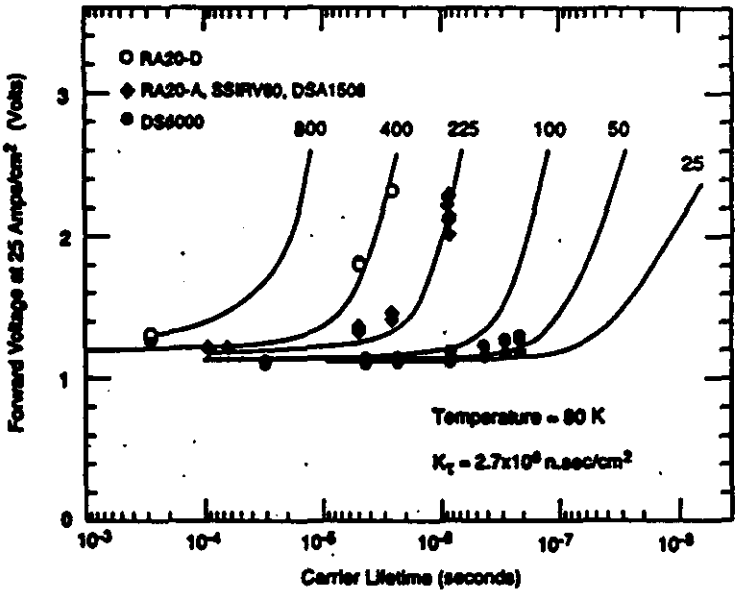

Figure 5. Forward voltage at 25 A/cm² vs carrier lifetime for power diodes irradiated at 80 K. Discrete symbols are measured values; curved lines are computer simulations for diodes with the base widths labeled in microns.

RELIABILITY OF COLD DIODES

The irradiation experiments indicate that the SSC should not expect systematic diode failures due to radiation damage during its 30 year lifetime. Since a passive quench protection system would employ almost 10,000 diodes, however, the probability of failure due to any failure mechanism must be carefully considered. This issue is of particular concern for the passive system because the replacement of a diode located inside the magnet cryostat could take 5–6 days.

The intermittent electrical and mechanical stresses on the bypass diodes resemble the conditions in dormant storage programs for critical military electronics systems. Sandia National Laboratory has proposed a two part failure model to describe data from their dormant storage program which has monitored some types of components for up to 20 years.[9] The failure rate data for diodes included in this program can thus be used in

commutates the current out of the magnet and into the bypass circuit. If the magnet is self-protecting, or able to absorb its own stored energy under all quench conditions, this passive circuit reduces the time constant of the current decay in an individual magnet to a safe level independent of the sector current.

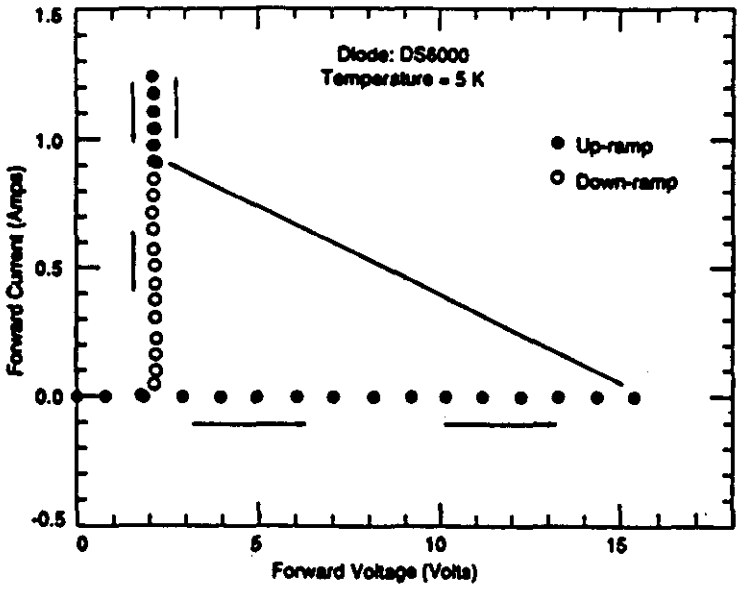

Figure 2. Switching behavior of DS6000 diode at 4.5 K, using a bias voltage step delay time of 1 second.

RADIATION HARDNESS OF COLD DIODES

The radiation hardness of cold bypass diodes is critical to the success of a passive quench protection system because they are expected to receive a 1 MeV equivalent neutron fluence of $3.2 \cdot 10^{11}$ n/cm^2·year at their mounting location inside the cryostat.[3] This flux is produced by nuclear cascades created through beam losses and interactions with residual gas molecules in the bore tube. The energetic neutrons generated by these cascades displace atoms in the lattice of the diode, increasing the forward voltage drop during conduction and therefore increasing the energy dissipation during a quench pulse. If the junction temperature exceeds a specified limit (typically 200–300 C), the diode may be permanently damaged and subsequently degrade or prohibit proper operation of the accelerator.

The majority of published radiation damage studies, including those performed specifically for quench protection system applications,[4,5] have been based on room temperature irradiations of semiconductor devices. In these studies, a significant level of thermal annealing, or repairing, of the radiation damage occurred simultaneously with the radiation induced defect formation. Since the annealing rate is a nonlinear function of temperature and is very small at cryogenic temperatures,[6] these results cannot be used to directly extrapolate the performance of SSC bypass diodes.

A series of experimental and theoretical studies have therefore been performed to evaluate the radiation hardness of commercially available power diodes under simulated SSC operating conditions. The results of these studies will be briefly discussed below; a more thorough treatment of portions of this information has previously been reported.[7,8]

Irradiation Tests at 80 K

A preliminary irradiation test was performed at 80 K to evaluate the relative radiation hardness of five types of commercially available power diodes. This operating temperature was chosen to minimise thermal annealing effects without requiring the additional complication and expense of a liquid helium coolant system. A variety of experimental procedures were used to monitor the forward and reverse performance characteristics of the diodes as a function of exposure.

The data in Figure 3 shows the change in forward voltage at a current of 500 A as a function of exposure for a representative of each diode type. One of the diode types, the DS6000, showed only a 5% increase in forward voltage after the full exposure of $1.2 \cdot 10^{13}$ n/cm^2. The four remaining diode types showed sufficient degradation by the end of the irradiation that they would have failed if subjected to an SSC quench pulse.

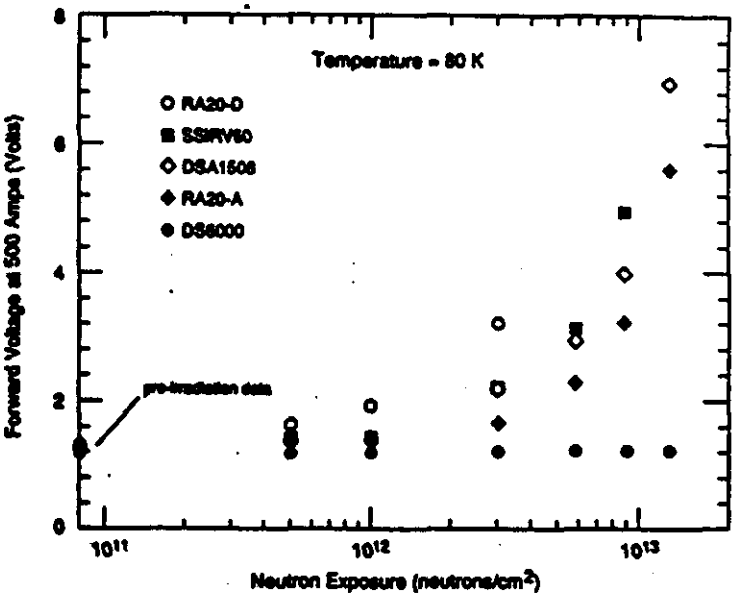

Figure 3. Forward voltage at 500 A vs exposure for power diodes irradiated at 80 K.

Irradiation Tests at 5 K

The comparative irradiation test at 80 K showed the DS6000 to be the most radiation resistant of the diode types tested and indicated that it might be a suitable candidate for use as an SSC quench bypass diode. This diode type was therefore selected for further irradiation testing at 5 K to more accurately simulate the actual SSC environment.

Figure 4 shows the change in forward voltage for six DS6000 diodes as a function of exposure at 5 K. A 300 μs sinusoidal current pulse was used for these measurements to minimize thermal annealing as a result of increasing junction temperature during conduction. This conservatively overestimates the diode response during a long pulse due to the large negative temperature coefficient of the voltage at cryogenic temperatures. These results, combined with calculations of the maximum power dissipation permitted by the temperature rating of the diode, indicate that all six diodes were capable of surviving an SSC quench pulse after a total exposure of approximately 10^{14} n/cm^2, equivalent to 300 years in the average SSC location.