STEADY STATE SIMULATION OF THE SSC MAGNET COOLING CIRCUIT

Joseph Rasson

June 1988

1. Introduction

Simulation capability of the SSC magnet cooling circuit is very useful in evaluating the cryogenic system's transient behavior such as magnet cool down and quench. Presently, the SSC has the capability to perform detailed steady-state simulation using the general purpose flowsheet process simulator ASPEN/SP. The ASPEN/SP program was enhanced by modifying its heat exchanger and flash models and by incorporating the NBS helium thermodynamic model. These enhancements facilitate simulation of the helium refrigeration system at required 4 K level. In addition to the ASPEN/SP, a transient simulation program specifically developed to meet the SSC magnet cooling circuit, is presently under development by an outside firm. This report contains the results of the ASPEN steady-state simulation of a quarter of a magnet arc sector coupled to a refrigerator and a liquefier plant. The results obtained by ASPEN will be used later to check the end-points results that will be obtained by the transient simulator.

2. Brief Description of the SSC Cryogenic System

Figure 1 shows a schematic layout of a magnet arc sector and its associated refrigeration plants. As shown in the diagram, the refrigeration plants feed single-phase helium into two parallel magnet rings. The helium is delivered into each ring both upstream and downstream from the refrigeration plants, so an arc sector consists of four sections, each 4 km long. In every quarter of a sector, the single-phase helium is divided into two main streams. One stream cools the magnet cells by boiling part of the helium in the recoolers, and the second stream cools the electric power leads. The helium cold gas is returned to the 4 K refrigerator, and the electric lead warm gas is returned to the liquefier.

Figure 2 show a more detailed description of a quarter of an arc sector. During steady-state cooling process, the cryogenic cooling circuit consists of the following major components:

i 18 sets of two magnet half-cells
ii 19 recoolers
iii 2 pumps
iv 19 vapor mixers
v 20 single phase helium flow splitters
vi 1 single phase mixer
vii flow control valves
viii several piping connections

In order to save computing time, the present study considered a representative set of magnet half cells and recoolers. Figure 3 shows details of the flowsheet simulated in this study. As shown in Fig. 3, the first recooler which removes the heat added by the pump and the sectors' last two sets of magnet half cells and recooler are considered. The intermediate half cells and recoolers are represented by dummy units to account for their pressure drop.

The 4 K refrigerator and the liquefier plants are modeled as a set of compressors without heat exchangers in order to save computing time associated with heat exchanger simulations. Instead, dummy units were added to account for the heat exchangers' effects on temperatures and pressures.

3. Simulation Techniques

The cryogenic system components were modeled using the enhanced ASPEN/SP unit modules. The input parameters are specified in a computer file called TEST.INP that is included in the appendix. As shown in the input file, the majority of the component specifications are straightforward. The only exceptions are the magnet-half-cells, the recooler, and the single-phase flow splitter which are described in more detail.

Magnet Half-Cells. Magnet half cells are modeled using the ASPEN/SP HEATER unit modular with the pressure and heat duty specified. The pressure is set by taking the system pressure drop into account. In steady state condition, flow rate of single-phase helium in the magnet string is known *a priori*. Therefore, pressure drops in the magnet half-cells can be directly calculated, and for this specific run it was set equal to 0.0054 ata.

Similarly, heat duty was also specified for every magnet half-cell, and it was set equal to 25.18 watts.

Recoolers. The recoolers are simulated using a set of two ASPEN/SP Heater modular. One heater is for the single-phase helium stream (the tube side of the recooler) and the other heater is for the boiling stream (the shell side of the recooler). The two heaters are coupled together by design specifications which set their heat duties to be equal to each other. The shell side HEATER unit is set by

specifying both the unit pressure drop and the exiting stream phase split (which was set to 100% vapor). Therefore, the exit temperature of the shell side is calculated based on the prevailing pressure condition. The tube side HEATER unit was set by specifying its exiting temperature to be 0.002 higher than the shell side temperature and its pressure drop to be 0.003 ata.

Single Phase Flow Splitters. Flow splitters are simulated using the FSPLIT unit modular. The split fraction of the flow directed to the shell side of the recooler is specified by a design specification block to insure that the level of the single-phase helium remains steady i.e., the heat duties of both sides of the recooler heat exchanger are balanced.

4. Simulation Results

Using the input file prepared for the magnet system cryogenic flowsheet, the computer program ASPEN/SP calculates flow rates, heat duties and thermodynamic intensive properties that satisfy all design constraints.

The complete simulation result is included in the appendix in a computer report file named MAGN.REP. The report file includes detailed descriptions of each unit model used in the flowsheet including input and output conditions. The summary of the stream report in presented in Table 1, and the summary of the unit models is presented in Table 2. Conversion difficulties were initially encountered during the simulation due to the failure ASPEN/SP X Flash model. These problems were later eliminated by specifying better temperature estimates in the unit models.

Table 1

Summary of Stream Report

Stream No.	Flow Rate (Kg/Sec)	Temperature (°K)	Pressure (ata)	Vapor Fraction %
4	.100	4.136	3.940	0.00
5	.100	4.208	3.935	0.00
6	.100	4.278	3.923	0.00
7	.100	4.162	3.926	0.00
8	.100	4.233	3.921	0.00
9	.100	4.302	3.916	0.00
10	.100	4.168	3.913	0.00
11	.100	4.134	3.950	0.00
12	.025	4.250	1.200	0.00
13	.025	4.579	3.300	0.00
14	.133	4.371	3.300	0.00
15	.125	4.371	3.300	0.00
16	.125	4.457	3.593	0.00
17	.125	4.134	3.950	0.00
18	.025	4.134	3.950	0.00
19	.008	4.371	3.300	0.00
20	.095	4.320	3.300	0.00
21	.005	4.200	.900	100
22	.008	4.114	.900	100
23	.012	4.145	.900	100
24	.012	300.0	.800	100
25	.012	300.0	18.00	100
26	.012	4.500	3.300	0.00
27	.025	300.0	1.050	100
28	.025	300.0	13.30	100
74	.100	4.149	3.903	0.00
75	.098	4.172	3.902	0.00
76	.095	4.175	3.900	0.00
77	.002	4.175	3.900	0.00
78	.002	4.142	.925	100
79	.002	4.172	3.902	0.00
80	.002	4.148	.930	100
81	.005	4.188	.923	100

KKKKKKKKKK 6666666666666666666666666666666666666666666666666666666666666666666666666666666666666666666666666666666666666666666666666666 KKKKKKKKKK
KKKKKKKKKK 6666666666666666666666666 Digital Equipment Corporation - VAX/VMS Version V4.7 6666666666666666666666666 KKKKKKKKKK
KKKKKKKKKK 6666666666666666666666666666666666666666666666666666666666666666666666666666666666666666666666666666666666666666666666666666 KKKKKKKKKK

```
                    RRRR    AAA    SSSS   SSSS   000   N   N
                    R   R  A   A  S      S      0   0  N   N
                    R   R  A   A  S      S      0   0  NN  N
                    RRRR   A   A   SSS    SSS   0   0  N N N
                    R R    AAAAA      S      S  0   0  N  NN
                    R  R   A   A      S      S  0   0  N   N
                    R   R  A   A  SSSS   SSSS    000   N   N
```

Table 2

```
                  TTTTTTTTTT  EEEEEEEEEE    SSSSSSSS  TTTTTTTTTT
                  TTTTTTTTTT  EEEEEEEEEE    SSSSSSSS  TTTTTTTTTT
                      TT      EE          SS              TT
                      TT      EE          SS              TT
                      TT      EE          SS              TT
                      TT      EE          SS              TT
                      TT      EEEEEEEE      SSSSSS        TT
                      TT      EEEEEEEE      SSSSSS        TT
                      TT      EE                  SS      TT
                      TT      EE                  SS      TT
                      TT      EE                  SS      TT
                      TT      EE                  SS      TT
                      TT      EEEEEEEEEE  SSSSSSSS        TT
                      TT      EEEEEEEEEE  SSSSSSSS        TT

          IIIIII    NN      NN  PPPPPPPP        ;;;;        11          11        333333
          IIIIII    NN      NN  PPPPPPPP        ;;;;        11          11        333333
            II      NN      NN  PP      PP      ;;;;      1111        1111      33      33
            II      NN      NN  PP      PP      ;;;;      1111        1111      33      33
            II      NNNN    NN  PP      PP                  11          11              33
            II      NNNN    NN  PP      PP                  11          11              33
            II      NN  NN  NN  PPPPPPPP        ;;;;        11          11            33
            II      NN  NN  NN  PPPPPPPP        ;;;;        11          11            33
            II      NN    NNNN  PP              ;;;;        11          11              33
            II      NN    NNNN  PP              ;;;;        11          11              33
....        II      NN      NN  PP                ;;        11          11      33      33
....        II      NN      NN  PP                ;;        11          11      33      33
....      IIIIII    NN      NN  PP              ;;        111111      111111      333333
....      IIIIII    NN      NN  PP              ;;        111111      111111      333333
```

File 1DUS129:[RASSON.REFR]TEST.INP;113 (2648,162,0), last revised on 25-MAY-1988 09:40, is a 18 block sequential file owned by UIC [RASSON]. The records are variable length with implied (CR) carriage control. The longest record is 79 bytes.

Job TEST (46) queued to SYS$PRINT on 25-MAY-1988 10:03 by user RASSON, UIC [RASSON], under account 839030 at priority 100, started on printer LCA0 on 25-MAY-1988 10:03 from queue CSA3$LCA0.

```
NEW
;:MAIL (ON BATCH JOB;DO YOU WANT MAIL(Y), NOTIFY(N) Y/N) = N
;:OLDID= MAGN
;:NEWID= MAGN
;:DEDETE FILES (EXCEPT .LOG .HIS .REP .INP  G BUILDS PLD; Y/N/G) = N
;:VERSION (REFERS TO TEST(Y) OR PROPDUCTION(N))= N
;:BUILD A NEW INPUT TRANSLATOR (Y/N)= N
;:PDF LENGTH (400 MAX) = 260
;:QUEUE (B:BATCH 2, S:SYS$BATCH, H:HIGH SPED)=S
;:SUBMIT (Y IF IMMEDIATE, N IF SPECIFYING TIME)= Y
;:KEY = USRPP1A                                ARG = CRYOGEN
;:END VAX/VMS PROCS
;
TITLE 'STEADY STATE ANALYSIS OF MAGNET STRING'
;
DESCRIPTION &
 ' SSC 4K MAGNET STRING DP IS GIVEN'
;
HISTORY  MSG-LEVEL  PROPERTIES=2  STREAMS=6
;
RUN-CONTROL MAX-ERRORS=200
;
IN-UNITS  SI  PRES=ATM
OUT-UNITS SI  PRES=ATM
;
COMPONENTS  NITROGEN  NITROGEN / HELIUM  HE-4
;
PROPERTIES  SYSOP17
;
FILES  USRPP1A  CRYOGEN
;
PROP-SOURCES
    GLOBAL  CRYOGEN  COMPS=ALL
;
FORMULA  HELIUM  HE
;*********************************************************************
;
DEF-STREAMS CONVEN  ALL / HEAT Q1B Q2B Q1A Q2A QA QB / WORK WP1  WP2
;
;*********************************************************************
;
; STREAM PARAGRPH
;
STREAM   12  PRES=1.2      TEMP=4.25    MASS-FLOW=.025
          MOLE-FRAC   HELIUM  1.0
;
STREAM 16 PRES=3.9    TEMP=4.2    MASS-FLOW=.1250
         MOLE-FRAC  HELIUM 1.0
;
STREAM 26 PRES=3.3    TEMP=4.32    MASS-FLOW=.025
         MOLE-FRAC  HELIUM 1.0
;
STREAM 20 PRES=3.3    TEMP=4.32    MASS-FLOW=.0751
         MOLE-FRAC  HELIUM 1.0
;
;
;
FLOWSHEET HALFCELL
    BLOCK  CELL1A   IN = 4                OUT = 5
;
```

```
    BLOCK  CELL1B   IN = 5                OUT = 6
;
    BLOCK  CELL2A   IN = 7                OUT = 8
;
    BLOCK  CELL2B   IN = 8                OUT = 9
;
FLOWSHEET RECOOLER
;
    BLOCK  RECLER1A    IN = 6                 OUT = 7  Q1A
;
    BLOCK  RECLER1B    IN = 77                OUT = 78  Q1B
;
    BLOCK  RECLER2A    IN = 9                 OUT = 10  Q2A
;
    BLOCK  RECLER2B    IN = 79              OUT = 80  Q2B
;
FLOWSHEET LIQRETURN
   BLOCK  VALVE1          IN = 10                  OUT = 74
;
   BLOCK LIQHEAT2         IN = 74                  OUT = 74A
;
   BLOCK   LIQRET2        IN = 74A                 OUT = 75  79
;
   BLOCK LIQHEAT1         IN = 75                  OUT = 75A
;
   BLOCK   LIQRET1        IN = 75A                 OUT = 76  77
;
FLOWSHEET VAPRETURN
;
   BLOCK VAPRET2         IN = 80                    OUT = 81
;
;   BLOCK VAPMIX1         IN = 81  78                OUT = 82A
;
   BLOCK VAPRET1         IN = 81 78                  OUT = 82  DUM1
;
;
;*************************************************************
;
FLOWSHEET PUMPS
;
    BLOCK    PUMP1    IN = 12   WP1      OUT = 13
;
    BLOCK    LIQMIX   IN = 13 20 26       OUT = 14
;
    BLOCK    SPLIT3   IN = 14             OUT = 15  19
;
    BLOCK    PUMP2    IN = 15   WP2       OUT = 16
;
    BLOCK    RECLERA  IN = 16             OUT = 17  QA
;
    BLOCK    RECLERB   IN = 19             OUT = 22  QB
;
    BLOCK SPLIT4      IN = 17             OUT = 11  18
;
    BLOCK  VALVE2     IN = 11             OUT = 4
;
     BLOCK  VAP        IN = 82             OUT = 21
;
     BLOCK  VAPMIX     IN = 22  21         OUT = 23
;
```

```
FLOWSHEET REFER
   BLOCK VAPHEAT  IN=23     OUT=24
;
   BLOCK COMP1   IN=24  OUT=25  WCOMP1
;
   BLOCK VAPCOOL  IN=25 OUT=26A
;
   BLOCK LIQHEAT  IN=18  OUT = 27
;
  BLOCK  COMP2  IN=27 OUT = 28 WCOMP2
```

```
;
  BLOCK  LIQCOOL  IN=28 OUT=29
;
BLOCK VAPHEAT   HEATER
      PARAM   PRES=-.1  TEMP=300
      BLOCK-OPTIONS  SMLV=4
;
BLOCK COMP1  COMPR
      PARAM  TYPE=3  PRES=18  ES=.72  GFLAG=1
;
BLOCK  VAPCOOL HEATER
      PARAM   PRES=3.3  TEMP=4.5
      BLOCK-OPTIONS  SMLV=4
;
BLOCK   LIQHEAT   HEATER
    PARAM  PRES=1.05   TEMP=300
      BLOCK-OPTIONS  SMLV=4
;
BLOCK  COMP2     COMPR
      PARAM  TYPE=3  PRES=13.3  ES=.72 GFLAG=1
;
BLOCK   LIQCOOL   HEATER
      PARAM    PRES=1.2    TEMP=4.25
      BLOCK-OPTIONS   SMLV=4
;;
STREAM-REPORT  1
  STREAMS ALL
  FLOW-FRAC MIXED BASES=MASS-FRAC
  INTENSIVE-PROPS MIXED  PROPS=ALL BASES=MASS
```

```
    BLOCK  LIQ        IN = 76             OUT = 20
;*************************************************************
;
BLOCK    PUMP1   PUMP
         PARAM    PRES=3.3    TYPE=1  EFF=.85
      BLOCK-OPTIONS  SMLV=4  HMB-RESULTS=2
;
BLOCK    LIQMIX   MIXER
         PARAM   NPK=1 KPH=2
      BLOCK-OPTIONS  SMLV=4  HMB-RESULTS=2
;
BLOCK    SPLIT3   FSPLIT
         MASS-FLOW  15 .125
;
BLOCK    PUMP2      PUMP
         PARAM  PRES=3.953    TYPE=1  EFF=.85
      BLOCK-OPTIONS  SMLV=4  HMB-RESULTS=2
;
BLOCK    RECLERA   HEATER
         PARAM   PRES=-.003  TEMP=4.134
;
BLOCK    RECLERB   HEATER
      PARAM   V-FRAC=1.0    PRES=.9     TEST=4.1
      BLOCK-OPTIONS  SMLV=4  HMB-RESULTS=2
;
BLOCK    SPLIT4     FSPLIT
         MASS-FLOW    11   .10
;
BLOCK    VALVE2     HEATER
         PARAM     PRES=-.00987    DUTY=0 KPH=2 NPK=1
      BLOCK-OPTIONS  SMLV=4  HMB-RESULTS=2
;
;BLOCK  VAP HEATER
;        PARAM   PRES=.9    TEMP=4.2  NPK=1 KPH=1
;
;BLOCK  VAPMIX  MIXER
;
BLOCK     LIQ     HEATER
   PARAM   PRES=3.3    TEMP=4.32 NPK=1  KPH=2  TEST=4.2
;
;*********************************************************************
;
BLOCK   VAPRET1    FLASH2
       PARAM     PRES = -.002  DUTY=1 TEST=4.1
;
BLOCK   VAPRET2    HEATER
        PARAM     PRES = -.002 NPK=1 KPH=1  DUTY=1  TEST=4.1
;
;BLOCK   VAPMIX1    MIXER
;        PARAM     NPK=1  KPH=1
;*******************************************************************
;
BLOCK   VALVE1      HEATER
        PARAM    PRES=-.00987    DUTY=.0 NPK=1 KPH=2
      BLOCK-OPTIONS  SMLV=4  HMB-RESULTS=2
;
BLOCK   LIQHEAT1    HEATER
        PARAM   PRES = -.001  DUTY = 1.0   NPK=1 KPH=2 TEST=4.2
      BLOCK-OPTIONS  SMLV=4  HMB-RESULTS=2
;
```

```
BLOCK   LIQHEAT2    HEATER
        PARAM   PRES = -.001  DUTY = 1.0   NPK=1  KPH=2 TEST=4.2
      BLOCK-OPTIONS  SMLV=4  HMB-RESULTS=2
;
;*************************************************************************
;
BLOCK   LIQRET1    FSPLIT
        FRAC  77  .02
      BLOCK-OPTIONS  SMLV=4  HMB-RESULTS=2
;
BLOCK   LIQRET2    FSPLIT
        FRAC  79    .02
      BLOCK-OPTIONS  SMLV=4  HMB-RESULTS=2
;
;*********************************************************************
;
BLOCK  CELL1A   HEATER
       PARAM   PRES = -.0054   DUTY = 25.18   NPK=1 KPH=2
      BLOCK-OPTIONS  SMLV=4  HMB-RESULTS=2
;
BLOCK  CELL2A   HEATER
       PARAM   PRES = -.0054   DUTY = 25.18   NPK=1 KPH=2
      BLOCK-OPTIONS  SMLV=4  HMB-RESULTS=2
;
BLOCK  CELL1B   HEATER
       PARAM   PRES = -.0054   DUTY = 25.18   NPK=1 KPH=2
      BLOCK-OPTIONS  SMLV=4  HMB-RESULTS=2
;
BLOCK  CELL2B   HEATER
       PARAM   PRES = -.0054   DUTY = 25.18   NPK=1 KPH=2
      BLOCK-OPTIONS  SMLV=4  HMB-RESULTS=2
;
;********************************************************************
;
BLOCK RECLER1A   HEATER
      PARAM  PRES = -.003   TEMP = 4.162
;
;
BLOCK RECLER2A   HEATER
      PARAM  PRES = -.003   TEMP = 4.168
;
;*********************************************************************
;
BLOCK RECLER2B   HEATER
      PARAM   V-FRAC=1.   PRES=.93  TEST=4.1
      BLOCK-OPTIONS  SMLV=4  HMB-RESULTS=2
;
BLOCK RECLER1B   HEATER
      PARAM   V-FRAC=1.    PRES =.925 TEST=4.1
      BLOCK-OPTIONS  SMLV=4  HMB-RESULTS=2
;
;*********************************************************************
;TEAR-STREAMS    79 -1D-2   / 77 -1D-2
;*********************************************************************
DES-SPEC SPLT1
    DEFINE DUTY1A STRM-ATTR-VAR STREAM=Q1A   ATTR=HEAT VAR=Q
    DEFINE DUTY1B STRM-ATTR-VAR STREAM=Q1B  ATTR=HEAT VAR=Q
    SPEC DUTY1B TO '-1.*DUTY1A'
    TOL-SPEC  .1
    VARY  BLOCK-VAR BLOCK=LIQRET1 SENTENCE=FRAC  ID1=77 VARIABLE=FRAC
```

```
    LIMITS  .001 .3
;
DES-SPEC SPLT2
    DEFINE DUTY2A STRM-ATTR-VAR STREAM=Q2A  ATTR=HEAT VAR=Q
    DEFINE DUTY2B STRM-ATTR-VAR STREAM=Q2B  ATTR=HEAT VAR=Q
    SPEC DUTY2B TO '-1.*DUTY2A'
    TOL-SPEC  .1
    VARY  BLOCK-VAR BLOCK=LIQRET2 SENTENCE=FRAC  ID1=79 VARIABLE=FRAC
    LIMITS  .001 .3
;
DES-SPEC SPLT3
    DEFINE DUTYA STRM-ATTR-VAR STREAM=QA  ATTR=HEAT VAR=Q
    DEFINE DUTYB STRM-ATTR-VAR STREAM=QB  ATTR=HEAT VAR=Q
    SPEC DUTYB TO '-1.*DUTYA'
    TOL-SPEC  .1
    VARY  STREAM-VAR STREAM=26 VAR= MOLE-FLOW
    LIMITS  .0005  .03
;
;
;
CONVERGENCE  FLOW2 ONE-VAR
             SPEC  SPLT2
;
CONVERGENCE  FLOW1 ONE-VAR
             SPEC  SPLT1
;
CONVERGENCE  FLOW3 ONE-VAR
             SPEC  SPLT3
;
CONVERGENCE  STRM   WEGSTEIN
   TEAR  16 -1D-2 / 12 -1D-2 / 26 -1D-2 / 20 -1D-2
;
;
SEQUENCE  MAIN1  STRM  RECLERA   &
      SPLIT4  VALVE2 &
  CELL1A CELL1B RECLER1A CELL2A  CELL2B RECLER2A VALVE1 LIQHEAT2 &
 FLOW2  LIQRET2  RECLER2B (RETURN FLOW2) &
  LIQHEAT1  FLOW1  LIQRET1 RECLER1B &
  (RETURN FLOW1)  PUMP1 FLOW3 LIQMIX SPLIT3  PUMP2 RECLERB &
 (RETURN FLOW3) (RETURN STRM)
;
;SEQUENCE  MAIN1   STRM PUMP2 RECLERA RECLERB &
;       SPLIT4  VALVE2 &
;  CELL1A CELL1B RECLER1A CELL2A  CELL2B RECLER2A VALVE1 LIQHEAT2 &
; FLOW2  LIQRET2  RECLER2B (RETURN FLOW2) &
;  LIQHEAT1  FLOW1  LIQRET1 RECLER1B &
;  (RETURN FLOW1)
;
SEQUENCE  MAIN2    PUMP1  FLOW3 LIQMIX SPLIT3 RECLERB (RETURN FLOW3)
;
STREAM-REPORT  1
  STREAMS ALL
  FLOW-FRAC MIXED BASES=MASS-FRAC   MOLE-FRAC
  PHASE-SPLITS  MASS
  INTENSIVE-PROPS MIXED PROPS=ALL BASES=MASS
```

```
BBBBBBBBBB    4444444444444444444444444444444444444444444444444444444444444444444444444444444444444444444444444444444444    BBBBBBBBBB
BBBBBBBBBB    4444444444444444444444  Digital Equipment Corporation - VAX/VMS Version V4.7  4444444444444444444444    BBBBBBBBBB
BBBBBBBBBB    4444444444444444444444444444444444444444444444444444444444444444444444444444444444444444444444444444444444    BBBBBBBBBB

                    RRRR    AAA    SSSS   SSSS   000   N   N
                    R   R  A   A  S      S      0   0  N   N
                    R   R  A   A  S      S      0   0  NN  N
                    RRRR   A   A   SSS    SSS   0   0  N N N
                    R R    AAAAA      S      S  0   0  N  NN
                    R  R   A   A      S      S  0   0  N   N
                    R   R  A   A  SSSS   SSSS    000   N   N

                MM      MM    AAAAAA      GGGGGGGG  NN      NN
                MM      MM    AAAAAA      GGGGGGGG  NN      NN
                MMMM  MMMM  AA      AA  GG          NN      NN
                MMMM  MMMM  AA      AA  GG          NN      NN
                MM  MM  MM  AA      AA  GG          NNNN    NN
                MM  MM  MM  AA      AA  GG          NNNN    NN
                MM      MM  AA      AA  GG          NN  NN  NN
                MM      MM  AA      AA  GG          NN  NN  NN
                MM      MM  AAAAAAAAAA  GG  GGGGGG  NN    NNNN
                MM      MM  AAAAAAAAAA  GG  GGGGGG  NN    NNNN
                MM      MM  AA      AA  GG      GG  NN      NN
                MM      MM  AA      AA  GG      GG  NN      NN
                MM      MM  AA      AA    GGGGGG    NN      NN
                MM      MM  AA      AA    GGGGGG    NN      NN

                RRRRRRRR    EEEEEEEEEE  PPPPPPPP        ;;;;        11
                RRRRRRRR    EEEEEEEEEE  PPPPPPPP        ;;;;        11
                RR      RR  EE          PP      PP      ;;;;      1111
                RR      RR  EE          PP      PP      ;;;;      1111
                RR      RR  EE          PP      PP                  11
                RR      RR  EE          PP      PP                  11
                RRRRRRRR    EEEEEEEE    PPPPPPPP        ;;;;        11
                RRRRRRRR    EEEEEEEE    PPPPPPPP        ;;;;        11
                RR  RR      EE          PP              ;;;;        11
                RR  RR      EE          PP              ;;;;        11
.... .          RR    RR    EE          PP                ;;        11
....            RR    RR    EE          PP                ;;        11
....            RR      RR  EEEEEEEEEE  PP              ;;        111111
....            RR      RR  EEEEEEEEEE  PP              ;;        111111


File  $1$DUS129:[RASSON.REFR]MAGN.REP;1 (8405,31,0), last revised on 25-MAY-1988 11:20, is a 183 block sequential file owned by UIC
[RASSON].  The records are variable length with FORTRAN (FTN) carriage control.  The longest record is 86 bytes.

Job MAGN (300) queued to SYS$PRINT on 25-MAY-1988 12:59 by user RASSON, UIC [RASSON], under account 839030 at priority 100, started
on printer LCA0 on 25-MAY-1988 12:59 from queue CSA4$LCA0.

BBBBBBBBBB    4444444444444444444444444444444444444444444444444444444444444444444444444444444444444444444444444444444444    BBBBBBBBBB
BBBBBBBBBB    4444444444444444444444  Digital Equipment Corporation - VAX/VMS Version V4.7  4444444444444444444444    BBBBBBBBBB
BBBBBBBBBB    4444444444444444444444444444444444444444444444444444444444444444444444444444444444444444444444444444444444    BBBBBBBBBB
```

STEADY STATE ANALYSIS OF MAGNET STRING

DESCRIPTION

SSC 4K MAGNET STRING DP IS GIVEN

RUN CONTROL INFORMATION

TYPE OF RUN: NEW

INPUT FILE NAME: TEST

INPUT PROBLEM DATA FILE NAME: MAGN UPDATE NO. 0

MAIN CALLING PROGRAM NAME: MAGN

CPU TIME USED DURING SIMULATION STEP: 279.94 SECONDS
SIMULATION REQUESTED FOR ENTIRE FLOWSHEET

PUMP SUMMARY

BLOCK ID	PUMP1	PUMP2
MODEL TYPE	PUMP	PUMP
UNIT TYPE	CENTRIFUGAL	CENTRIFUGAL
INLET PRESSURE (ATM)	1.2000	3.3000
OUTLET PRESSURE(ATM)	3.3000	3.9530
PRESSURE RISE (ATM)	2.1000	0.6530
HEAD (J/KG)	1638.7255	491.5053
VOLUME FLOW (CUM/SEC)	.19890-03	.93567-03
DENSITY (KMOL/CUM)	129.0463	134.6175
OUTLET TEMPERATURE (K)	4.5793	4.4573
BRAKE POWER (WATT)	49.7903	72.8342
POLYTROPIC EFFICIENCY	0.8500	0.8500
MECHANICAL EFFICIENCY	1.0000	1.0000

FLASH UNIT SUMMARY

BLOCK ID	VAPRET1
MODEL TYPE	FLASH2
OUTLET TEMPERATURE (K)	.15159+07
OUTLET PRESSURE(ATM)	-0.0098
VAPOR FRACTION	-.23698+05
HEAT DUTY (WATT)	8702.2348
FLOW LIQUID1/TOTAL LIQUID	-.26731+05
VAPOR FLOW (KMOL/SEC)	0.0011
LIQUID1 FLOW (KMOL/SEC)	0.0
LIQUID2 FLOW (KMOL/SEC)	
VAPOR VOL-FLOW(CUM/SEC)	.30190-03
LIQ VOL-FLOW (CUM/SEC)	0.0
DENSITY RATIO	MISSING

HEAT EXCHANGER SUMMARY

BLOCK ID	CELL1A	CELL1B	CELL2A	CELL2B
MODEL TYPE	HEATER	HEATER	HEATER	HEATER
HEAT DUTY (WATT)	0.0	0.0	0.0	0.0
EXCHANGER AREA (SQM)				
SIDE 1				
INLET TEMPERATURE (K)	4.1359	4.2081	4.1620	4.2333
OUTLET TEMPERATURE (K)	4.2081	4.2778	4.2333	4.3021
INLET PRESSURE (ATM)	3.9401	3.9347	3.9263	3.9209
OUTLET PRESSURE(ATM)	3.9347	3.9293	3.9209	3.9155
PRESSURE RISE (ATM)	-0.0054	-0.0054	-0.0054	-0.0054
INLET VAPOR FRACTION	0.0	0.0	0.0	0.0

HEAT EXCHANGER SUMMARY (CONTINUED)

BLOCK ID	RECLER1A	RECLER1B	RECLER2A	RECLER2B
MODEL TYPE	HEATER	HEATER	HEATER	HEATER
HEAT DUTY (WATT)	-41.5320	41.4389	-48.4844	48.4270
EXCHANGER AREA (SQM)				
SIDE 1				
INLET TEMPERATURE (K)	4.2778	4.1745	4.3021	4.1715
OUTLET TEMPERATURE (K)	4.1620	4.1424	4.1680	4.1480
INLET PRESSURE (ATM)	3.9293	3.9006	3.9155	3.9016
OUTLET PRESSURE(ATM)	3.9263	0.9250	3.9125	0.9300
PRESSURE RISE (ATM)	-0.0030	-2.9756	-0.0030	-2.9716
INLET VAPOR FRACTION	0.0	0.0	0.0	0.0
OUTLET VAPOR FRACTION	0.0	1.0000	0.0	1.0000

BLOCK ID	VALVE1	LIQHEAT2	LIQHEAT1	VAPRET2
MODEL TYPE	HEATER	HEATER	HEATER	HEATER
HEAT DUTY (WATT)	0.0	0.0	0.0	0.0
EXCHANGER AREA (SQM)				
SIDE 1				
INLET TEMPERATURE (K)	4.1680	4.1685	4.1715	4.1480
OUTLET TEMPERATURE (K)	4.1685	4.1715	4.1745	4.1902
INLET PRESSURE (ATM)	3.9125	3.9026	3.9016	0.9300
OUTLET PRESSURE(ATM)	3.9026	3.9016	3.9006	0.9280
PRESSURE RISE (ATM)	-0.0098	-.10000-02	-.10000-02	-0.0020
INLET VAPOR FRACTION	0.0	0.0	0.0	1.0000
OUTLET VAPOR FRACTION	0.5000	0.5000	0.5000	1.0000

BLOCK ID	RECLERA	RECLERB	VALVE2	VAP
MODEL TYPE	HEATER	HEATER	HEATER	HEATER
HEAT DUTY (WATT)	-150.2698	150.2693	0.0	1.4728
EXCHANGER AREA (SQM)				
SIDE 1				
INLET TEMPERATURE (K)	4.4573	4.3714	4.1339	4.1882
OUTLET TEMPERATURE (K)	4.1340	4.1140	4.1359	4.2000
INLET PRESSURE (ATM)	3.9530	3.3000	3.9500	0.9230
OUTLET PRESSURE(ATM)	3.9500	0.9000	3.9401	0.9000
PRESSURE RISE (ATM)	-0.0030	-2.4000	-0.0098	-0.0230
INLET VAPOR FRACTION	0.0	0.0	0.0	1.0000
OUTLET VAPOR FRACTION	0.0	1.0000	0.5000	1.0000

BLOCK ID	LIQ
MODEL TYPE	HEATER
HEAT DUTY (WATT)	28.2668

EXCHANGER AREA (SQM)

SIDE 1

INLET TEMPERATURE (K)	4.1745
OUTLET TEMPERATURE (K)	4.3200
INLET PRESSURE (ATM)	3.9000
OUTLET PRESSURE(ATM)	3.3000
PRESSURE RISE (ATM)	-0.6000
INLET VAPOR FRACTION	0.0
OUTLET VAPOR FRACTION	MISSING

STEADY STATE ANALYSIS OF MAGNET STRING
U-O-S BLOCK SECTION

COMPRESSOR AND TURBINE SUMMARY

BLOCK ID	COMP1	COMP2
MODEL TYPE	COMPR	COMPR
UNIT TYPE	ISENTR COMP	ISENTR COMP
INLET PRESSURE (ATM)	0.0000	1.0500
OUTLET PRESSURE(ATM)	18.0000	13.3000
PRESSURE RISE (ATM)	17.2000	12.2500
VOLUME FLOW (CUM/SEC)	0.0046	0.0099
DENSITY (KMOL/CUM)	0.6587	0.6266
OUTLET TEMPERATURE (K)	1331.0752	1033.8456
BRAKE POWER (WATT)	.65916+05	.95357+05
POLYTROPIC EFFICIENCY	0.0	0.0
MECHANICAL EFFICIENCY	1.0000	1.0000

HEAT EXCHANGER SUMMARY

BLOCK ID	VAPHEAT	VAPCOOL	LIQHEAT	LIQCOOL
MODEL TYPE	HEATER	HEATER	HEATER	HEATER
HEAT DUTY (WATT)	.18970+05	-.85118+05	.39061+05	-.13443+06
EXCHANGER AREA (SQM)				
SIDE 1				
INLET TEMPERATURE (K)	4.1450	1331.0752	4.1339	1033.8456
OUTLET TEMPERATURE (K)	300.0000	4.5000	300.0000	4.2500
INLET PRESSURE (ATM)	0.9000	18.0000	3.9500	13.3000
OUTLET PRESSURE(ATM)	0.8000	3.3000	1.0500	1.2000
PRESSURE RISE (ATM)	-0.1000	-14.7000	-2.9000	-12.1000
INLET VAPOR FRACTION	1.0000	1.0000	0.0	1.0000
OUTLET VAPOR FRACTION	1.0000	0.0	1.0000	0.0

Figure 1

SCHEMATIC OF THE SSC MAGNET ARC SECTOR

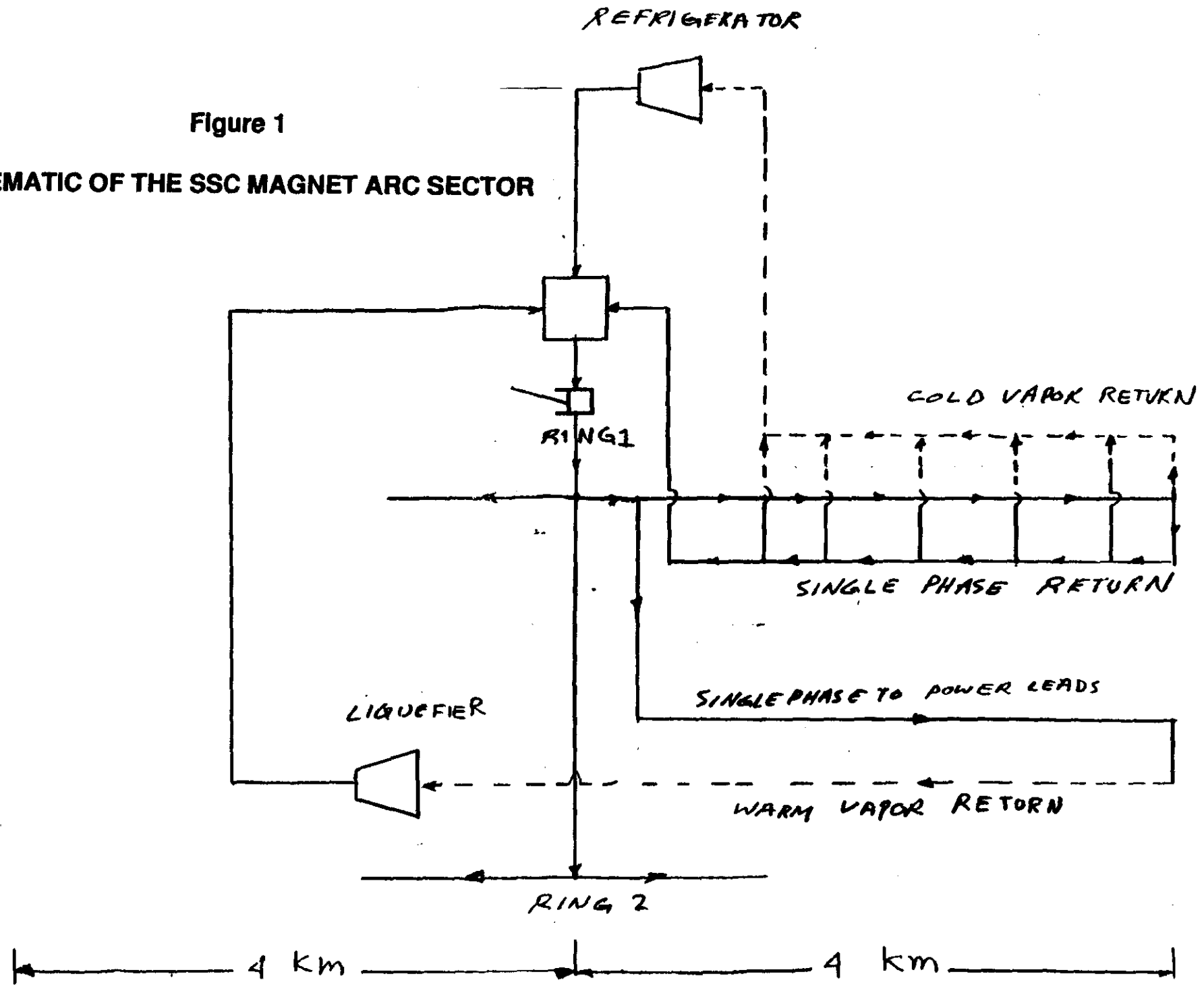

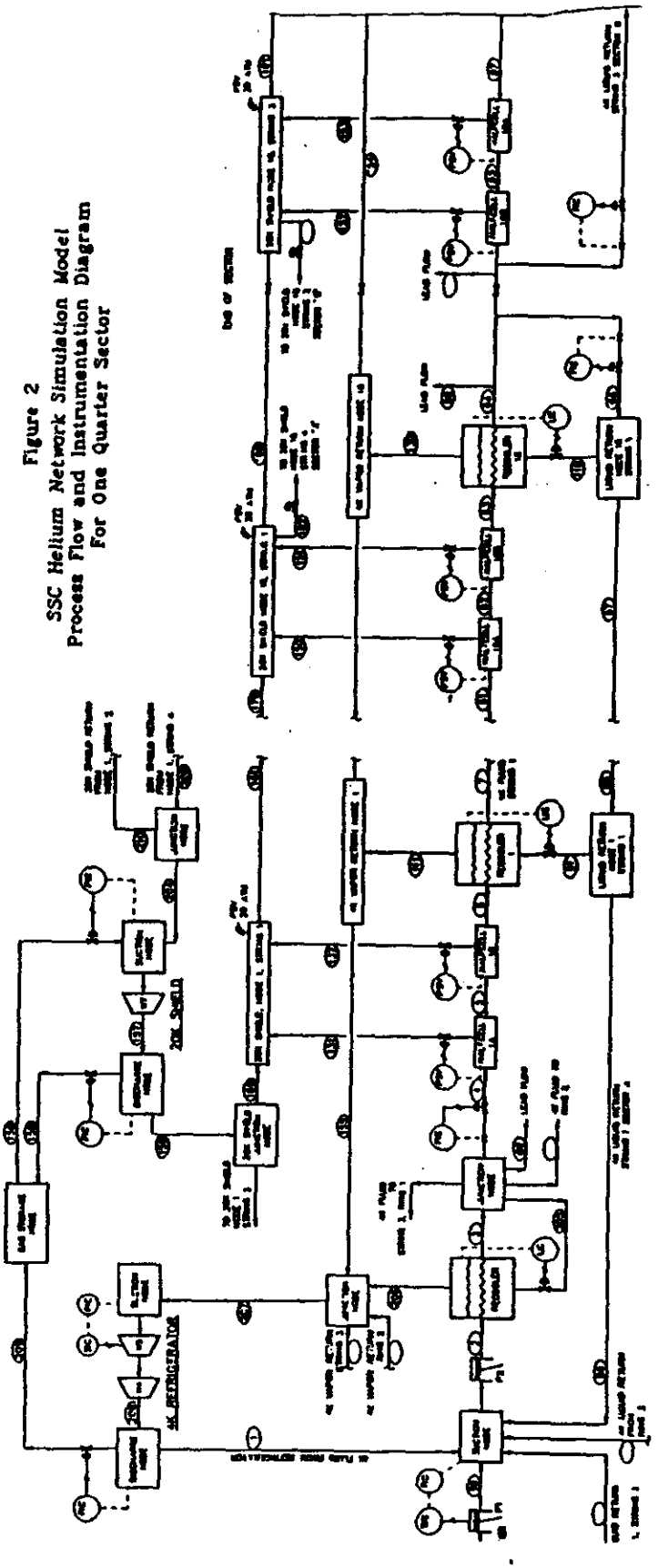

Figure 2
SSC Helium Network Simulation Model
Process Flow and Instrumentation Diagram
For One Quarter Sector

Figure 3
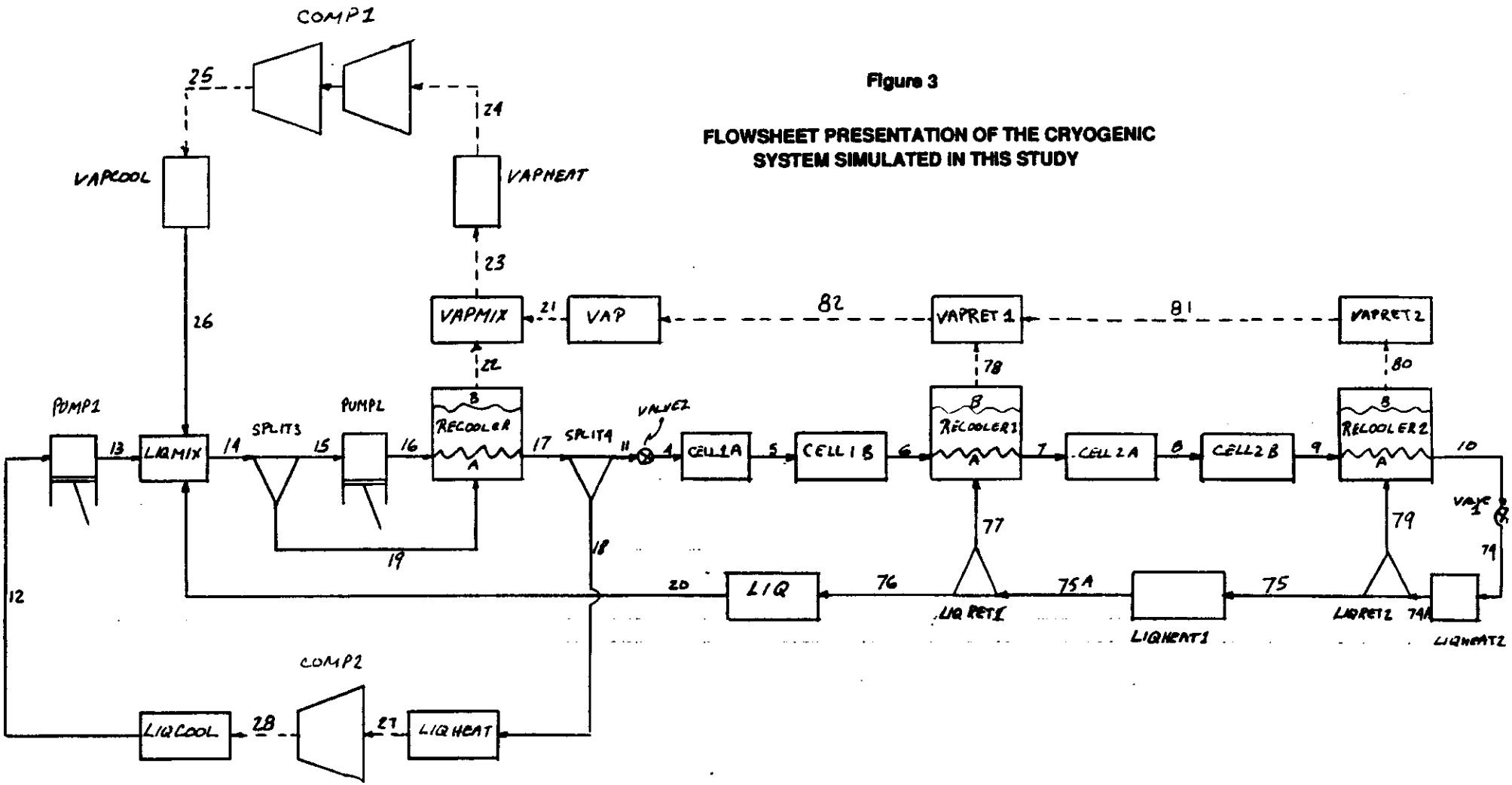
FLOWSHEET PRESENTATION OF THE CRYOGENIC SYSTEM SIMULATED IN THIS STUDY