A TECHNIQUE FOR EPOXY FREE WINDING AND ASSEMBLY OF COS θ COILS FOR ACCELERATOR MAGNETS

J. A. Carson, R. Bossert
Fermi National Accelerator Laboratory*
P. O. Box 500
Batavia, Illinois 60510

Abstract

Traditional methods of magnet construction (wet winding) use molded coil subassemblies bonded together with epoxy impregnated fiberglass tape. This is a highly labor intensive process involving redundant operations for each of the four coils. The epoxy free winding technique (dry winding) eliminates the epoxy curing steps and also allows all four coils to be wound on a common winding mandrel, thereby reducing winding stations and handling. The tooling required for dry winding is a radical departure from existing technology imposing new mechanical problems. A number of 64 cm long 5 cm aperture SSC Design "B" magnets have been produced at Fermilab utilizing dry winding techniques. Discussed is the specialized tooling created to accomplish dry winding as well as new winding and assembly procedures required. Also discussed are mechanical problems encountered and their solutions. Based on experience gained, dry winding can be a viable lower cost alternative to traditional coil fabrication techniques.

Introduction

Dry winding is a term used to describe an epoxy free[1] alternative to currently utilized (wet winding) coil winding techniques employing epoxy in the fabrication and assembly of superconducting accelerator magnets, such as the Tevatron dipole or the proposed SSC dipole magnet. Dry winding can offer cost advantages through the reduction of assembly labor and capital equipment for tooling and floor space. A series of magnets have been produced at Fermilab aimed at exploring the feasibility of the dry winding process.

Wet Winding Versus Dry Winding

The wet winding process utilizes superconducting cable insulation which has applied to it a "B" stage (thermosetting) epoxy. This can be in the form of epoxy impregnated fiberglass tape (Tevatron and SSC) or can be epoxy applied directly to the outer surface of the primary insulation (usually polyimide film). The insulated cable is then wound onto special winding mandrels followed by molding in precision presses under heat and pressure to obtain the desired coil geometry. Variations in cable thickness from lot to lot often requires remolding to achieve the desired coil size. The extent of remolding is ascertained through measurement of the molded coil assembly. This process is repeated for each of the coils used in the magnet (four coils for the Tevatron and SSC designs). The coils are then assembled onto an assembly mandrel (beam tube for SSC) followed by application of appropriate ground plane insulation and finally coil clamp collars are applied.

The dry winding process has no epoxy on the cable insulation. Instead of winding and molding individual coils, all the coils are wound onto a special mandrel. Once wound the coils stay on the mandrel which is then utilized as an assembly mandrel not to be removed until the clamp collars have been applied. Control of coil to coil size matching is accomplished by selection of cable of uniform size for each of the coils. This requires continuous measurement of the cable during the insulation process using a specialized measuring device[2]. Fig. 1 illustrates these differences in the form of a simplified process flow chart.

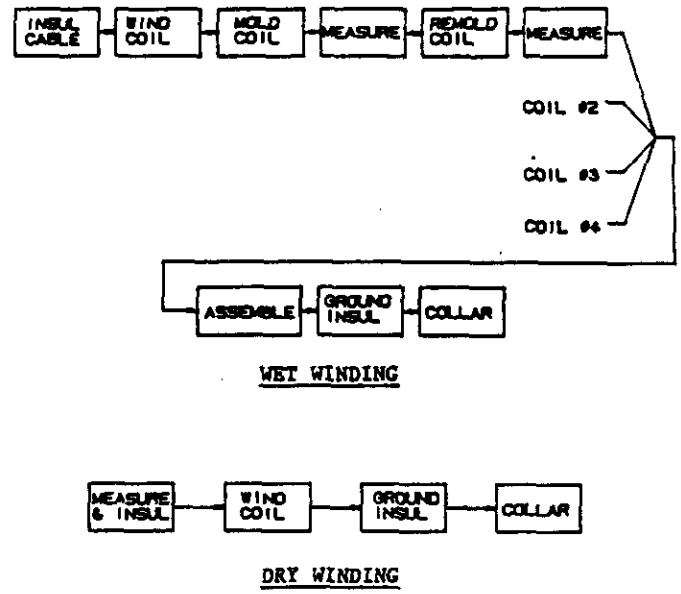

Fig. 1. Process charts showing the difference in wet and dry winding production process.

Tooling Used In Dry Winding

To accomplish the task of winding all coils onto a singular mandrel requires that the mandrel expand to accommodate the uncompressed coil structure. The expansion must be limited to the vertical plane. An expansion in the horizontal plane would not allow placement of the clamp collars. Fig. 2 illustrates the construction of the expanding mandrels used. Two mandrels were made. One with a 5 cm O.D. and another 4 cm O.D. The vertical expansion is 10 mm and 11 mm, respectively.

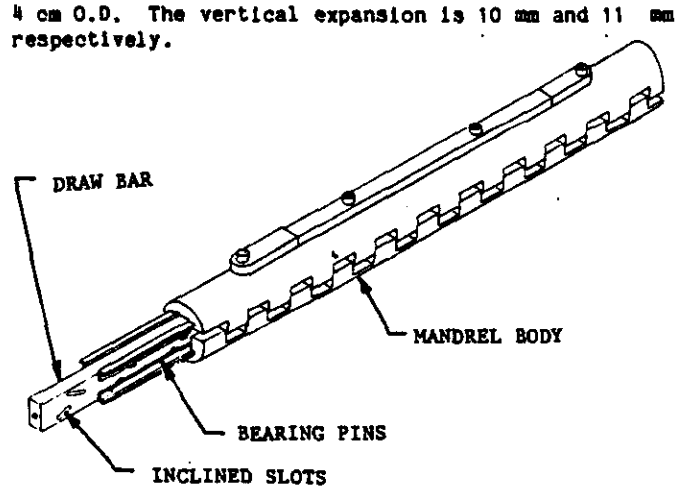

Fig. 2. Illustration of expanded mandrel with end cut away to show mechanism.

*Operated by Universities Research Association, Inc., under contract with the U. S. Department of Energy.

Manuscript received September 30, 1986.

Magnet Fabrication Method

Two magnet designs were fabricated using dry winding: SSC Design "B"' (Fig. 3) 64 cm long and SSC Design "D"' (Fig. 4) 1 meter long. Sixteen Design "B" and two Design "D" collared coil assemblies were completed. In both designs the insulation applied to the cable was a 3 mil total build of polyimide film obtained via spiral wrapping 1 mil material using a 2/3 overlap. The fabrication process starts by winding the upper inner coil layer onto the mandrel; it is then rotated 180° and the lower inner coil is wound. The completed inner coils are fitted with the inter-coil insulation and the assembly then clamped securely to the mandrel using thin polyester film bands. These bands are temporary and are removed later in the assembly. The upper outer cable is spliced to the inner and wound over the inner coil/inter-coil insulation assembly. The mandrel is again rotated 180° and the process repeated for the lower outer coil. Additional polyester film bands are used to clamp the entire assembly to the mandrel only at the ends, after which the bands around the inner coil are cut and removed. Ground insulation is applied to the straight section of the magnet only, with end insulation deferred until later in the assembly. The clamp collars are then applied to the straight section of the assembly. The upper and lower collars are not pressed home at this time, instead they are engaged only with light clamping force sufficient to retain the coil. The polyester bands on the ends are removed and end ground insulation installed followed by assembly of the end collars. Clamping force is applied to the collars in a press designed for that purpose. The collars are not completely clamped at this time, only sufficient clamping force is applied to assure radial positioning of the coils via the still expanded mandrel and the collar. Once accomplished, the mandrel is collasped and collar clamp force increased to completely close the collars. This assures proper radial placement of the coils within the collars. The clamping force is then released and the collars allowed to rebound. The mandrel is then extracted and clamping force reapplied. The locking keys are then installed into the collars completing the assembly.

Fabrication Experiences

Considerable difficulties that were encountered early on in the fabrication of these magnets were almost entirely manifested in layer to layer coil shorts, primarily near the magnet ends. These shorts were due to various sources which became clearer as corrections were applied throughout the magnet series. Unlike wet wound coils where the cables are bound to one another, the dry wound cables are free to move out of radial position. Through the straight portion, this is hardly a problem. However, as one approaches the ends, stresses in the cable caused by bending result in the cable to radially push outward from the mandrel. The result being that the inner cable extrudes into the space occupied by the outer cable with a resultant interweaving of the inner and outer coil layers. When the collars are applied and pressed to closure, the interweaved inner and outer turns shear through the insulation system causing layer to layer (inner to outer) shorts (Fig. 5). This problem was remedied by replacing the 10 mil thickness polyimide inter-layer insulation at the ends with a layer of 30 mil thick G10 (Fig. 6). The G10 is sufficiently stiff to prevent encroachment of the inner windings into the outer windings.

Although this solution worked, it did not address the root causes of the problem - namely bending the

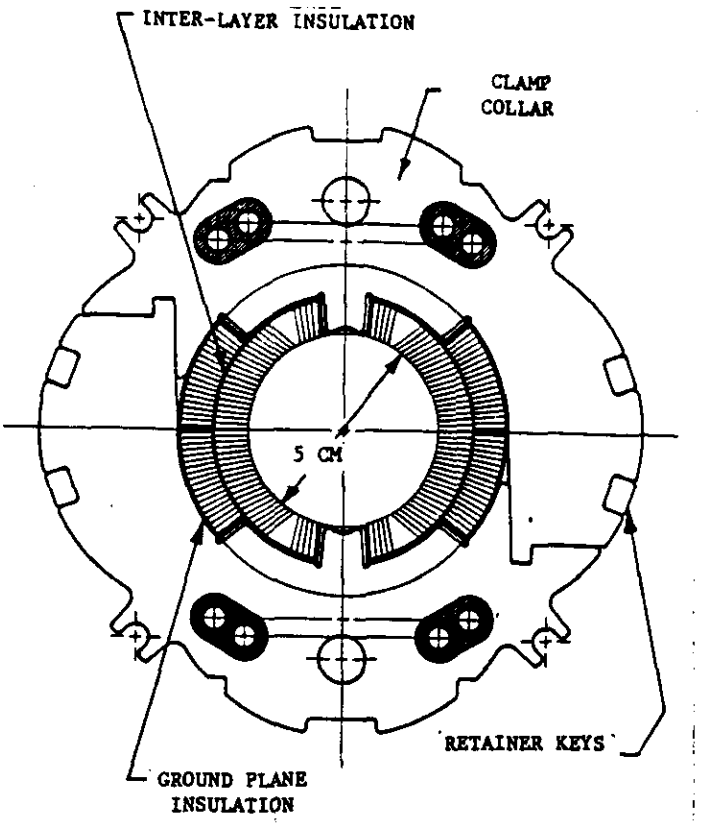

Fig. 3. SSC Design "B" Collared Coil Cross Section

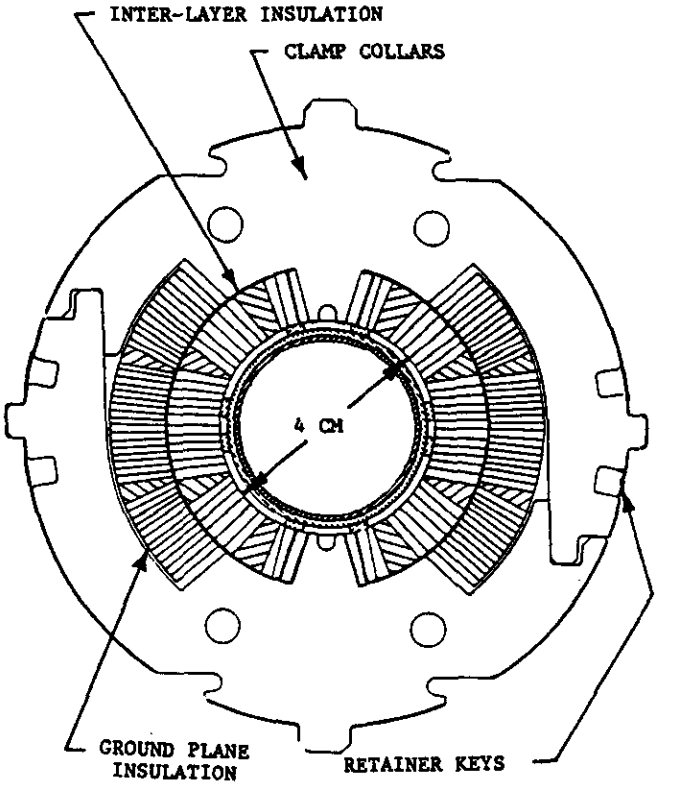

Fig. 4. SSC Design "D" C5 Cross Section

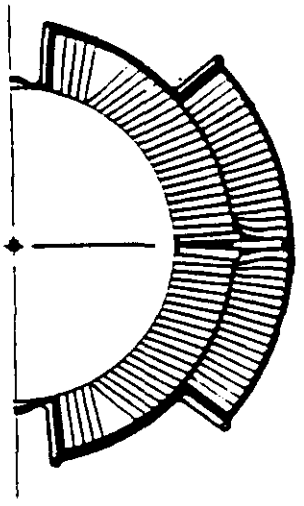

Fig. 5. Illustrating the encroachment on inner cable windings into the outer winding.

cable at the ends without regard to the geometry required. To correct this condition requires the use of a constant perimeter end geometry[5] allowing the cable windings to more closely follow the cylindrical form of the winding mandrel. Hand fitted end parts approximating constant perimeter ends were used with good results. Another contributor to layer-to-layer shorts is the relative size and preload of the inner and outer coil layer. Operationally, the inner coil should be more heavily preloaded than the outer coil, however, the dry winding process would like the outer coil to have a higher preload thereby locking the outer cables together before the inner coil loads can add to the encroachment problem. The solutions for controlling layer-to-layer shorts also help in improving conductor placement (reduction in random harmonic errors).

Turn-to-turn shorts were not a problem throughout the series. Shorts that did occur were in or near the ends and usually attributable to the same problems which caused layer-to-layer shorts.

Other problems were encountered at the magnet ends involving ground plane insulation. The insulation initially used was multi-layers of polyimide film (6 x 5 mil) circumferencially wrapped around the outer coil and G10 end fillers. The

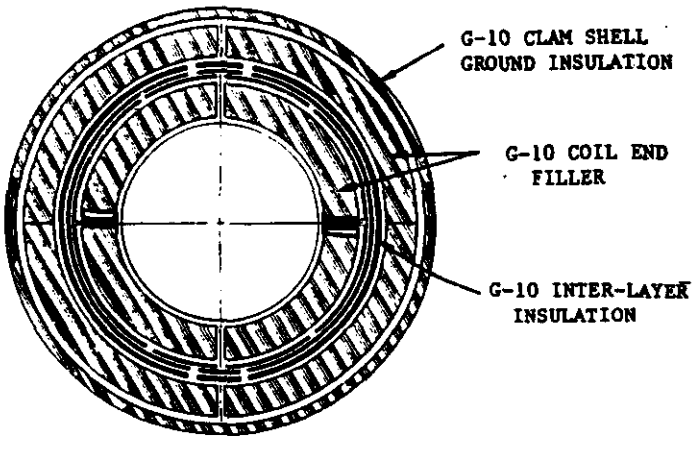

Fig. 6. Cross section through magnet end.

looseness of the precollared package coupled with friction during the collaring operation caused the insulation to wrinkle and move from its intended position often resulting in outer coil shorts to ground. This was overcome by replacing the polyimide film with a clam shell insulator consisting of three laminated layers of 30 mil G-10 (Fig. 6). The additional insulation thickness was accommodated by undercutting the end collars.

Results and Conclusions

The magnets produced in this series performed quite well considering the magnet ends were not optimized for magnet performance. Peak field reduction was approximated and proper compaction of the end winding was given little attention. Rather the program concentrated on the process and tooling for producing dry wound coils using techniques applicable to mass production. Magnet performance is discussed in a companion paper entitled "The 5 cm Aperture Dipole Studies"[6]. The problems encountered are not insurmountable and have solutions but require additional R&D. Perfection of constant perimeter ends is of paramount importance. There are at least two benefits that can be derived from the dry winding experiment. Coil manufacturing technology in general can benefit from the use of the constant perimeter end and the improved methods of cable measuring in wet or dry wound magnets. The dry winding method of producing a collared coil may also prove to be a viable, less costly alternative to the traditional method of making a magnet.

References

1. C. Taylor, et al., "A Novel Epoxy-Free Construction Method for Fabricating Dipole Magnets and Test Results", IEEE Transactions on Nuclear Science, Vol. NS-28, No. 3, 3283, June 1981.

2. J. A. Carson, et al., A Device for Precision Dimensional Measurement of Superconducting Cable", Proceedings to be published for ICFA, 1986.

3. Reference Designs Study for U. S. Department of Energy, "Superconducting Super Collider", May 8, 1984.

4. SSC Central Design Group, "SSC Conceptual Design Magnet Design Details", Attachment B, March 1986.

5. H. I. Rosten, Rutherford Laboratory, "The Constant Perimeter End", RL-73-096, September 1973.

6. A. D. McInturff, et al., "The 5 cm Aperture Dipole Studies", ASC 1986 (these proceedings).