International Cryogenic Materials Conference
Cryogenic Engineering Conference

June 11-18, 1987

Hosted by Fermi National Accelerator Laboratory
Batavia, Illinois, U.S.A.

C
E
ICMC

CRYOGENIC TESTING AT THE SSC STRING TEST FACILITY

J.C. Theilacker

Fermi National Accelerator Laboratory*
Batavia, Illinois

ABSTRACT

A multipurpose cryogenic testing facility was constructed and became operational in 1986 at Fermilab. It consists of a standard Tevatron satellite refrigerator and 450 liter subcooling dewar housed within a building adjacent to a Tevatron refrigerator. A 11 m by 15 m high bay contains power supplies necessary to power Superconducting Super Collider (SSC) magnets, a cryogenic feedcan to interface the refrigerator to the magnet string, and an area for testing Tevatron components. Currently, a 120 m, 4 m diameter tunnel has been constructed off the high bay to house a half cell of SSC Design D magnets. Capabilities have made to extend the tunnel up to 1 km in length.

Testing at the facility includes: SSC long string test, heat leak measurement, cold compressor tests, turbine test, and cold leak checking.

INTRODUCTION

The proposed SSC is a 20 TeV proton synchrotron [1]. It utilizes nearly 10,000 superconducting dipole and quadrupole magnets to steer the protons around its 83 km circumference. To cool the magnets to 4.3 K, there will be ten refrigeration stations spaced around the ring. Each of these refrigerators will cool four 4 km long magnet strings.

The primary collider components are the 7680 dipole magnets for bending the proton beam to form the closed orbit path. Each dipole is 17 m long, utilizes cold iron to achieve 6.6 T field, and is housed in a low heat leak cryostat[2]. To date, three full length prototype dipoles have been manufactured. Cryogenic, electrical, and magnetic testing of individual magnets are being done at the Magnet Test Facility (MTF) at Fermilab. Results of these tests have been presented by Strait[3,4].

Following individual magnet testing at MTF the magnets are sent to a new facility where they are being assembled into a magnet string. Incorporation of a magnet string up to 1% of the SSC length will be possible. Testing of a long string of magnets is critical in assuring

* Operated by Universities Research Association, Inc., under contract with the U.S. Department of Energy.

that the magnet design is electrically and cryogenically, compatible with the SSC project. Also, it will allow operational feedback to be incorporated into the final component design.

This paper will describe the string test facility built at Fermilab, and present the cryogenic testing plans through FY88.

SYSTEM DESCRIPTION

The string test facility is located adjacent to the berm of the main ring tunnel, at the E4 Tevatron refrigerator. It consists of four main enclosures; a refrigerator building, a 11 m by 15 m utility building, a "tunnel" section, and a control room (Fig. 1). The refrigerator building is built directly off the E4 Tevatron satellite refrigerator. This allows direct access to several Tevatron utilities such as; subcooled liquid nitrogen and 4.5K supercritical helium from the transfer line, low conductivity water for power supplies and bus work cooling, and connection to the ACNET controls system.

Directly between the refrigerator building and mock tunnel section is the utility building. It has a high bay area for off-loading and staging equipment. Power supplies for the string test have been installed here along with the feedcan to interface the refrigerator to the magnet string.

Extending from the utility building is a 120 m long mock tunnel section, enough for a SSC half cell. The tunnel is made up of a concrete slab and 4 m used tunnel sections from the main ring. In order to follow the terrain, the slab (and thus the magnets) is installed with a 0.4% downward grade. This allowed the slab to match with Kautz Road. Beyond a half cell, the "tunnel" will follow the road bed and have a maximum length of 1.2 km.

The refrigeration system consists of a standard Tevatron satellite refrigerator (1000 W at 4.5 K) with two dedicated screw compressors for steady state operation (Fig. 2). The compressors will be common with the Tevatron system during system cooldown and heat leak measurements. During power testing, the compressors will be isolated from the Tevatron to prevent quench pressure excursions from effecting the physics program.

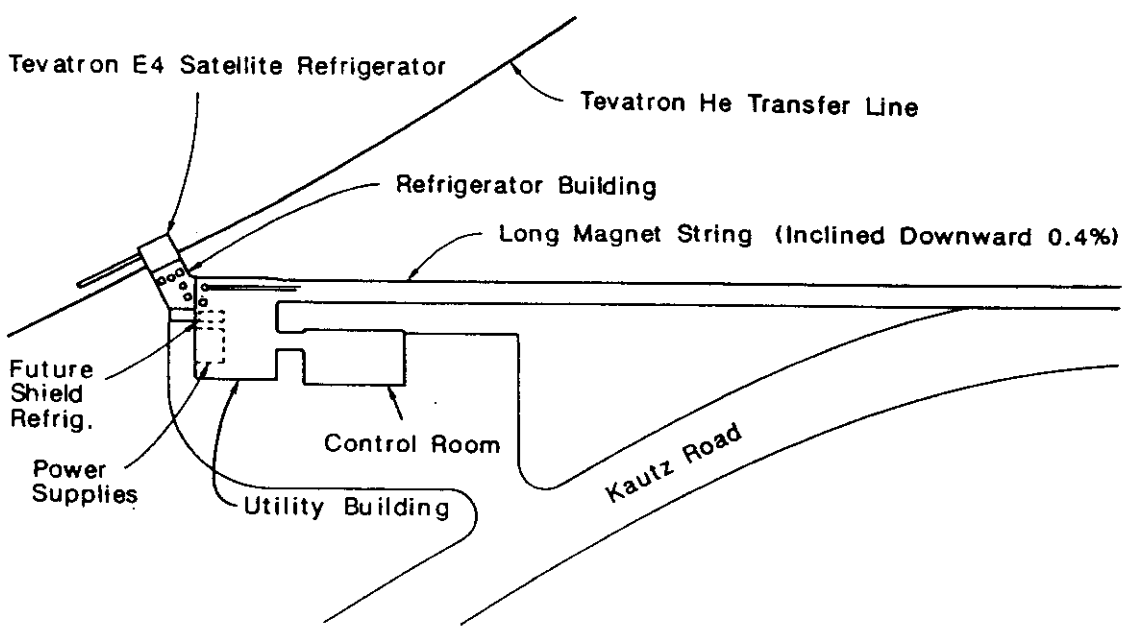

Fig. 1. String test facility layout.

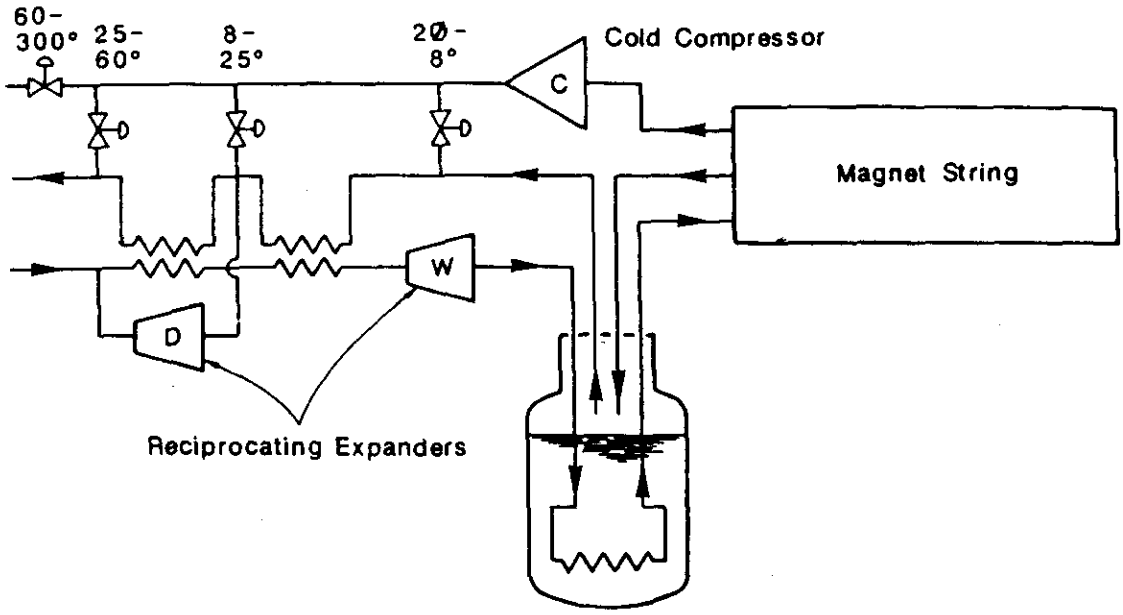

Fig. 2. String test refrigeration system.

Transient conditions (quench recovery, fast cooldown) will be assisted using partial production of the 4500 liter/hour Central Helium Liquefier (CHL) via the Tevatron transfer line. Small refrigerator transients due to controls or "breathing" of inventory within the magnets will be buffered from the magnet string by a 450 liter subcooling dewar. As the string test approaches one percent of the SSC length, a second refrigerator (a prototype Tevatron Satellite) will be added to provide the 20 K shield refrigeration.

Capabilities have been provided to operate at lower temperatures (down to 2.5 K) using a cold compressor. Depending on the configuration, it will pump on vapor between 2.5 K and 20 K. Three bayonets have been added to the coldbox to accept return gas in the temperature ranges (two- phase to 8 K), (8 K to 25 K), and (25 K to 60 K).

Control of the cryogenic system is accomplished by a in-house Z80 based microprocessor system. It is an expanded version of the Tevatron satellite refrigerator control system. Data acquisition hardware has been added for analog to digital input, temperature resisters, strain gauge, digital control and status, and digital to analog output as summarized in Table 1. Builtin software capabilities include independent proportional, integral, and derivative (PID) control loops and finite state machines. Finite state machines can be tailored for automatic system cooldown and quench recovery.

Information is transferred to and from the microprocessor to the Tevatron central control system through a high speed link. This allows for central alarm monitoring, data logging, and remote control of the system.

Table 1. Data Acquisition and Control Capabilities

Device	Channels
Hardware	
Analog to Digital input	96
Temperature Resisters	32
Strain gauge	16
Digital control and status	80
Digital to analog output	4
Software	
PID Control loops	20
Finite state machines	15

TESTING

Testing and development programs for the string test can be separated into three major categories; Installation, Cryogenic, and Power supply/Quench Protection. Although this paper emphasizes the cryogenic aspects, an outline of all three categories of testing is provided below.

Test and Development

Installation

Development:
- A. Installation equipment
- B. Alignment techniques
- C. Leak checking techniques

Cryogenics

Testing:
- A. Heat load measurement 20K and 80K shields
- B. Flow impedance measurement
- C. Fast magnet warmup and cooldown
- D. Ramping effects
- E. Quench effects
- F. Failure mode

Development:
- A. Quench recovery techniques
- B. Control strategies

Power Supply/Quench Protection

Testing:
- A. Peak field capabilities
- B. Cyclic operation
- C. Quench behavior

Development
- A. Quench detection requirement
- B. Energy extraction
- C. Bypass Circuit
- D. Heater requirements

The initial string testing will be with two 17 m Design D dipoles. Although many of the cryogenic and electrical tests are more interesting with longer strings (several cells), there will be much to learn with the first two magnets. The primary cryogenic test will be a heat leak measurement of the 20 K and 80 K magnet shields. Single phase and shield heat leaks for Design D magnets have been measured previously[6]. The unique feature of this measurement will be to include the heat leak of the magnet interconnection region (Fig. 3). Heat leak will be found by measuring the temperature rise from the mid point in one magnet, through the interconnection region, to the midpoint of the second magnet. Heaters at the shield inlets will allow heat leak to be measured as a function of shield temperature. Measurement of the 20 K shield heat leak is particularly important, since earlier measurements showed higher values than expected.

Flow impedance measurement for the five cryogenic circuits (reference magnet cross-section Fig. 4) is particularly important to insure proper system operation during off design conditions (fast cooldown/warmup and refrigeration transport during refrigerator repair). Preliminary measurements will be made at elevated temperature until several cells are installed.

Development of techniques for fast warmup and cooldown of these cold iron magnets is necessary to meet the design criteria of 24 hours warmup or cooldown time. Two parallel paths of heater cables have been installed in the single phase bypass holes of the iron in the first magnets (final design will have separate penetrations in the iron for the heater cables). Time and temperature safety circuits will assure that the coil is not overheated.

The final design of the SSC requires that liquid helium (or liquid nitrogen for the 80 K shield) be used as a cooldown source for a room temperature string of magnets. Studies will be done to test for yielding on problem areas, bowing of the shields, and sticking of the slide mechanisms as cooldown parameters approach design.

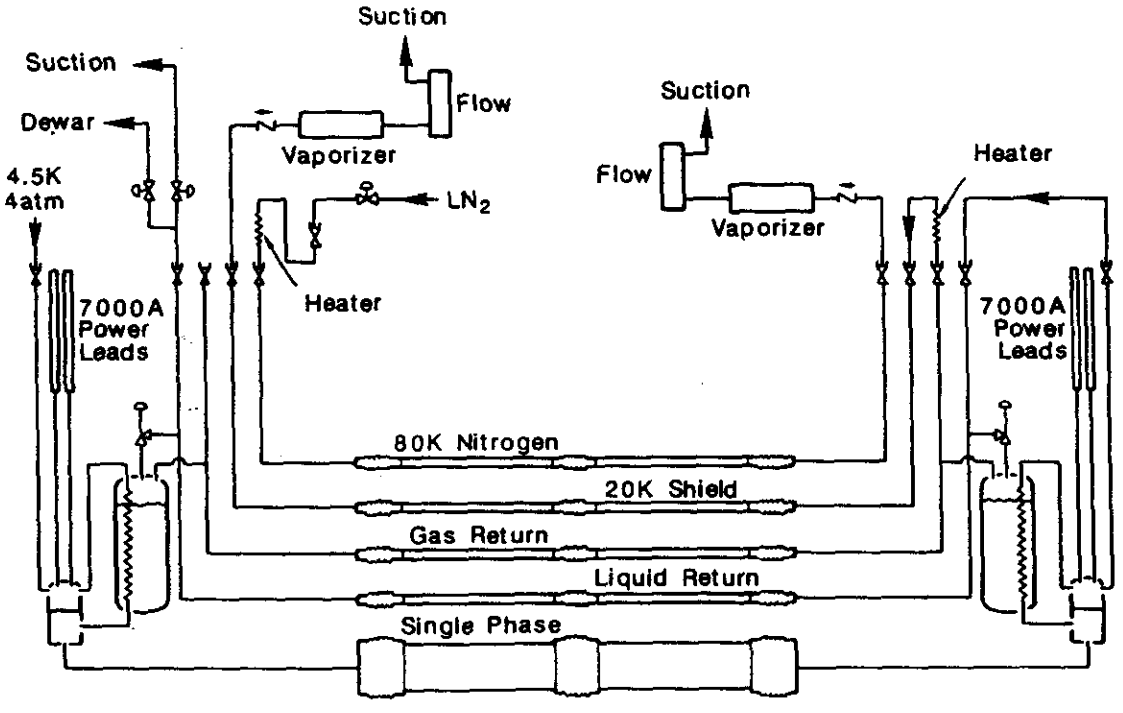

Fig. 3. Magnet string schematic.

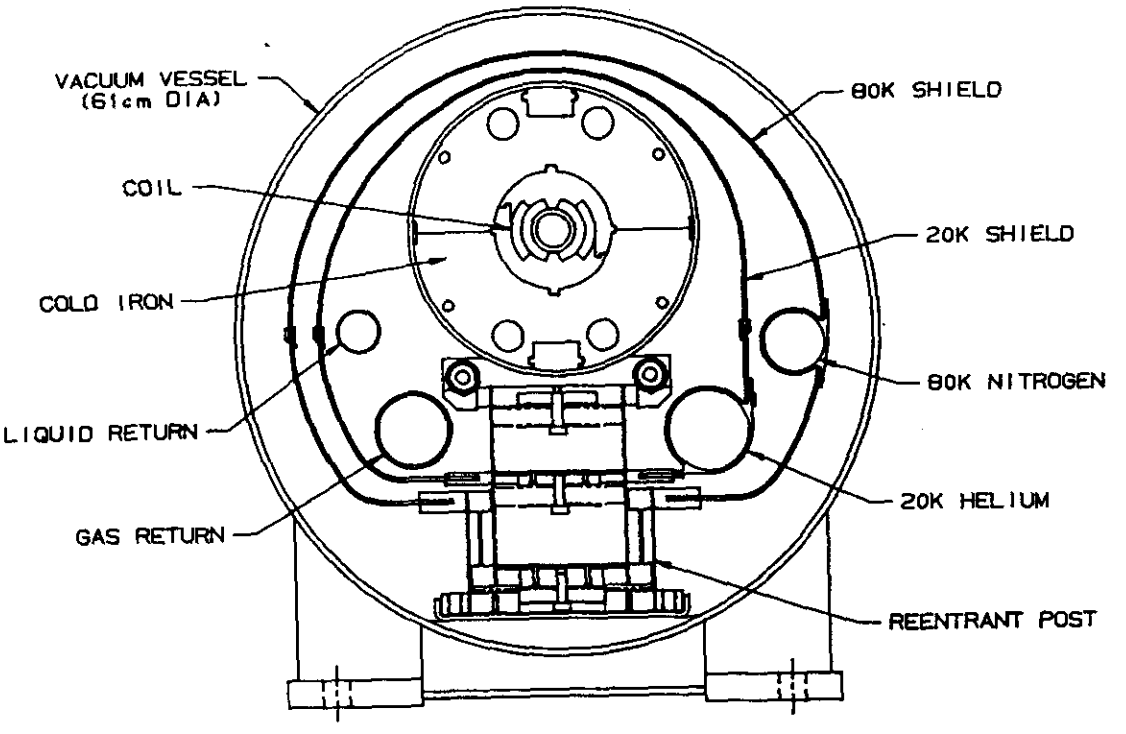

Fig. 4. Cryostat cross section at a suspension point.

During the power supply/quench protection testing, the magnets will be ramped (repeated cycle powering the magnets from injection energy to a given magnet field). The AC losses (hysterisis and eddy current) which result will be used to study the "breathing" effects of the magnet string. These AC losses can be used to simulate synchrotron radiation loading.

Quench effects will be studied to determine peak temperatures and pressures associated with a string of magnets for various types of quench protection schemes. These tests are particularly important on a string of magnets, since quench reliefs are planned only in spool pieces (120m spacing). Initially, the single phase will be relieved to compressor suction through warm relief valves. In parallel, a development program is underway for a "cold relief" (single phase to 20 K shield). To help see the effects of a quench, a circular data buffer has been developed to capture eight channels of cryogenic data at a rate of 300 Hz.

Preliminary quench recovery technique will be developed on a two magnet string and incorporated into finite state machine software. Detailed quench recovery will require several cells of magnets, including realistic spool pieces.

Simulation of SSC failure modes will take place at the string test for the following conditions.

- Vacuum avalanche
- Power outage
- Cryogenic rupture

Vacuum avalanche following quenches can be difficult to recover from, particularly on very long strings. During power outages inventory is stored in the magnets by allowing all cryogenic circuits to pressurize to 20 atm. Design heat loads will prevent inventory loss for up to 30 hours. Controlled simulation of cryogenic ruptures could be valuable in addressing safety issues such as: vacuum space relieving, use of carbon steel vacuum vessels, or release rates for ODH calculations

CONCLUSIONS

A long string test is an important verification of the SSC systems design. Test results will allow early feedback to systems design for deficiencies or to improve operations and reliability.

REFERENCES

1. M.S. McAshan, "Refrigeration Plants for the SSC", SSC-129, SSC Central Design Group, Lawrence Berkeley Laboratory, Berkeley, California (1987)
2. T. Nicol et al, SSC magnet cryostat suspension system design and performance, presented at the 1987 Cryogenic Engineering Conference, St. Charles, Illinois.
3. J. Strait et al, "Tests of Prototype SSC Magnets," T-1451 (SSC-N-321), Fermi National Accelerator Laboratory, Batavia, Illinois (1987).
4. J. Strait et al, "Full Length Prototype SSC Dipole Test Results," T-1450 (SSC-N-320), Fermi National Accelerator Laboratory, Batavia, Illinois (1987).
5. T.J. Peterson and J.D. Fuerst, Tests of cold helium compressors at Fermilab, presented at the 1987 Cryogenic Engineering Conference, St. Charles, Illinois.
6. N.H. Engler et al, SSC long dipole magnet model construction experience, presented at the 1987 Cryogenic Engineering Conference, St. Charles, Illinois.