Fermi National Accelerator Laboratory

TM-1497
[SSC-N-407]

Residual Radioactivity Measurements along the PB Target Pile*

J. D. Cossairt
Fermi National Accelerator Laboratory
P.O. Box 500, Batavia, Illinois 60510

September 1987

*Presented at the Meeting of the Task Force on Radioactivation at the SSC, SSC Central Design Group, Berkeley, California, October 1-2, 1987

Operated by Universities Research Association Inc. under contract with the United States Department of Energy

Residual Radioactivity Measurements Along the PB Target Pile

J. D. Cossairt

September, 1987

In this brief note, measurements of residual radioactivity made along the PB target pile will be described. This was done as a test of the methods described by P. Gollon (Go76) for predicting such radioactivity based upon surface star density calculations using CASIM (Va75). These methods have been extensively used at Fermilab, especially in the design of the Tevatron II target piles. A design goal in these designs was to limit the maximum residual absorbed dose rates at "accessible" locations to 100 mrad/hr after long term irradiations and a one hour decay period (Co83).

Estimating the residual absorbed dose rate for iron is especially troublesome using CASIM star density calculations because of the importance of the hadron (primarily neutron) flux produced below the calculational threshold of 300 MeV/c (47 MeV energy for nucleons). In the above reference, Gollon followed the general idea of the "danger parameter" devised originally by Barbier (Ba69) and wrote the following equation:

$$D = \frac{\Omega}{4\pi}\omega S$$

Here, D is the residual absorbed dose rate due to a "semi-infinite" thick iron slab which has a surface star density rate S (stars cm^{-3} s^{-1}). Ω is the solid angle subtended by the iron object at the point of interest for determining the dose rate and hence, is 2π for measurements "at contact". ω is the parameter determined by Gollon for two different irradiations;

$$\omega = 9 \times 10^{-3} \text{ mrad/h per star cm}^{-3}\text{s}^{-1}$$
for ∞ irradiation time with 0 decay time
&
$$\omega = 2.5 \times 10^{-3} \text{ mrad/h per star cm}^{-3}\text{s}^{-1}$$
for 30 days irradiation time with 1 day decay time.

ω is thus proportional to Barbier's "danger parameter", d. Values for other irradiation and decay times not given by Gollon can thus be inferred by scaling.

The PB target pile was chosen for study because it is a relatively "clean" geometry amenable to modeling with CASIM as is seen in the vertical cross section shown here. This target pile was constructed of new iron shielding and was used for only some low intensity studies during the 1985 physics run. Thus, the present (1987) fixed target run is the "inaugural"run. In fact, over 1/2 of the protons which have ever been delivered to this target were delivered during a 24 day period preceeding these residual dose rate measurements. Thus, to fairly good approximation, after one day of decay (during a two day shutdown), it was possible to obtain results for a 30 day irradiation with one day cooldown and use one of the above ω-values without adjustment. In fact, the week immediately preceeding the residual absorbed dose rate measurements was exceptionally smooth with essentially no "downtime". During this 24 day period, the average rate of targeting was 1.35×10^{10} s^{-1}, if one only counts spills with beam in them. If one divides the total beam by the "real" time, a value of 7.21×10^{9} s^{-1} is obtained. To make the comparison with measured residual absorbed dose rates, I chose the former value based upon the rather steady running during the final week.

CASIM calculations were made in the usual manner, taking care to model the magnetic fields in the target pile magnets. Yoke fields were modeled with analytical formulae which approximate the values of the components B_x and B_y. The star density averaged over azimuth was then tabulated for the outer surface both longitudinally (as a function of Z) and on the front face of the pile (as a function of R). The above formula was used to convert this to the residual absorbed dose rate using the stated

proton intensity.

After a one day decay period, measurements of the absorbed dose rate were made using a standard Geiger-Müller survey instrument. It was found that for the longitudinal measurements, the dose rate at the walls was approximately equal, at contact with them, to that found at the target pile lateral surface. A distinct minimum absorbed dose rate, about 20 per cent smaller than either contact reading, was found halfway between the pile and the more distant parallel wall. The activation of the wall is most likely due to the presence of ^{24}Na ($t_{1/2}$ = 15 h). Therefore, the measured values on the longitudinal scan were divided by two for comparison with these calculations. No such adjustments were deemed necessary for the radial scan across the face of the target pile; no source of significant background upstream of the pile was found. No comparisons are possible downstream of the target pile because of the presence of activated components.

The comparison of the Monte-Carlo predictions with the measurements are shown in the figures. Across the face, the agreement is fairly good, especially given the sensitivity to upstream losses not considered in the calculations. The "humps" seen in the calculations are probably not real, but instead are an artifact of the statistical errors. In the longitudinal scan, the agreement is good in the middle of the pile but fails to "see" the sharp peak in the beam dump region within a factor of four or so. The last measurement point may, in fact be enhanced due the downstream activated components. Some of the "washout" of the predicted structure may, in fact, be due to the crude method of subtracting the wall background. Since the ^{24}Na is produced by *thermal* neutrons, some of the background peak due to the dump is likely to be spread over a larger region of the enclosure.

It is concluded that reasonable accuracy was achieved. It would be desirable to make future comparisons. In fact, a long term cooling curve at the end of the present fixed target run should be taken.

References

Co83 D. Cossairt, memo to K. Stanfield, "Report of the Target Pile Residual Dose Rate Committee" (members: S. Butala, D. Cossairt, R. Currier, D. Eartly, M. Gerardi, J. Lindberg, and R. Stefanski), May 31, 1983.

Go76 P. J. Gollon, IEEE Trans. Nucl Sci. **NS-23 # 4** (1976)1395.

Ba69 M. Barbier, *Induced Radioactivity* (North Holland, Amsterdam, 1979).

Va75 A. Van Ginneken and M. Awschalom, *High Energy Particle Interactions in Large Targets, Volume 1 Hadronic Cascades, Shielding, Energy Deposition,* (Fermilab, 1975).

VERTICAL CROSS SECTION OF PB TARGET PILE
HORIZONTAL SECTION IS SIMILAR
(Concrete walls are 1 m distant on one side,
about 2.5 m distant on other side,
and concrete ceiling is about 5 m above.)

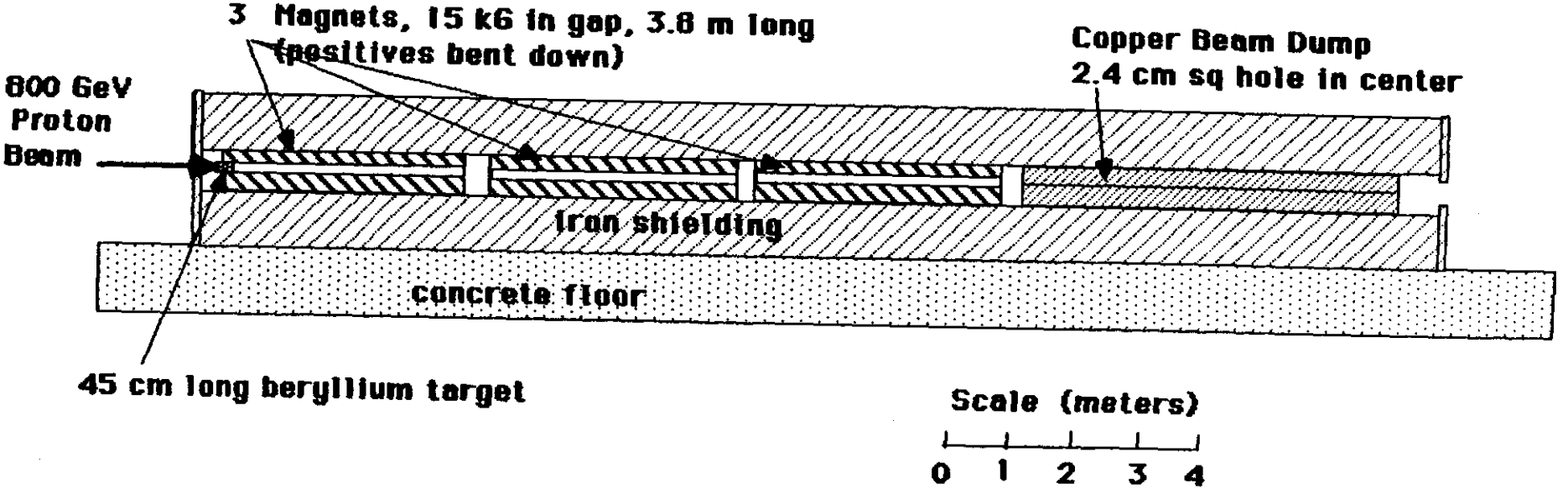

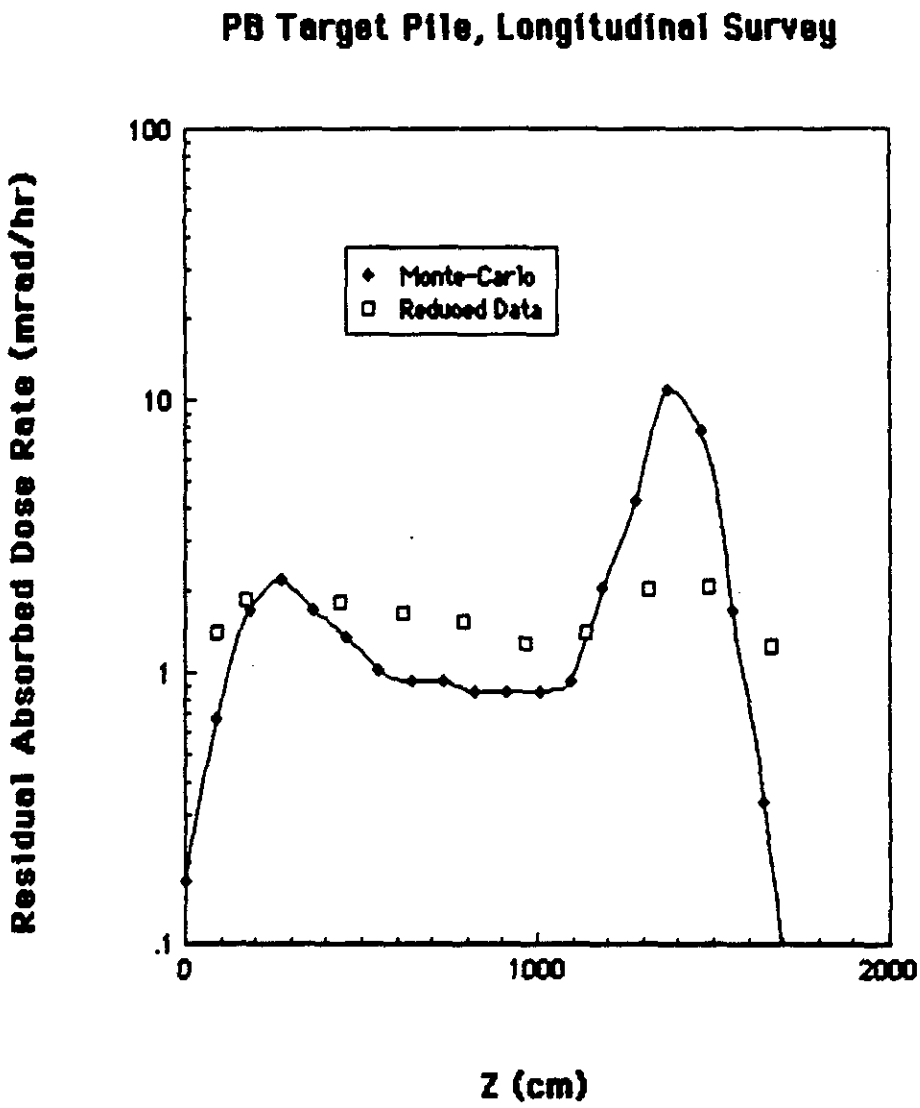
PB Target Pile, Longitudinal Survey
Monte-Carlo
Reduced Data
Residual Absorbed Dose Rate (mrad/hr)
100
10
1
.1
0
1000
2000
Z (cm)

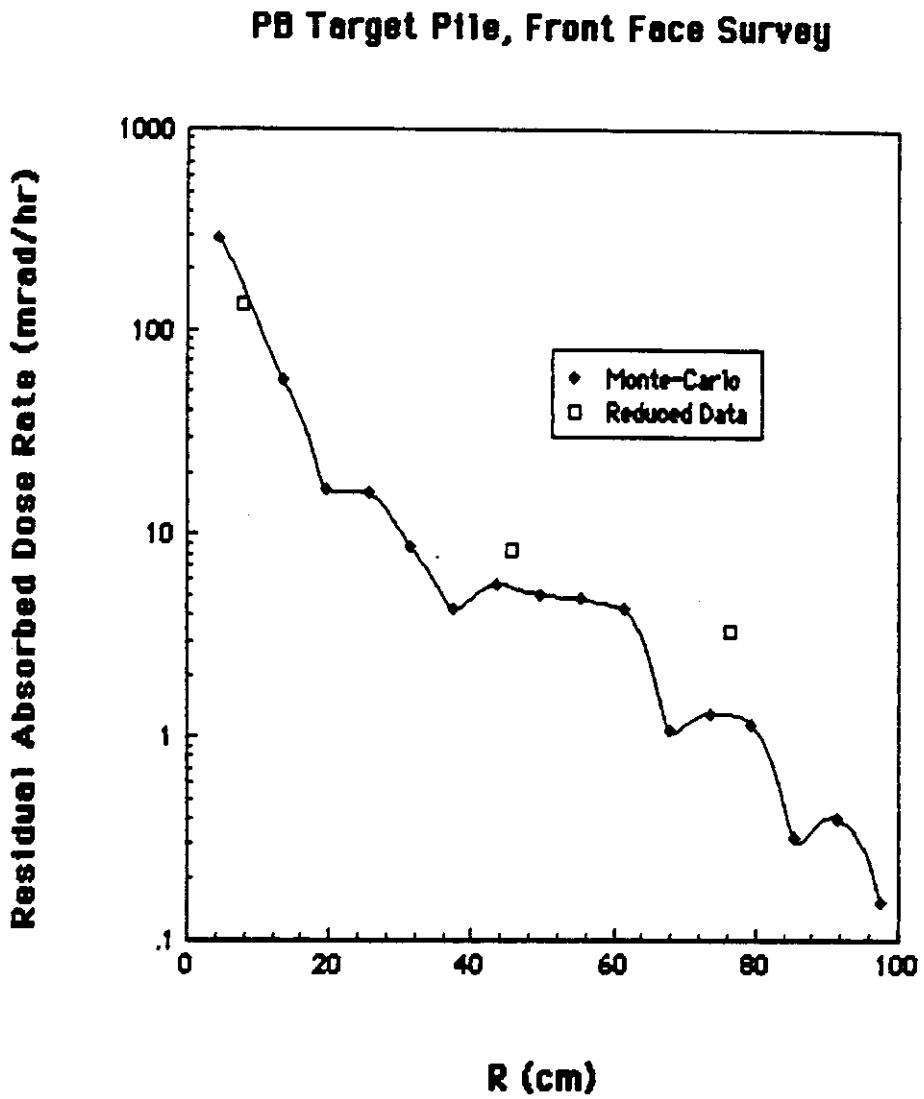
PB Target Pile, Front Face Survey
Residual Absorbed Dose Rate (mrad/hr)
1000
100
10
1
.1
0
20
40
60
80
100
R (cm)
Monte-Carlo
Reduced Data