Configuration of SSC Lattices to the ISP Template

G. Drouet, T. E. Toohig
SSC Central Design Group
November 1987

Prior to the 1986 SSC Snowmass Summer Study, D. Johnson devised an ingenious switching scheme to parallel the cluster region of the SSC lattice with a second branch[1]. This bypass scheme was originally conceived as a way to commission the accelerator without interfering with installation of the experiments. Later it would allow the construction of the future collision halls without turning off the entire experimental program. When presented at the summer study, it was perceived by experimenters as a way to provide a wider variety of interaction regions than were available in the CDR. In particular, it could provide at least one region for experiments with very low values of transverse momentum[2]. The possibility of providing the full complement of IR halls specified for the project while deferring development of the far campus until after initial understanding of the physics was pointed out by Lederman[3,4].

The Invitation for Site Proposals[5] (ISP) issued by DOE included a template to define the land requirements for siting the SSC. The template provided an allowance in the circumference for an additional three cells at each end of the clusters to allow for possible later addition of a bypass. The template from the ISP is shown in Figure 1.

In conjunction with studies on the desirability of using a 90° per cell lattice in place of the 60°/cell design of the CDR, a number of options were studied by D. Johnson and A. Garren. These are related to the ISP template in Figures 2-6. The minimum 90°/cell lattice, Figure 2, falls inside the

template, since no switch allowance is made in the circumference. Figures 3-6 display a range of solutions that will fit the template more or less well, all with switch provisions. A task force under M.G.D. Gilchriese studied the relative costs of the various options[6]. These were tabulated in Table I (after Gilchriese) in anticipation of the SSC 1987 summer study. The bypass option costs are for fully implemented bypasses with four IR crossings in each case.

When the construction and operational features of the monopolar bypass options, Figures 3-6, are studied, two concerns emerge. One is the close spacing of the branches, especially when the size of the IR halls and the finite width of the tunnels are taken into account. The second is the question of muons from the inner branch causing personnel radiation problems in the IR halls of the outer branch hall when the inner branch is operating. This muon problem can be alleviated by a suitable longitudinal offset of the halls in the inner and outer branches to adjust the radial offset of the muon cones from the inner branch at the locations of the IR halls. Figure 7 illustrates both the space constriction and the proximity of the muon cone for the monopolar bypass solutions. The intrinsic difference in length for the two branches of the monopolar solution also leads to a difference in the RF tune for the two branches.

In a refinement of the bypass solution, Johnson and Drouet have developed a bipolar arrangement that eliminates the problems of muon interference and of space limitations for the IR halls. This has been described by Drouet[7] and is illustrated in Figure 8. In Figure 9, an optimized fit to the ISP template is achieved by reducing the magnetic field in the arc dipoles. Figures 10 and 11 are details and illustrate the injection lines for a bipolar and monopolar injector respectively. In this model, the injection line tunnels are contructed

as a FODO channel along the straight line connecting the two arcs. With the addition of a segment to complete the tunnel between the two injection points, the injection lines provide an alternate trajectory for tuning the machine independently of the experimental setups. The Far Cluster, initially, would consist only of such a FODO channel, which might be of conventional quadrupoles. The primary beam aborts would be on this far side, symmetric with the injection short straight sections as illustrated in reference 7.

Details of clearances for IR halls and machine tunnels are shown in Figures 13 and 14. In this bipolar switch arrangement, the muon cone near an IR hall is from another IR hall in the same branch so that it would not be present when there is access to the hall.

A comparison of the relative costs of such a bypass design with estimates of earlier designs is given in Table I, after Drouet.

[1]D.E. Johnson, "A Possible Beam Bypass for the SSC Clustered IR Region," Proc. of the 1986 Summer Study on the Physics of the Superconducting Super Collider, 515-517

[2]E.D. Courant, et al. "Summary Report of the IR Working Group," ibid., 503-514

[3]L.M. Lederman "A One Lab SSC Configuration," ibid, 518

[4]L.M. Lederman, L.C. Teng "A 1-Campus SSC," Fermilab TM-1452 (April 1987)

[5]"Invitation for Site Proposals for the Superconducting Super Collider (SSC)", DOE/ER-0315 (April 1987)

[6]M.G.D. Gilchriese, "Bypass Summary - UPDATE," memo (20 June 1987)

[7]G. Drouet, "Bypass Update," memo (9 November 1987)

	ISP	SINGLE BYPASS	DOUBLE BYPASS	TRIPLE BYPASS
Cost of bypass tunnel (M$)	$ 43	$ 17	$ 21	$ 29
Cost of bypass magnets (M$)	$ 90	$ 35	$ 39	$ 60
AE/CM and EDIA (M$)	$ 20	$ 8	$ 9	$ 13
Contingency (M$)	$ 38	$ 15	$ 17	$ 25
TOTAL (M$)	$192	$ 75	$ 87	$127

Cost per km of tunnel (M$) = 4.00
Cost per magnet (M$) = 0.12

Table I: Cost of bypass only. The costs of the bypass options are crudely summarized based on costs from a note by Jim Sanford of October 9, 1986. The costs per magnet assume some mix of dipoles to quads (about 3:1) which is not too accurate for all the cases - need costs per dipole and costs per quad to make better estimate. Also costs include vertical dipoles. In Jim's note, two different costs per km of tunnel are given. I have taken the larger. AE/CM + EDIA is taken as 15% of the tunnel+magnet costs and contingency is taken as 25% of the tunnel+magnet+AE/CM+EDIA costs.

	1	2	3	4	5	6
Cost of additional tunnel	8	28	32	40	62	52
Cost of additional magnets	8	51	61	82	65	108
AE/CM and EDIA	2	12	14	18	19	24
Contingency	5	23	27	35	36	46
	23	114	134	175	182	230
Number of straights for IR's	6	7(+1)	8(+2)	11(+3)	6(+6)	10
Number of inline IR's	6	6	6	8	0	6

Column 1: 90° lattice plus transition regions to fit within the ISP footprint
Column 2: Single bypass (2 x 1IR + 1IR + 4IR's)
Column 3: Double bypass (2 x 2IR's + 4IR's)
Column 4: Triple bypass (2 x 3IR's + 5IR's)
Column 5: 3-way switch (2 x 3IR's + 2 FODO bypasses)
Column 6: Quadruple bypass (2IR's + 2 x 4IR's)

Table II: Differential costs with basic 90° cell lattice (bypass implemented)

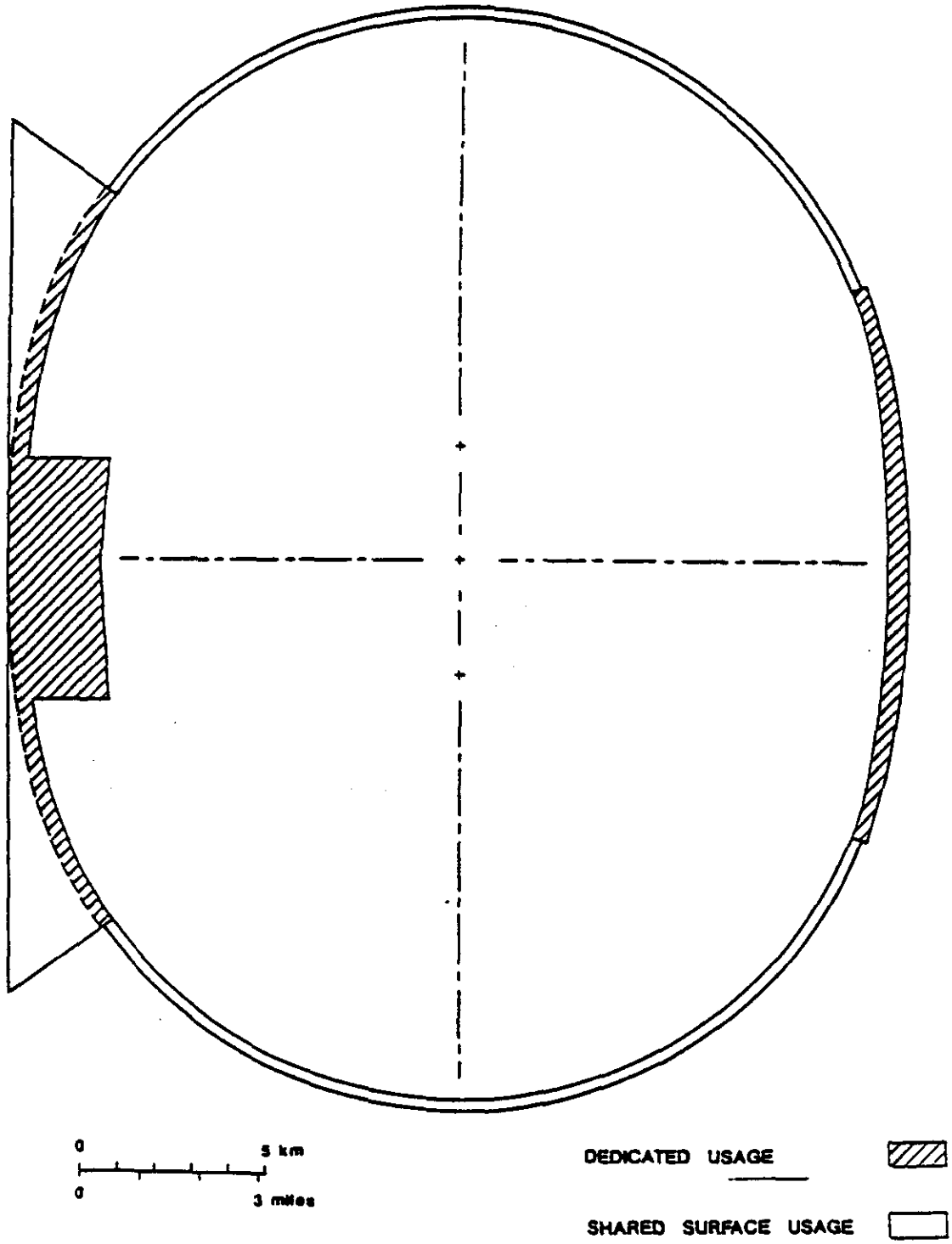

LAND AREAS · FROM I.S.P.

Figure. 1.

SSC CENTRAL DESIGN GROUP	
DRAWING NO. B3A237	TITLE LAND AREAS FROM I.S.P.
SHEET ___ OF ___	DWN BY RM REV DATE
SCALE	APPR BY TT DATE 4-29-87

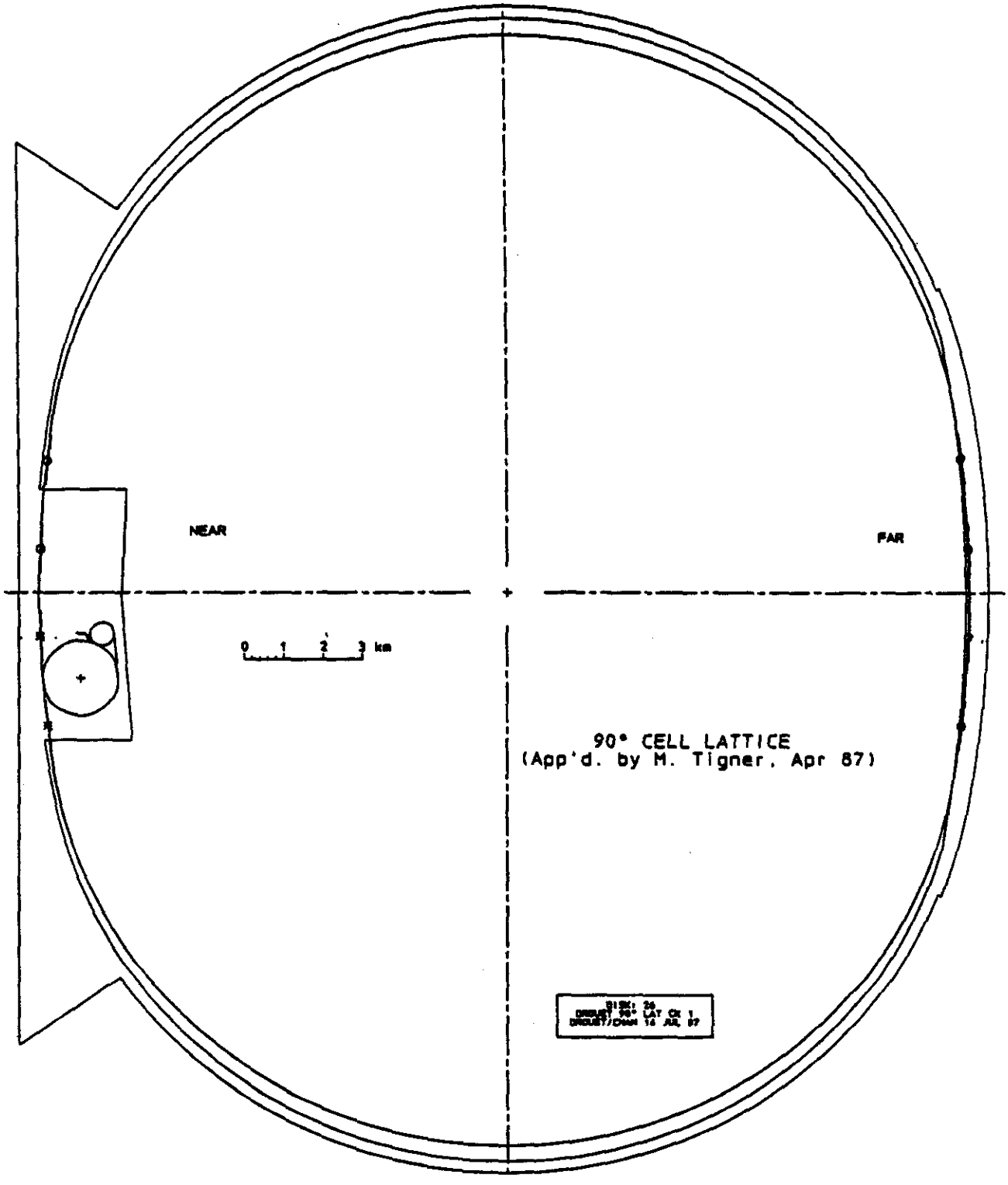

Figure 2.

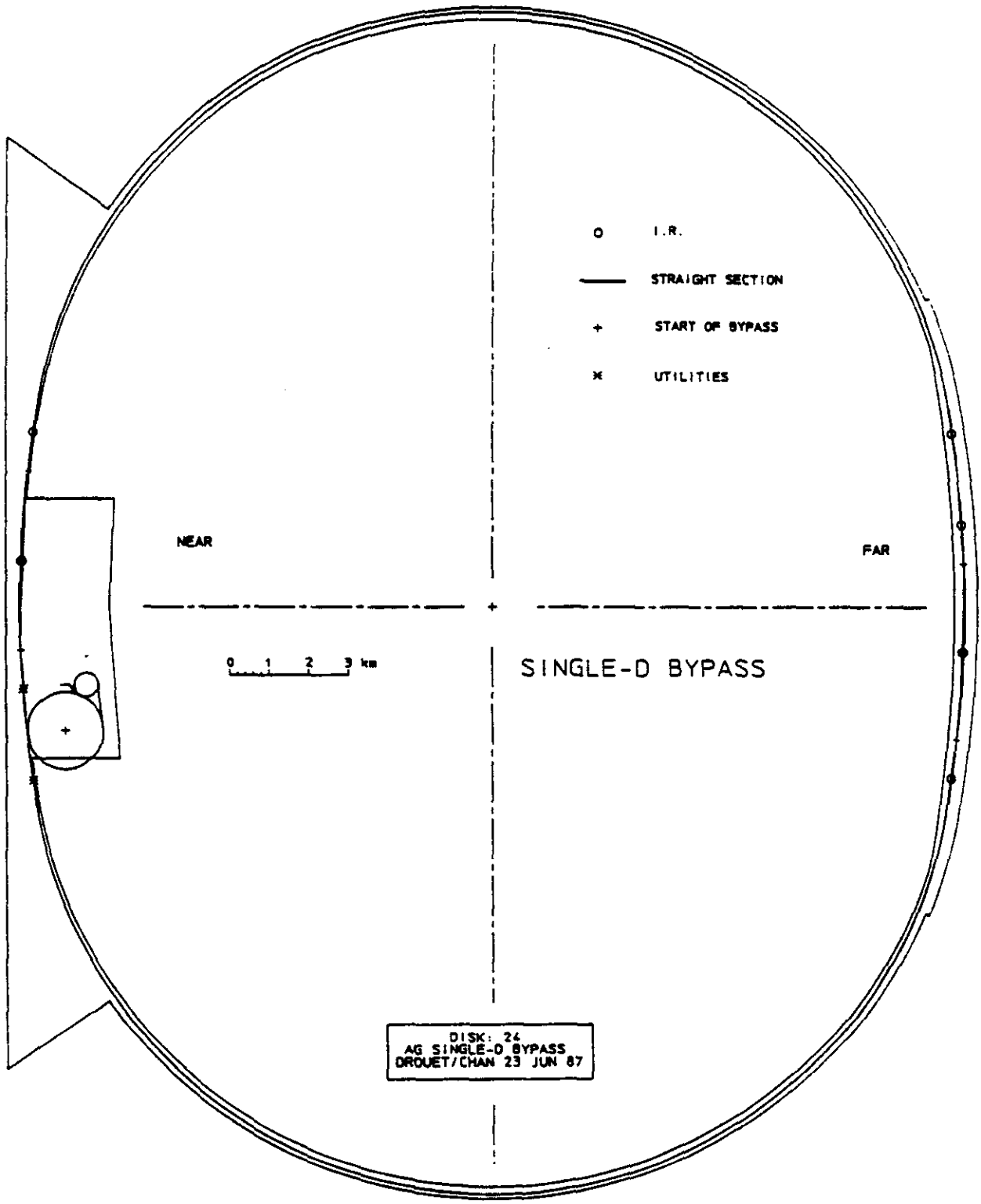
I.R.
STRAIGHT SECTION
START OF BYPASS
UTILITIES
NEAR
FAR
0 1 2 3 km
SINGLE-D BYPASS
DISK: 24
AG SINGLE-D BYPASS
DROUET/CHAN 23 JUN 87

Figure 3.

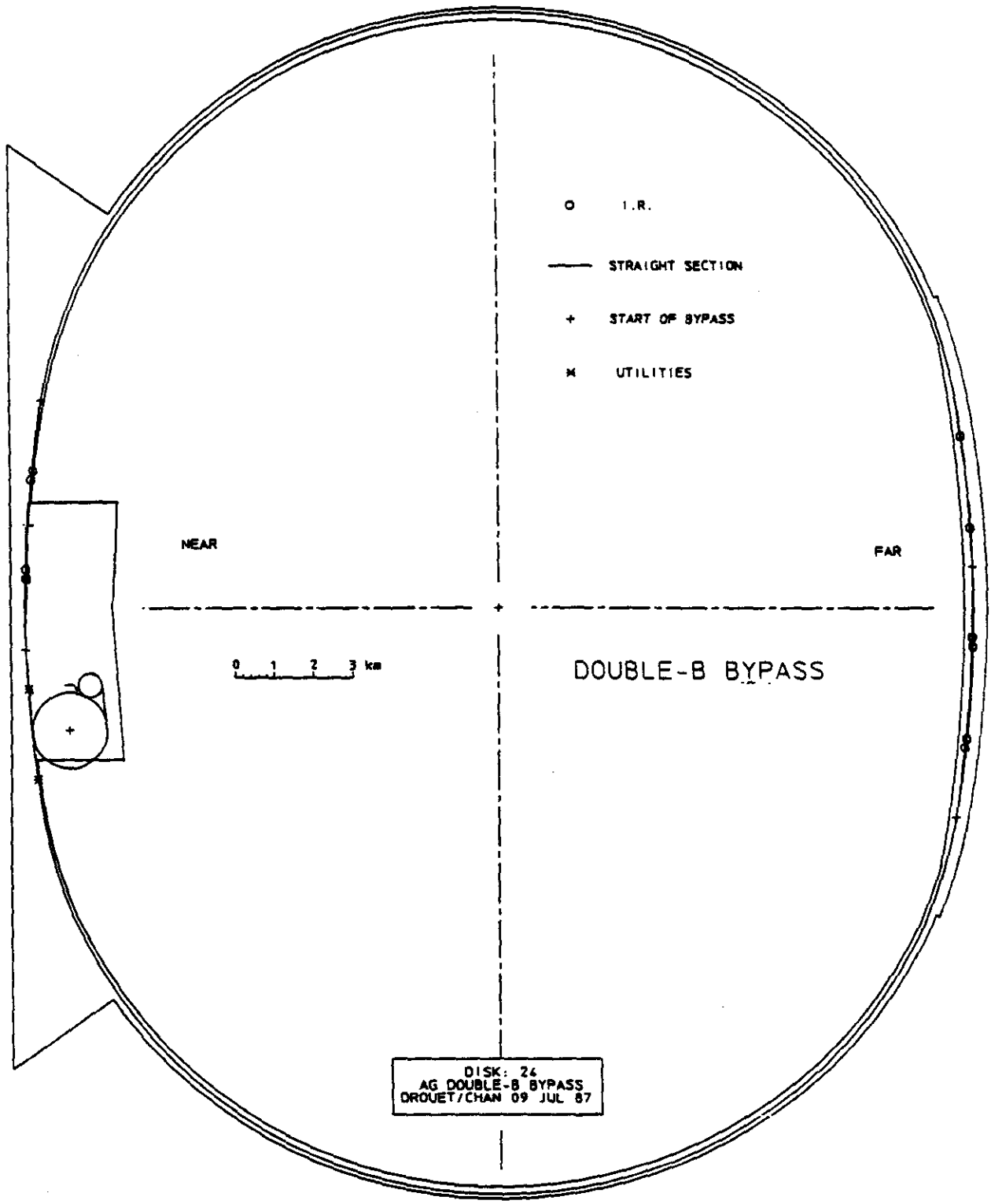
I.R.
STRAIGHT SECTION
START OF BYPASS
UTILITIES
NEAR
FAR
0 1 2 3 km
DOUBLE-B BYPASS
DISK: 24
AG DOUBLE-B BYPASS
DROUET/CHAN 09 JUL 87

Figure 4.

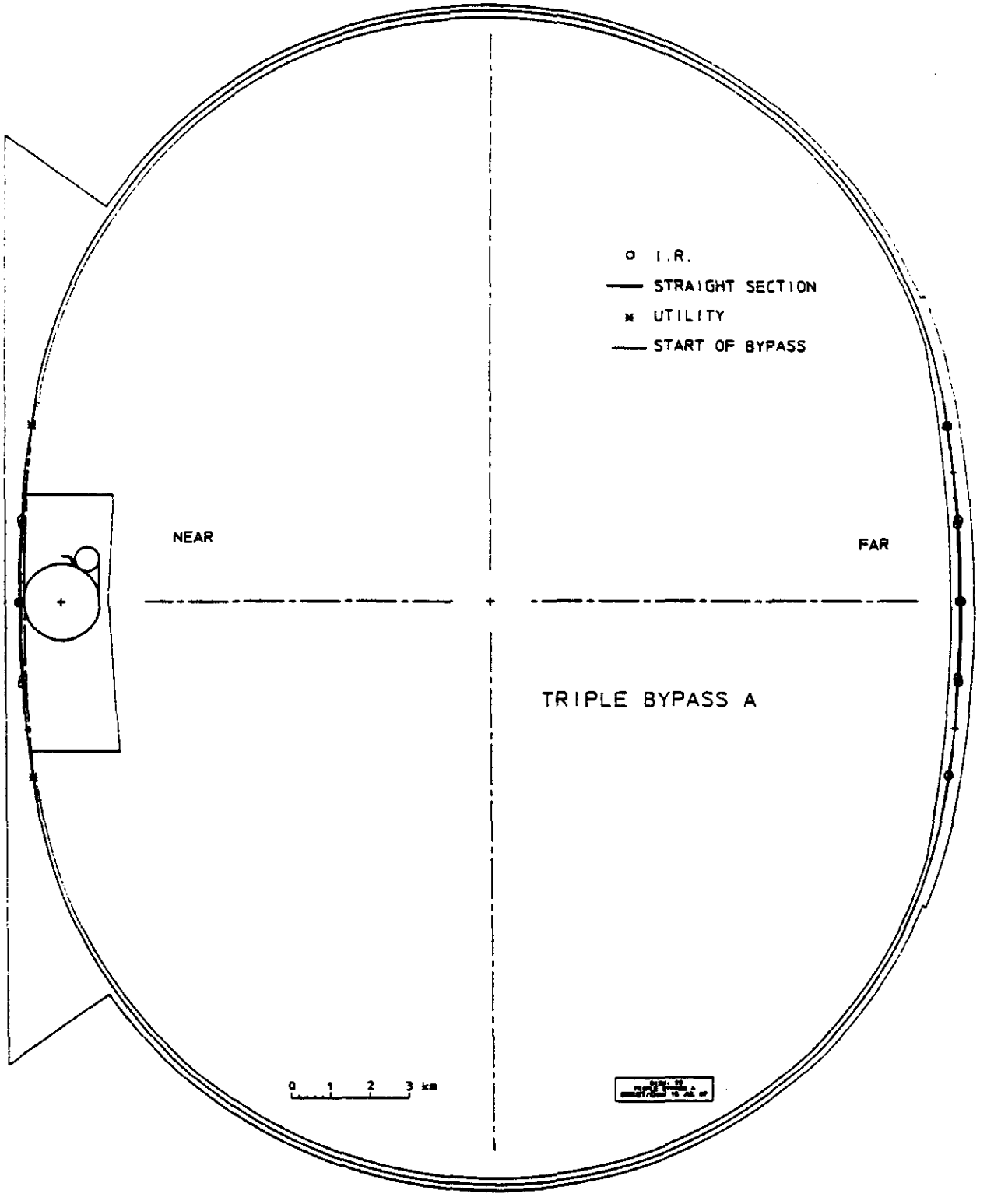
I.R.
STRAIGHT SECTION
UTILITY
START OF BYPASS
NEAR
FAR
TRIPLE BYPASS A
0 1 2 3 km

Figure 5.

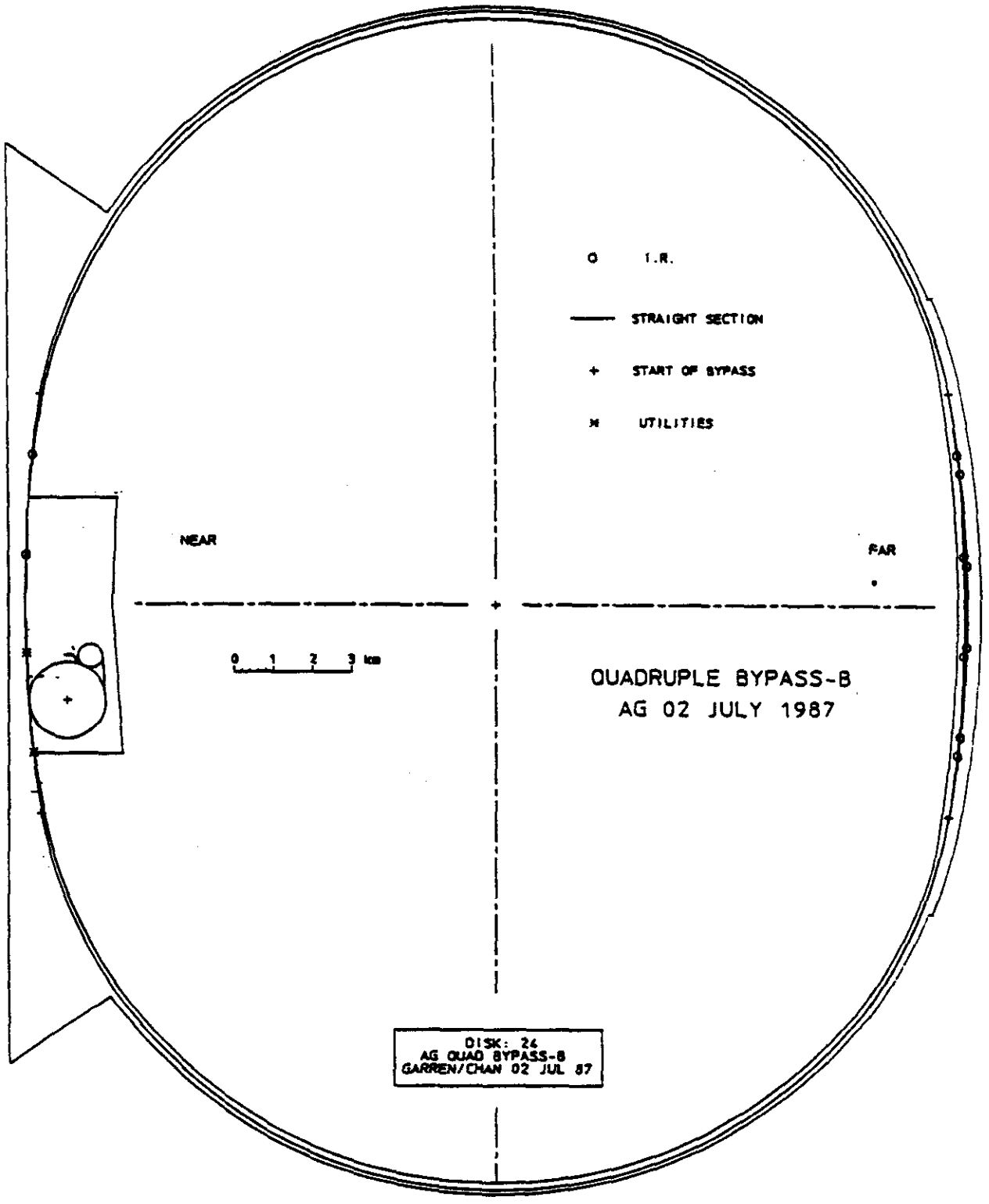
I.R.
STRAIGHT SECTION
START OF BYPASS
UTILITIES
NEAR
FAR
0 1 2 3 km
QUADRUPLE BYPASS-B
AG 02 JULY 1987
DISK: 24
AG QUAD BYPASS-B
GARREN/CHAN 02 JUL 87

Figure 6.

Figure 7.

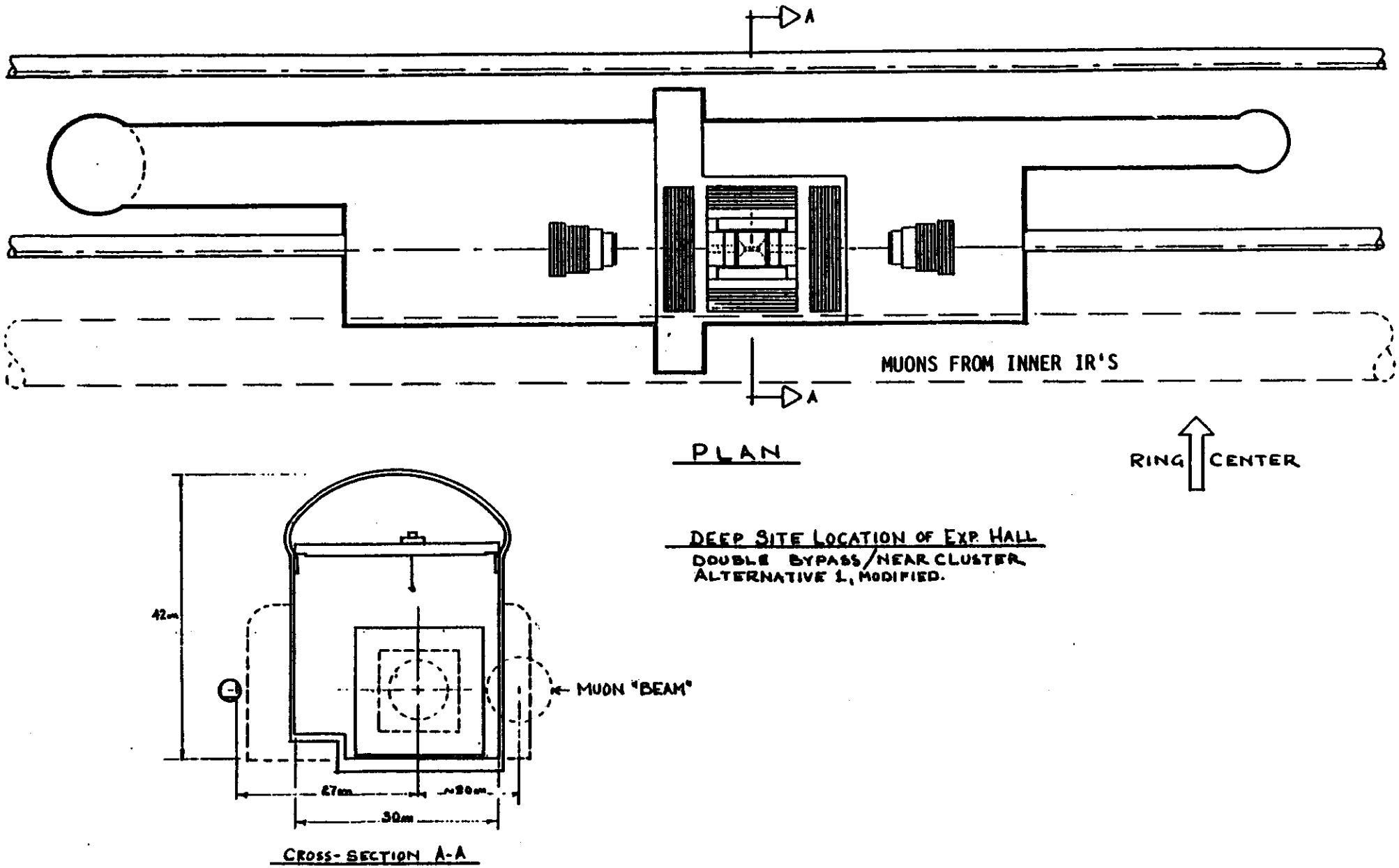
A
A
MUONS FROM INNER IR'S
PLAN
RING CENTER
DEEP SITE LOCATION OF EXP. HALL
DOUBLE BYPASS/NEAR CLUSTER
ALTERNATIVE 1, MODIFIED.
42m
MUON "BEAM"
27m
~20m
30m
CROSS-SECTION A-A

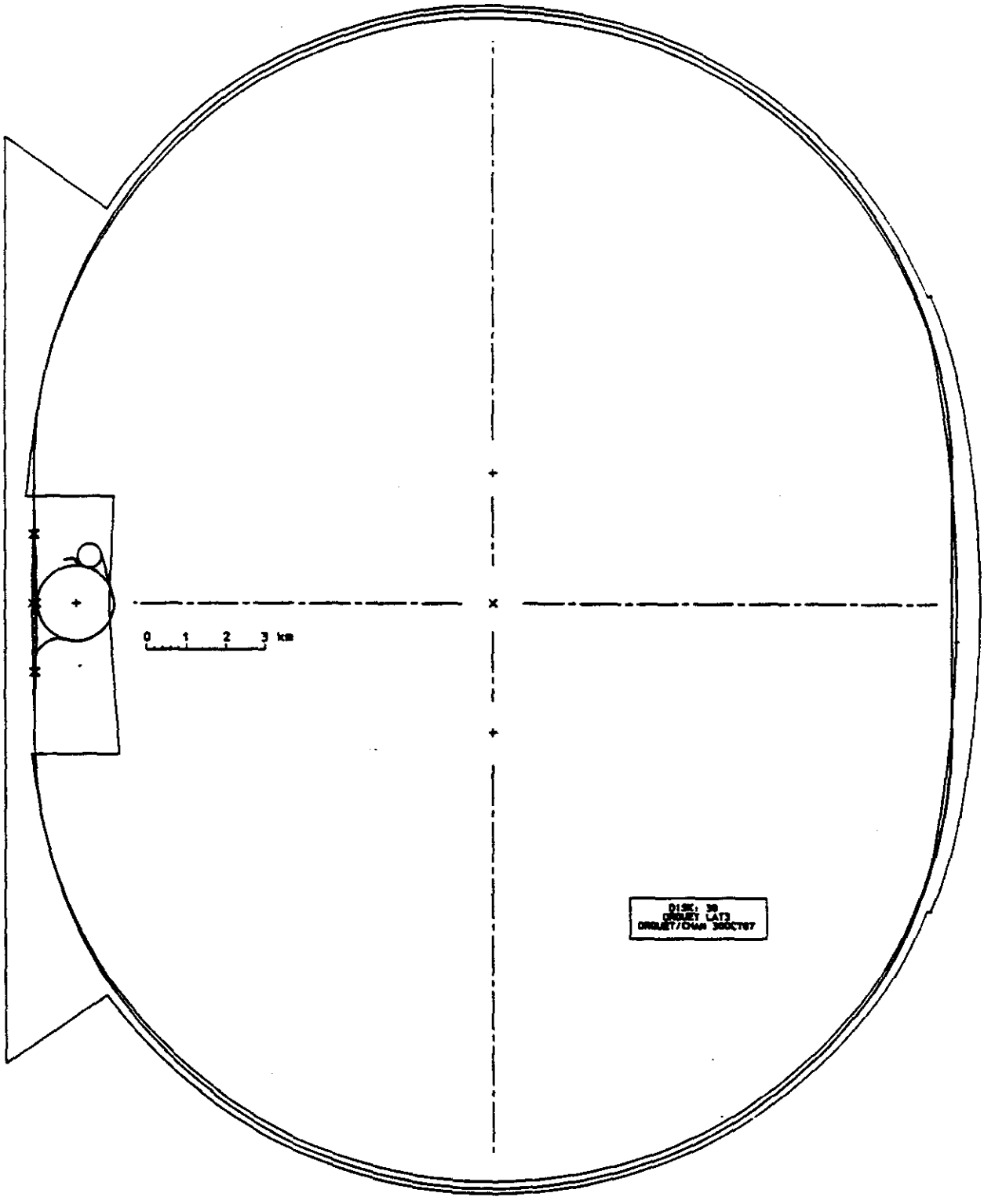

Figure 8.

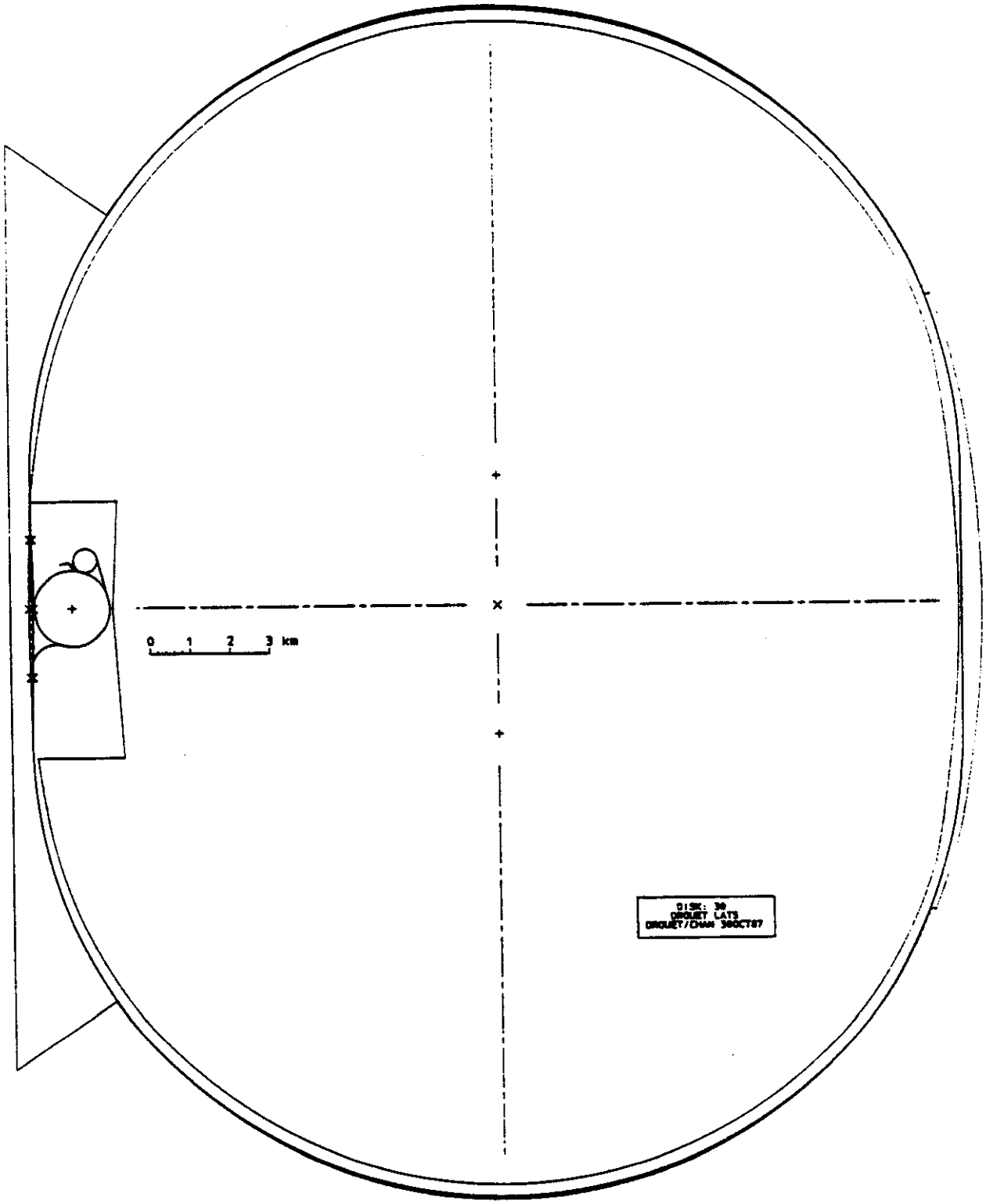

Figure 9.

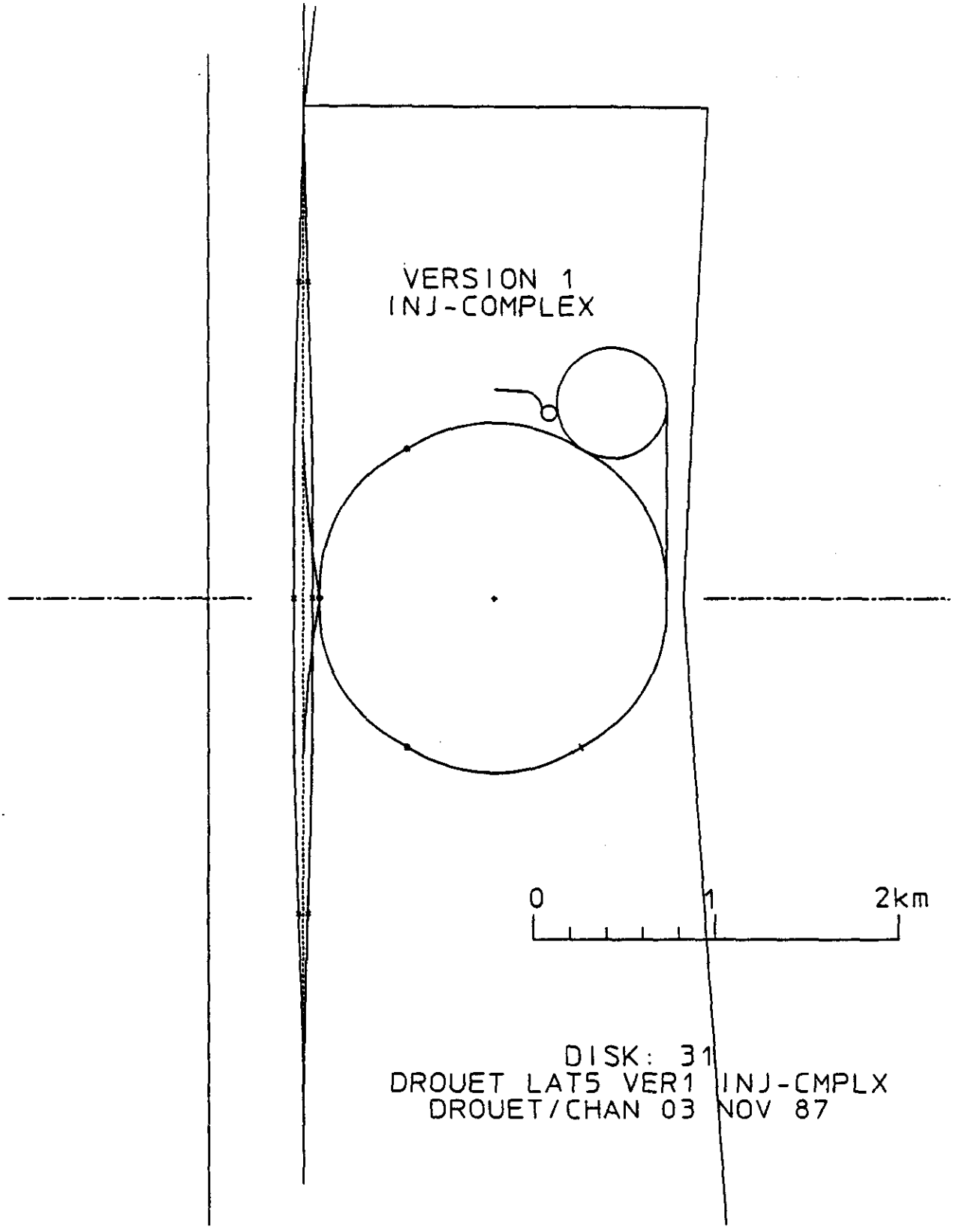
VERSION 1
INJ-COMPLEX
0
1
2km
DISK: 31
DROUET LAT5 VER1 INJ-CMPLX
DROUET/CHAN 03 NOV 87

Figure 10.

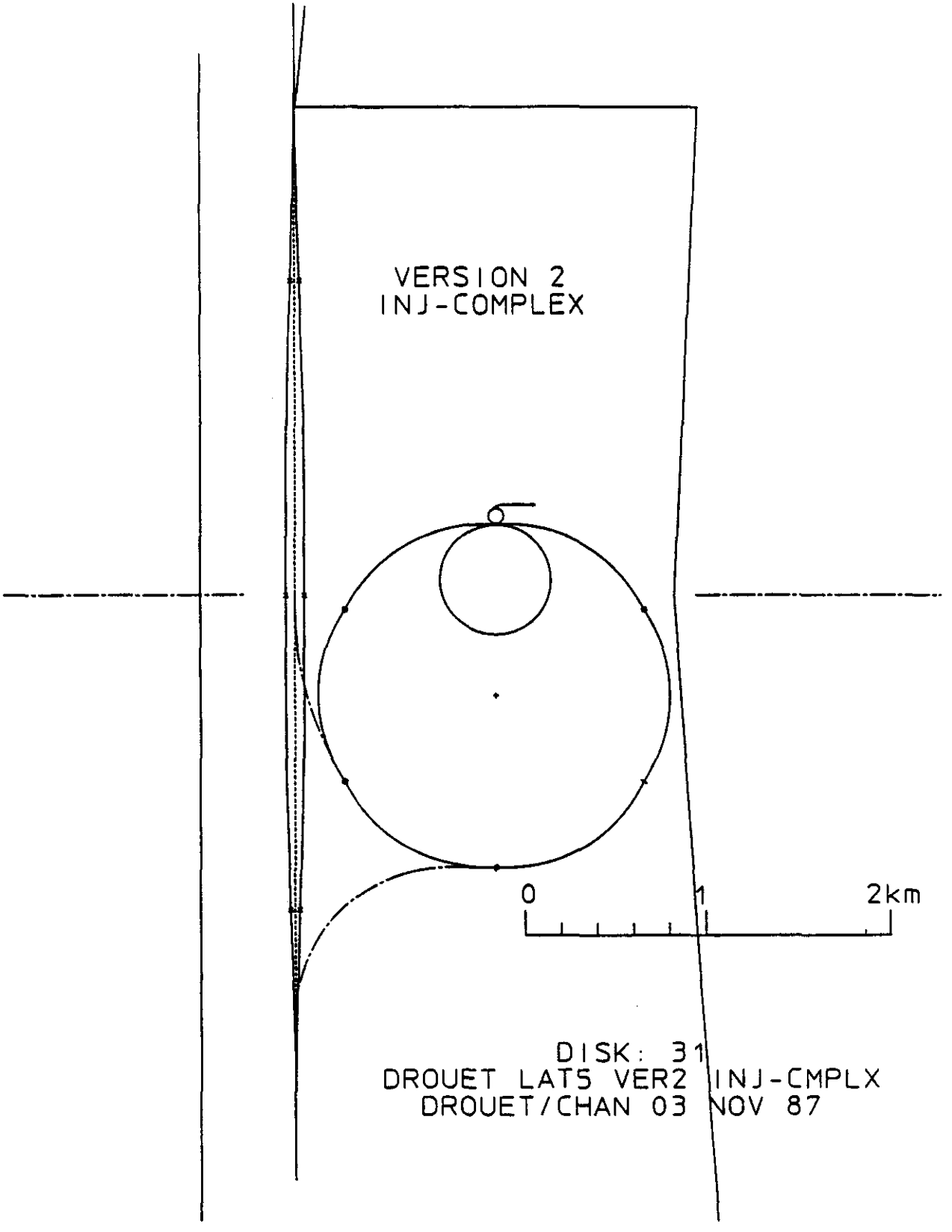
VERSION 2
INJ-COMPLEX
0
1
2km
DISK: 31
DROUET LAT5 VER2 INJ-CMPLX
DROUET/CHAN 03 NOV 87

Figure 11.

Figure 12.

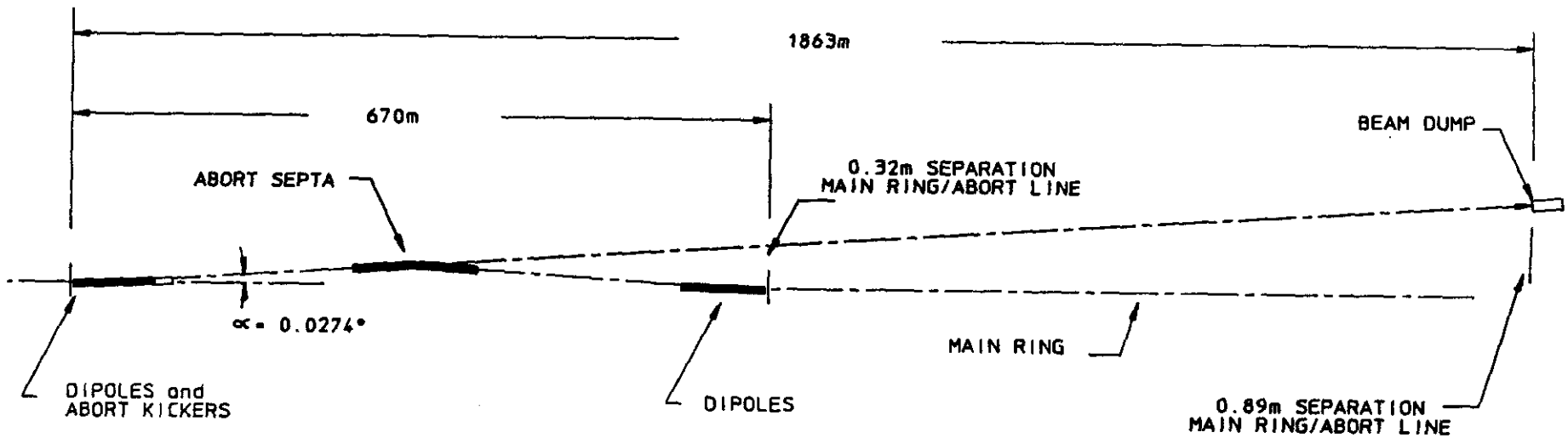

LAT3-13 NOV 87 GEOMETRY OF ABORT SEPTA - EXTERNAL BEAM LINE

DISK: 31
DROUET LAT3 ABORT SEPTA1
DROUET/CHAN 13 NOV 87

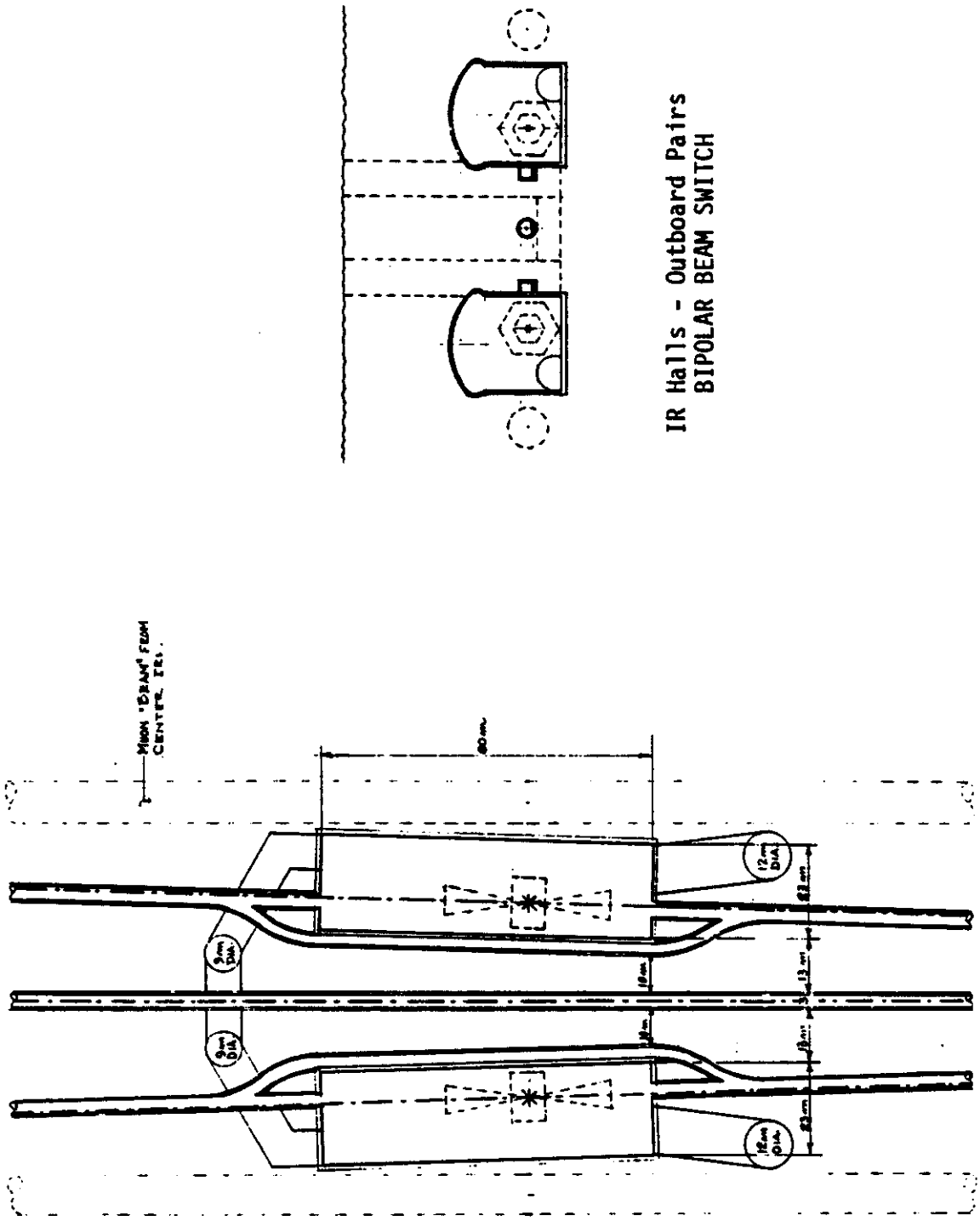

Figure 13.

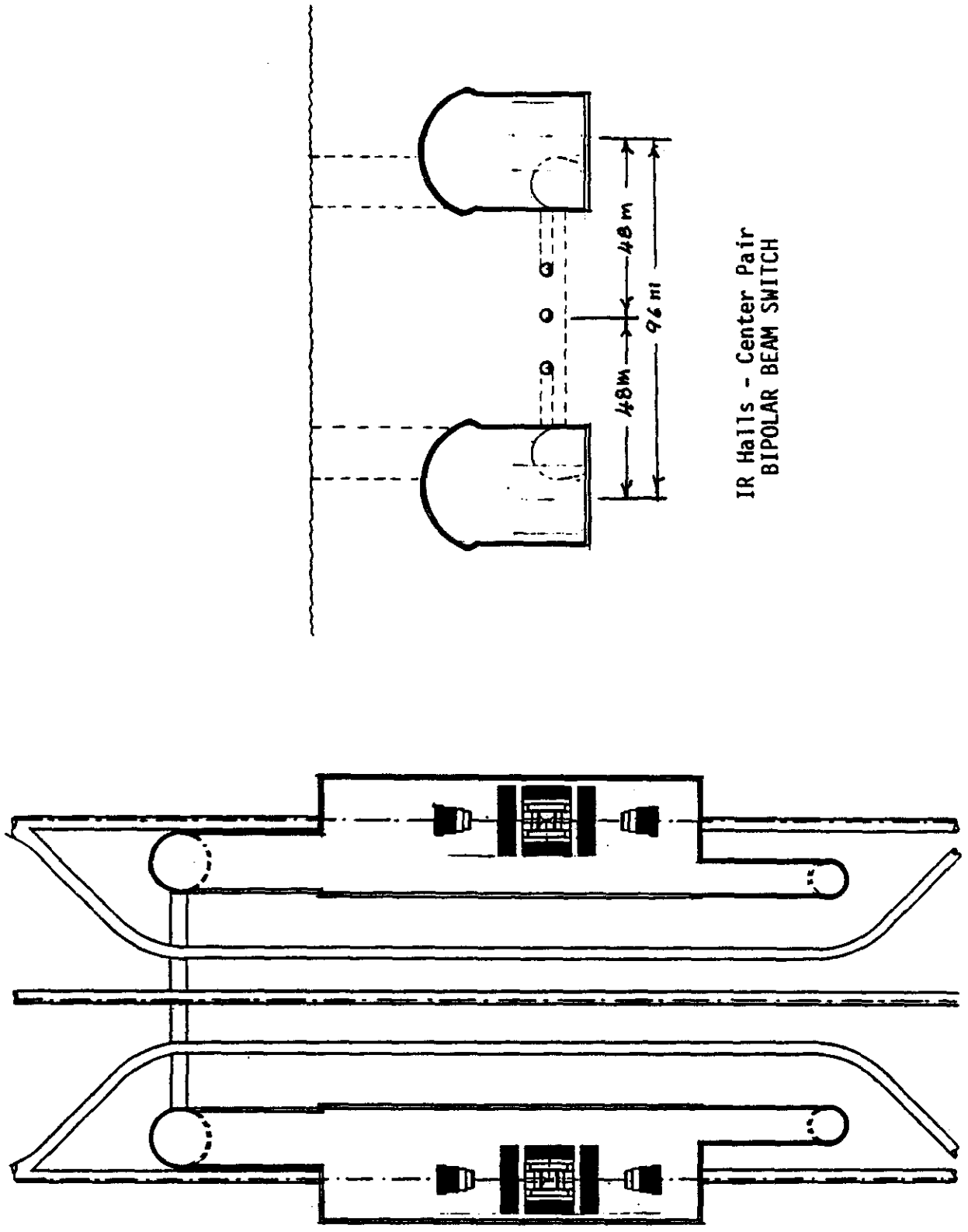

Figure 14.