The SSC Project Management Local Area Network

Paul Molinari
Real Time Systems Group
Lawrence Berkeley Laboratory
May 20, 1987

Introduction

A local area network (LAN) will provide the medium for connecting the computers that will be used to monitor the cost and track the schedule of construction for the SSC. This note describes the current implemented system and the plan for its expansion that will accommodate a total of one hundred microcomputers as the project moves into the main construction phase.

***

The cost and construction progress for the SSC will be tracked using the OPEN PLAN management software (see SSC-N-311 for details) running on a networked group of IBM PC-AT microcomputers. To provide access to the schedules and provide a means for the various divisions of the SSC staff to exchange data and electronic mail, a LAN was established. The system that is currently in use is a 3 COM Ethershare network which uses an enhanced IBM AT as the file server and print spooler and standard ethernet (IEEE 802.3) cabling and hardware. The server has one hundred megabytes of disk storage which is divided into virtual volumes that serve the different divisions of the CDG as an electronic bulletin board, a file exchange area, electronic mail service and as a spooler for a Hewlet Packard laserjet and X-Y plotter. Additionally, a Tecmar sixty megabyte tape unit is being used to perform weekly backups of the network server and the workstation PCs.

Choice of the Ethernet based Lan provides for ease of connectivity between the SSC's microcomputers and a smooth transition at a later time when integration to other computer systems and facilities is required. There are conditions defined for the Ethernet standard which will enable the SSC network to be configured in a variety of topologies (ie. buss, star and tree) and without exception allow growth well beyond their present or future needs. The standard parameters can be summarized as follows :

1. The transmission media is 50 ohm coax cable that provides a 10 Mbps broadcast channel.

2. Cable segments can be up to 500 meters in length and multiple segments may be linked using repeaters and bridges.

3. Connections to equipment (PCs or Servers) are made through 'vampire taps' which are 2.5 meters apart. 100 taps per segment are allowed.

4. Cable length from tap to PC can be up to 50 meters.

5. There is a maximum of 1500 meters and two bridges that can be between any two stations.

Configurations of the PC workstations centers on the IBM PC-AT with two megabytes of main memory (in most cases) and a thirty megabyte hard disk drive. Each machine has a Tecmar tape drive interface board in it to allow the tape drive to be connected during disk backup.

The present LAN has the capability to service up to forty-five PC stations. As system requirements approach saturation and/or as additional resources are needed, the current configuration is readily expandable. The planned upgrades include adding more disk storage, increased complexity of the network connections (due to the relocation of the CDG to the construction site) through the use of bridges and repeaters, dial-in modem service and finally by the addition of a second server.

References :

Ethershare Administrator's Guide, May 1986, 3Com Corporation, Mountain View, Ca.

Local Area Networks & Multiuser Databases, Rick Watkins, 1986, Micro Development, Inc.

Networks and Communications Buyer's Guide, 1987, Digital Equipment Corp.

The SSC LAN

Spring 1987 configuration

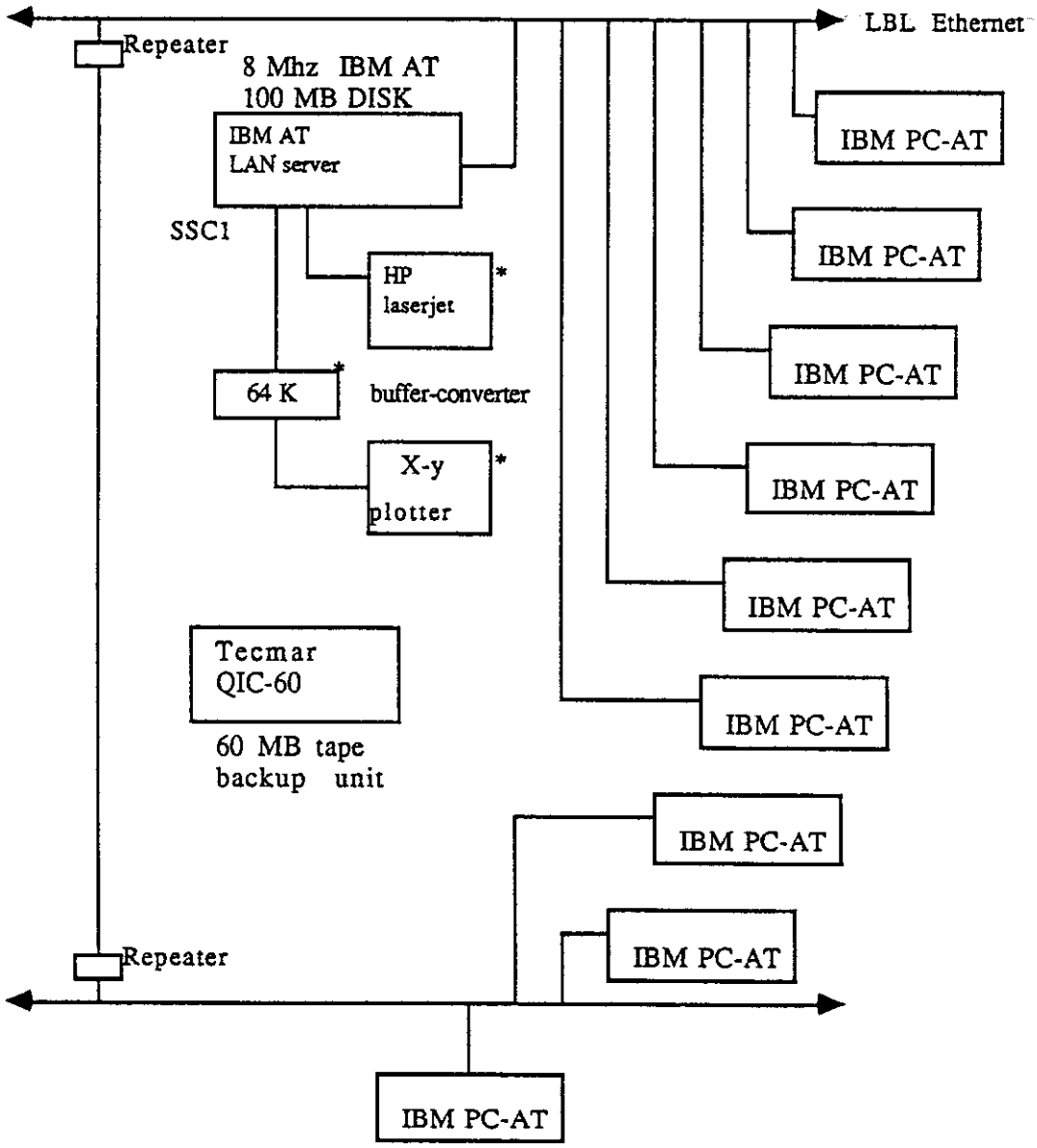

Equipment to be installed
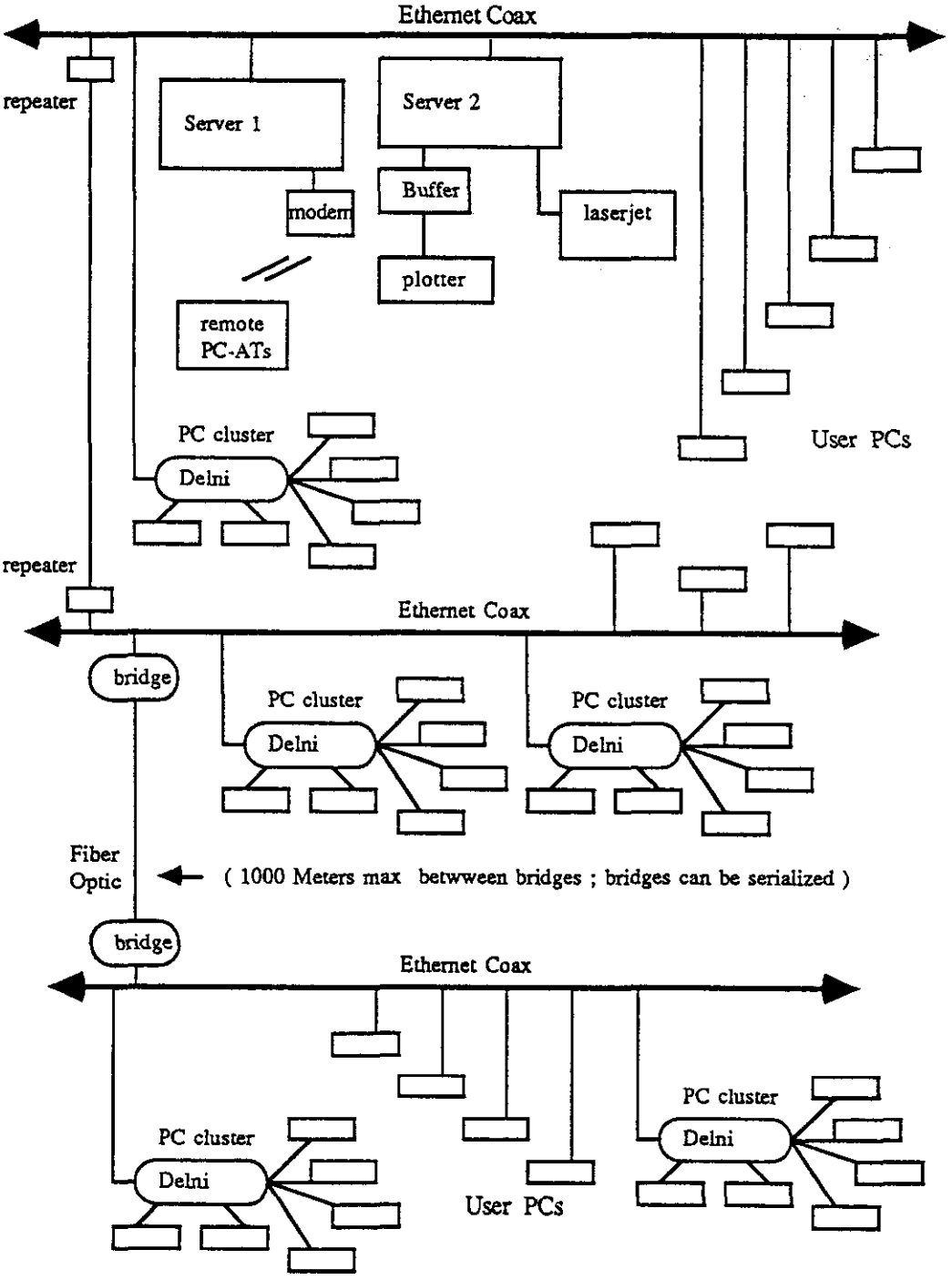
EXPANDED SSC LAN