Fermi National Accelerator Laboratory

FN-444
0302.000
(SSC-N-277)

Impedances of Beam Position Monitors

King-Yuen Ng

Fermi National Accelerator Laboratory
P.O. Box 500, Batavia, IL 60510 USA

December 1986

Operated by Universities Research Association Inc. under contract with the United States Department of Energy

FN-444
0302.000
(SSC-N-277)

December, 1986

IMPEDANCES OF BEAM POSITION MONITORS

King-Yuen Ng

Fermi National Accelerator Laboratory, Batavia, IL 60510*

CONTENTS

I. Introduction
II. The Cylindrical Stripline Monitors
III. Longitudinal Coupling Impedance
IV. Transverse Coupling Impedance
V. Application to the SSC
VI. Off-centered Beam and Impedances

*Operated by the Universities Research Association Inc., under contracts with the U. S. Department of Energy.

I INTRODUCTION

Beam position monitors are required to measure the horizontal and vertical positions of the beam so that it can be guided through the central region of a beam pipe of ~ 1.65 cm radius and circulate around the storage ring many many times. Since beam signals are registered at the terminations, the monitors must exhibit impedances to the beam.

The beam monitors that will be discussed here are cylindrical stripline pickups, primarily because the computations are usually much simpler than the rectangular geometry ones. However, in many cases, for example, the Fermilab main ring, the rectangular geometry is preferred over cylindrical. Hopefully, our cylindrical results below would provide at least a rough estimation for the rectangular counterpart.

II THE CYLINDRICAL STRIPLINE MONITORS

Consider a pair of cylindrical stripline pickups[1] exposed to a short beam bunch as shown in Fig. 1. Each stripline has a length ℓ and subtends an angle ϕ_0 to

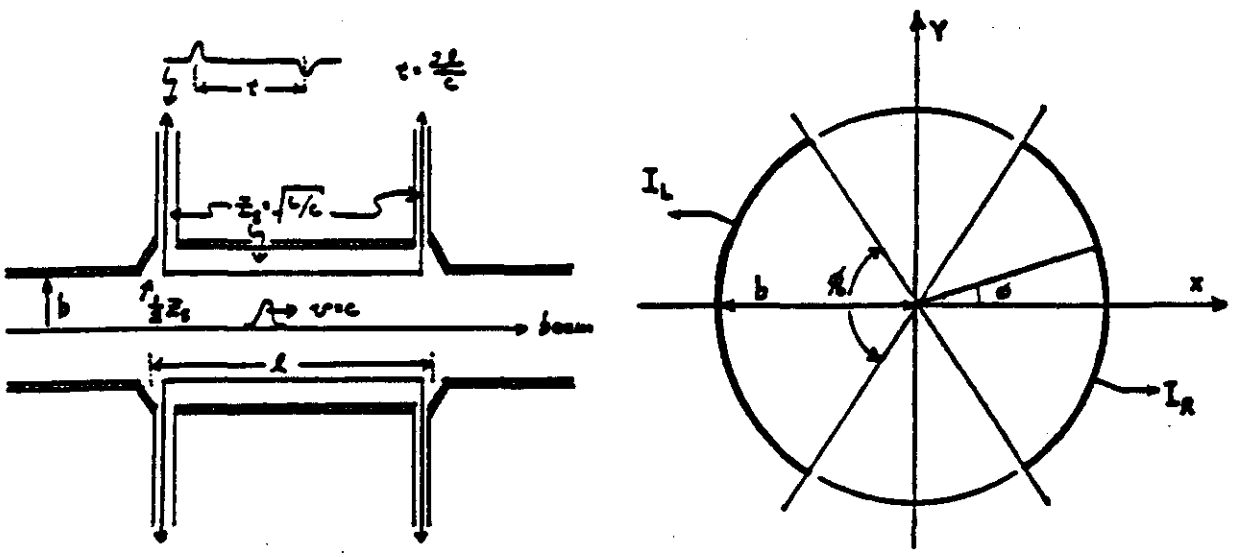

Figure 1: Geometry of the cylindrical striplines monitor.

the beam pipe axis. The stripline together with the extruded beam pipe behind it can be considered as a section of transmission line with a characteristic impedance $Z_s = \sqrt{L/C}$, where L and C are the inductance and capacitance per unit length. Any signal propagating along this section of transmission line will have a velocity $\beta_s c = 1/\sqrt{LC}$. Each end of the stripline is attached via a port to a transmission line

of the same characteristic impedance. Hence, any signal induced on the stripline will either propagate through one of the ports onto a transmission line without reflections. This is just equivalent to terminating each end of the stripline by a resistance of Z_s as in Fig. 2.

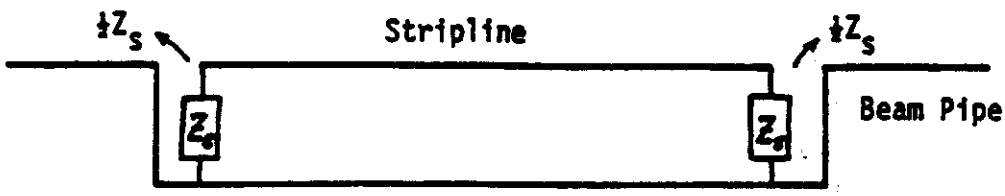

Figure 2: A stripline forming a transmission line with the beam pipe having characteristic impedance Z_s and terminated at both ends by Z_s.

When a bunch of time distribution $I(t)$ and velocity $\beta_p c$ traveling along the axis of the beam pipe crosses the first or upstream port, the image current on the walls of the pipe sees an impedance of $Z_s/2$, representing the parallel impedance of the upstream termination impedance Z_s and the transmission line formed by the stripline which, since terminated at the far end by Z_s, also has impedance Z_s. In other words, the image current splits into two equal parts, one traveling through the upstream termination and is detected while the other half along the stripline and ending up going through the downstream termination a time $\ell/\beta_s c$ later.

When the bunch beam passes through the downstream port the same thing happens but the polarity reverses. One half of the signal will travel through the downstream termination while the other half propagates up the stripline to be collected by the upstream termination. Thus, the voltage across the upstream termination is,

$$V_u(t) = \frac{Z_s}{2}\left(\frac{\phi_0}{2\pi}\right)\left[I(t) - I\left(t - \frac{\ell}{\beta_p c} - \frac{\ell}{\beta_s c}\right)\right], \tag{1}$$

and that across the down stream termination is,

$$V_d(t) = \frac{Z_s}{2}\left(\frac{\phi_0}{2\pi}\right)\left[I\left(t - \frac{\ell}{\beta_s c}\right) - I\left(t - \frac{\ell}{\beta_p c}\right)\right]. \tag{2}$$

The factor $\phi_0/2\pi$ comes about because only such a fraction of the image current will flow through a port.

The net signal seen at the upstream port is a bipolar doublet with each lobe having essentially the same time distribution as the beam bunch itself but are separated by a constant time of $(\ell/\beta_p c + \ell/\beta_s c)$. However, the signal at the downstream port will be completely cancelled if the beam velocity and the signal velocity are the same. This is in fact the situation, since the signal velocity in a transmission line with a free-space medium is exactly c and the beam particle velocity is also very close to c. For simplicity, we shall set $\beta_p = \beta_s = 1$ in below and forget the downstream port.

III LONGITUDINAL COUPLING IMPEDANCE

In the frequency domain, the beam has a current $I(t) = I_0 e^{j\omega t}$ at the upstream port. Note that I_0 is in general complex but is time independent. The voltage across the upstream port becomes

$$V_u(\omega) = \frac{Z_s}{2}\left(\frac{\phi_0}{2\pi}\right) I_0 \left(1 - e^{j2\omega\ell/c}\right). \tag{3}$$

This happens to be also the potential difference across the gap at the upstream end. The total image current in the walls of the beam pipe is of course $-I_0$. But only a fraction $\phi_0/2\pi$ will see this potential different while the rest just flow through without meeting any resistance. As a result, the *average* potential seen by the particle beam is

$$V_b(\omega) = \left(\frac{\phi_0}{2\pi}\right) V_u(\omega). \tag{4}$$

The longitudinal impedance for one strip plate is therefore $(Z_\parallel)_{BPM} = V_b(\omega)/I_0$, or

$$(Z_\parallel)_{BPM} = Z_s \left(\frac{\phi_0}{2\pi}\right)^2 \left(\sin^2\frac{\omega\ell}{c} + j\sin\frac{\omega\ell}{c}\cos\frac{\omega\ell}{c}\right). \tag{5}$$

The same impedance can be computed using Eq. (3) in another way. The average real power dissipated in the upstream termination is

$$P(\omega) = \frac{|V_u(\omega)|^2}{2Z_s}. \tag{6}$$

This is by definition equal to $\frac{1}{2}|I_0|^2\, \mathcal{R}e(Z_\parallel)_{BPM}$, which results in the same $\mathcal{R}e(Z_\parallel)_{BPM}$ as Eq. (5). The imaginary part can be obtained using Hilbert transformation and is left as an exercise for the reader. However, in this situation, $\mathcal{R}e\, Z_\parallel(\omega)$ does not vanish at infinity and we have to work with $\mathcal{R}e\, Z_\parallel(\omega)/\omega$ instead. In using Hilbert

transformation, one has to keep in mind that we may not be getting a unique result. This is because, a frequency independent real impedance needs not have an imaginary counterpart. Also the *ideal* inductance or capacitance which gives rise to $Im\, Z_\parallel = \omega L$ or $-1/\omega C$ needs not have a real counterpart. In other word, to the $Im\, Z_\parallel$ obtained from $Re\, Z_\parallel$ through Hilbert transform, we can add any *ideal* inductive or capacitive terms. On the other hand, to the $Re\, Z_\parallel$ obtained from $Im\, Z_\parallel$ through Hilbert transform, we can add any pure frequency independent resistive term.

Note that the longitudinal impedance starts out inductively at low frequencies and, after $\omega = \pi c/2\ell$, alternates between capacitive and inductive. However, there are no sharp resonances since the stripline is match-terminated at both ends.

There are some striplines, like those in the Fermilab main ring, that have one match-termination only at the center (see Fig. 3). The impedance seen at each end

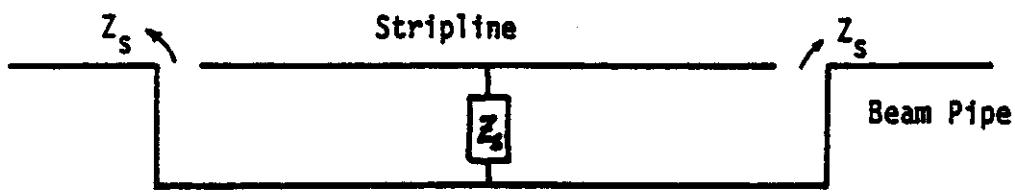

Figure 3: A stripline forming a transmission line with the beam pipe having characteristic impedance Z_s and is terminated at the center by Z_s.

is Z_s in parallel with an open transmission line of characteristic impedance of Z_s. At low frequencies, the impedance seen is therefore just Z_s and the currents from each end of the stripline will be absorbed totally without any reflection. If we keep the lowest reactive term, the impedance seen at either end of such a stripline is

$$Z_i = Z_s \left(1 - \frac{j\omega\ell}{2c}\right). \tag{7}$$

Here, we have set the particle velocity and the signal velocity along the stripline to be equal to c. The voltages V_u and V_d seen by the image current while crossing the upstream end and the downstream end are respectively,

$$V_u = Z_i \left(\frac{\phi_0}{2\pi}\right) I(t), \tag{8}$$

and

$$V_d = -Z_i \left(\frac{\phi_0}{2\pi}\right) I(t - \ell/c). \tag{9}$$

The *average* voltage seen by the beam is therefore

$$V = Z_i \left(\frac{\phi_0}{2\pi}\right)^2 [I(t) - I(t - \ell/c)]. \tag{10}$$

The extra factor of $(\phi_0/2\pi)$ comes in because of the same averaging process mentioned above. Putting in $I(t) = I_0 e^{j\omega t}$, we obtain the longitudinal impedance,

$$(Z_\parallel)_{BPM} = Z_s \left(\frac{\phi_0}{2\pi}\right)^2 \left(1 - \frac{j\omega\ell}{c}\right)\left(1 - e^{-j\omega\ell/c}\right) \tag{11}$$

for one stripline terminated at the center at low frequencies. At high frequencies, because the stripline can accept resonances with standing waves having a node at the middle where the termination does not absorb any power and the resonances will not be disturbed[2]. Resonances will occur whenever the wavelength is an integral number of $\ell/2$.

IV TRANSVERSE COUPLING IMPEDANCE

Let us turn to the problem of transverse coupling impedance. Assume a dipole current source separated by Δ; i. e., I at $x = \Delta/2$ and $-I$ at $x = -\Delta/2$. Here, we assume that the pair of cylindrical striplines are positioned horizontally as in Fig. 1. Note that both currents have the same t and z dependence such as $e^{j\omega(t - z/\beta c)}$ so that both are traveling in the same direction, or only the upstream termination will see a signal, (for striplines matched-terminated at both ends).

When a current I_0 deviates from the pipe axis by an amount $x_0 = \xi b$, the image surface current density at angle θ is

$$J(\theta; x_0) = -\frac{I_0}{2\pi b}\frac{1 - \xi^2}{1 + \xi^2 - 2\xi\cos\theta}. \tag{12}$$

This is obtained by the method of inversion by placing a current $-I_0$ at the point $x_1 = b^2/x_0$ as shown in Fig. 4. Then the beam pipe cylinder is an equipotential surface (using the analogy of a line charge). The image surface current density on the cylinder at angle θ can thus be computed directly from the two current sources at x_0 and x_1:

$$J(\theta; x_0) = \frac{I_0}{2\pi}\left(\frac{\cos\theta_0}{r_0} - \frac{\cos\theta_1}{r_1}\right), \tag{13}$$

where r_0 and r_1 are distances from the point of observation to the current and its image respectively. Using the fact that $r_1 = br_0/x_0$, Eq. (13) leads to Eq. (12).

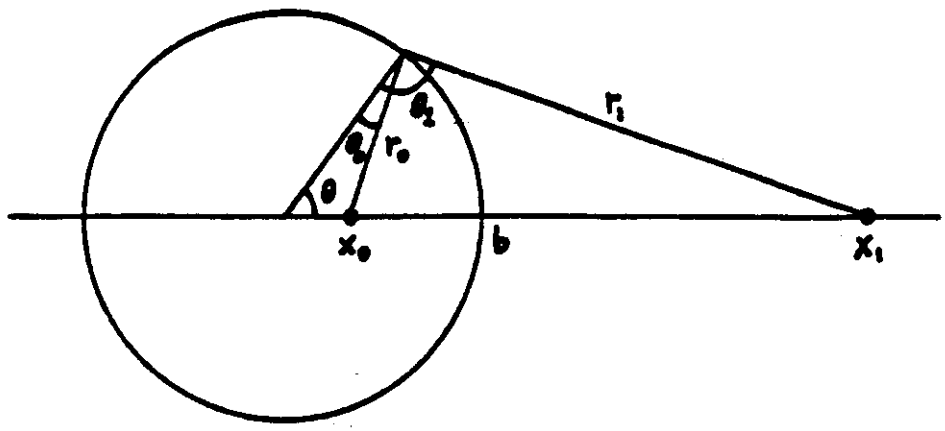

Figure 4: Computation of current density on cylinder by the method of inversion.

For our dipole current, the image wall current density can be obtained from Eq. (12) by differentiation with respect to x_0. Since we are interested only in the dipole term, $J(\theta; x_0)$ can be expanded to give

$$J(\theta; x_0) = -\frac{I_0 \Delta \cos\theta}{\pi b^2}. \tag{14}$$

The current flowing into the right stripline system is, therefore,

$$I_R = \int_{-\phi_0/2}^{\phi_0/2} -\frac{I_0 \Delta \cos\theta}{\pi b^2} b d\theta, \tag{15}$$

and the current flowing into the left stripline system is,

$$I_L = -I_R. \tag{16}$$

Using Eq. (3), the voltages at the right and left upstream gaps are, respectively,

$$V_R = Z_s \frac{I_0 \Delta}{\pi b} \sin\frac{\phi_0}{2} \left(1 - e^{j2\omega t/c}\right),$$

$$V_L = -V_R. \tag{17}$$

The total average power dissipated is

$$P = \frac{1}{2Z_s}(|V_L|^2 + |V_R|^2), \tag{18}$$

or

$$P = 4Z_s \left(\frac{|I_0|\Delta}{\pi b}\right)^2 \sin^2\frac{\phi_0}{2}\sin^2\frac{\omega\ell}{c}. \tag{19}$$

There is a relation between the power dissipated and the real part of the transverse impedance derived by Nassibian and Sacherer[3] which we are going to repeat here. For a length ℓ of current loop, the interaction with the beam detector will give a magnetic field B_y through the loop so a back emf will be induced. Equivalently, the current in the loop will see an impedance Z given by

$$j\omega B_y \ell\Delta = ZI_0. \tag{20}$$

Substituting into the definition of $Z_\perp$,

$$Z_\perp(\omega) = \frac{1}{jI_0\Delta\beta_p}\int_0^L dz[(\mathbf{E} + (\mathbf{v}_p \times \mathbf{B})]_\perp, \tag{21}$$

$v_p = \beta_p c$ being the particle velocity, gives a horizontal transverse impedance,

$$Z_\perp = \frac{cZ}{\omega\Delta^2}. \tag{22}$$

The power dissipated is $P = \frac{1}{2}|I_0|^2\, \mathcal{R}e\, Z$ and we therefore get

$$P = \frac{1}{2}\frac{\omega}{c}(I_0\Delta)^2\, \mathcal{R}e\, Z_\perp. \tag{23}$$

Thus, for a pair of striplines

$$\mathcal{R}e(Z_\perp)_{BPM} = \frac{8Z_s}{\pi^2 b^2}\frac{c}{\omega}\sin^2\frac{\phi_0}{2}\sin^2\frac{\omega\ell}{c}, \tag{24}$$

which has exactly the same frequency dependence as $\mathcal{R}e(Z_\parallel)_{BPM}/\omega$. The imaginary part can be found by Hilbert transform; it should have exactly the same frequency dependence as $Im(Z_\parallel)_{BPM}/\omega$. Therefore, for a pair of striplines

$$(Z_\perp)_{BPM} = \frac{c}{b^2}\left(\frac{4}{\phi_0}\right)^2 \sin^2\frac{\phi_0}{2}\frac{(Z_\parallel)_{BPM}}{\omega} \qquad \perp \text{ to striplines} \tag{25}$$

or the x-direction here. In above, $(Z_\parallel)_{BPM}$ is the longitudinal coupling impedance of also a pair of *two* striplines.

To compute the transverse impedance in the y-direction, we put the currents I at $y = \Delta/2$ and $-I$ at $y = -\Delta/2$ instead. Then the current flowing into the right stripline system is

$$I_R = \int_{-\phi_0/2}^{\phi_0/2} -\frac{I_0\Delta\cos(\frac{\pi}{2}+\theta)}{2\pi b^2} b d\theta, \tag{26}$$

which is identically zero and so is also I_L. The voltages across each upstream gap are therefore also zero. Thus,

$$(Z_\perp)_{BPM} = 0 \qquad \parallel \text{ to striplines} \tag{27}$$

or the y-direction here. The reason is clear, because $(Z_\perp)_{BPM}$ depends on the voltages across the striplines gap which, in turn, depend only on the *total* currents flowing across each gap but not on the actual distribution of the current density. However, a current dipole at $y = \pm\Delta/2$ will only produce image current distribution that is antisymmetric with respect to the x-axis while the *total* currents crossing each gap are zero.

V APPLICATION TO THE SSC

In the SSC, the most demanding requirements for the beam position monitors is in the commissioning stage where very low beam currents must be used in order not to quench the magnets. It appears that both coordinates must be measured at every quadrupole (one per half cell); so the pickups must be a 4-electrode design shown in Fig. 5. We take[4] $\phi_0 = 55°$, $\ell = 10$ cm, and $Z_s = 50$ ohms. The pipe radius is $b = 1.65$ cm. At low frequencies, $\omega/2\pi \ll c/4\ell = 750$ MHz, the longitudinal impedance per harmonic per monitor (*four* striplines) is

$$\left(\frac{Z_\parallel}{n}\right)_{BPM} = jZ_s\left(\frac{\phi_0}{\pi}\right)^2\frac{\ell}{R} = 3.53\times10^{-5}\ \Omega, \tag{28}$$

while the transverse impedance is (only *two* striplines are contributing, either in the x-direction or the y-direction),

$$(Z_\perp)_{BPM} = j\frac{8Z_s\ell}{\pi^2 b^2}\sin^2\frac{\phi_0}{2} = 3.17\ \text{k}\Omega/\text{m}. \tag{29}$$

With almost 900 sets of monitors in each ring, the impedances are $(Z_\parallel/n)_{BPM} \sim j0.0318\ \Omega$ and $(Z_\perp)_{BPM} \sim j2.86\ \text{M}\Omega/\text{m}$ for either the horizontal or vertical direction.

VI OFF-CENTERED BEAM AND IMPEDANCES

We can also compute the longitudinal impedance of a beam passing through a pair of striplines shown in Fig. 1 but deviated from the central axis by x_0 horizontally

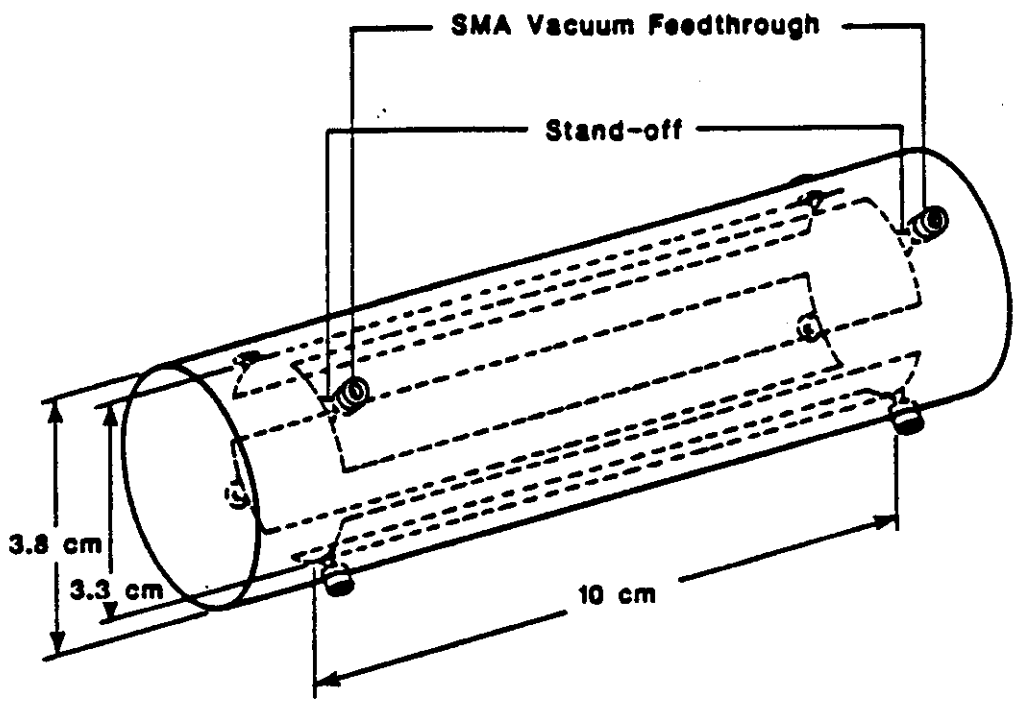

Figure 5: The 4-electrode stripline monitor of the SSC.

and y_0 vertically. Using Eq. (12), the total image currents flowing across the right and left upstream gaps are:

$$I_{R,L} = -I_0 \left(\frac{\phi_0}{2\pi}\right) \left[1 \pm \frac{4x_0}{b}\frac{\sin(\phi_0/2)}{\phi_0} + \frac{2(x_0^2 - y_0^2)}{b^2}\sin\phi_0\right]. \tag{30}$$

Note that the second term is the dipole term and we have included a third term that is of a higher multipole. In the present situation, it is not so simple to compute the *average* voltage seen by the particle beam because the beam has been displaced and the distribution of the image current is no longer uniform. As a result, we will compute the power dissipated at the upstream terminations and infer the real part of the longitudinal impedance. This power is proportional to the sum of $|I_R|^2$ and $|I_L|^2$ and is given by

$$P_{disp} = 2G(x_0, y_0)P, \tag{31}$$

where P is the power dissipated through *one* stripline when the beam is at the central axis of the beam pipe as given by Eq. (6), and the function

$$G(x_0, y_0) = 1 + \left(\frac{x_0}{b}\right)^2 \left(\frac{4}{\phi_0}\right)^2 \sin^2\frac{\phi_0}{2} + \left(\frac{x_0^2 - y_0^2}{b^2}\right)\left(\frac{4}{\phi_0}\right)\sin\phi_0 \tag{32}$$

takes care of the fact the the beam is displaced. The longitudinal impedance of a pair of striplines is therefore equal to $G(x_0, y_0)$ times the impedance of an undisplaced beam. Note that the second term of $G(x_0, y_0)$ comes from the square of the dipole term while the third term is from the higher multipole. Here, the term linear in x_0 or the linear dipole term cancels out. This is in fact exactly what we expect. In order to measure the deviation of the beam from the central axis, one should measure the difference between the left and right terminations but not the sum; then, the linear dipole term will emerge.

The longitudinal coupling impedance of a displaced beam provides a way to compute the transverse coupling impedances[3]. This method is very useful; so we will derive it here. Let us concentrate on displacement in the x-direction only. We write $E_z(x, x_0)$ as the image electric field at x due to a current I_0 at x_0. For a length ℓ, define

$$Z_\parallel(x, x_0) = \frac{\ell E_z(x, x_0)}{I_0}, \tag{33}$$

which is a measurable quantity and reduces to the usual longitudinal impedance $Z_\parallel(x_0)$ at x_0 in the limit $x \to x_0$.

The image electric field at x due to a dipole current at x_0 separated by Δ is

$$E_z' = \frac{\partial E_z(x, x_0)}{\partial x_0}\Delta, \tag{34}$$

and the magnetic field at x perpendicular to the plane of the dipole is, by Faraday's law,

$$B'_y = \frac{\Delta}{j\omega} \frac{\partial^2 E_z(x, x_0)}{\partial x \partial x_0}. \tag{35}$$

Substituting into the definition of $Z_\perp$ in Eq. (21), the horizontal transverse impedance displaced by x_0 is

$$Z_\perp = \frac{c}{\omega} \left. \frac{\partial^2 Z_\parallel(x, x_0)}{\partial x \partial x_0} \right|_{x=x_0}. \tag{36}$$

The vertical transverse impedance can be inferred similarly.

In many cases, the longitudinal impedance at (x_0, y_0) has the form

$$Z_\parallel(x_0, y_0) = [1 + F_x^2(x_0) + F_y^2(y_0)] \left. Z_\parallel \right|_{x_0=0, y_0=0}; \tag{37}$$

so $Z_\perp$ can be obtained directly from the position dependence of $Z_\parallel$. For example, the horizontal transverse impedance is

$$Z_\perp = \frac{c}{\omega} \left(\frac{dF_x}{dx_0} \right)^2 \left. Z_\parallel \right|_{x_0=0, y_0=0}. \tag{38}$$

However, one should be careful that only dipole contributions should be included into F_x and F_y since the dipole impedances cannot receive contributions from other multipoles. In our situation, the square bracketed term in Eq. (38) is just the function $G(x_0, y_0)$ in Eq. (32) but with the higher multipole term removed (keeping only the second term). Then, substitution into Eq. (37) will lead to exactly the same transverse impedances we obtained earlier in Eqs. (25) and (27). For striplines terminated at the center, the off-centered factor $G(x_0, y_0)$ is the same. Therefore, the transverse impedances can also be obtained through Eq. (38).

In Ref. [1], the third or higer multipole term of $G(x_0, y_0)$ has been included when the differentiation with respect to x_0 or y_0 is carried out. As a result, both the horizontal and transverse impedances quoted there are not correct. In particular, for positive frequencies, the real part of the vertical transverse impedance quoted is negative which is not possible. The transverse impedance is related to and has the same sign as the longitudinal impedance of the dipole mode when ω is positive[5]. The longitudinal impedance for each multipole must be positive because it is responsible for the power dissipation of a beam particle in that multipole mode.

References

[1] R. Shafer, in *Report of the SSC Impedance Workshop*, Lawrence Berkeley Laboratory, Berkeley, June 1985, ed. J. Bisognano, SSC Central Design Group Internal Report No. SSC-SR-1017.

[2] K. Y. Ng, in *Principles of High Energy Hadron Colliders, Part II: the Tevatron*, ed. H. Edwards and M. Month.

[3] G. Nassibian and F. Sacherer, Nucl. Instr. and Meth. **159**, 21 (1979).

[4] In *Superconducting Super Collider Conceptual Design*, ed. J. D. Jackson, September 1986, SSC Internal Report No. SSC-SR-2020, Section 5.12.2.

[5] A. W. Chao, in *Second Summer School on High Energy Particle Accelerators*, Stanford Linear Accelerator Center, Stanford, August 1982, ed. M. Month.