High Energy Facilities
Accelerator Development Branch
BROOKHAVEN NATIONAL LABORATORY
Associated Universities, Inc.
Upton, New York 11973

SSC Technical Note No. 45
(SSC-N-157)

Collars for the Design "D" SSC Dipole: A Design Review

Robert J. LeRoy

March 1, 1986

ABSTRACT

The purpose of this report is to summarize the design of the collars, their use in the magnet, and the analysis done on the collars. This report revises and updates previous SSC Technical Note No. 32 of the same title. Covered are the considerations and analysis that went into the design of the collars. The collar loads are described which include the Lorentz forces at 6.5 T along with the necessary prestress to resist those forces. Outlined are the three basic considerations that determined the final design of the collars: collar deflections, collar stresses, and the magnetic losses due to the width of the collars. The finite element analysis used to predict the collar deflections and stresses is briefly reviewed. Material specifications and mechanical properties are presented on the stainless steel required for the collars. Measured results of collared deflections from both BNL and Lawrence Berkeley Laboratory (LBL) are given and compared to the predicted values. These results show that the actual room temperature deflections of the collars when keyed exceed those predicted. However, the collar deflections as measured by LBL when energized agree quite well with predicted values. Also, measurements taken of collars from the first 4.5 m magnet after disassembly indicate that the collars had yielded due to the loading in the press during keying. Assembly experiences from the first 4.5 m magnets assembled at BNL are outlined along with a discussion on the rentention of coil prestress after collar keying. Three areas of coil stress losses are identified and discussed: losses after pressing, coil relaxation, and losses due to cooldown. Finally, there is a discussion on what further work regarding the collars is being done or needs to be done.

INTRODUCTION

The Design "D" SSC dipole is a 4 cm bore, 6.5 T cold iron superconducting magnet with collared coils. The function of the collars is to provide the necessary prestress to the coils to counteract the Lorentz forces generated for an operating central field of 6.5 Tesla. This paper will discuss how the collar design was arrived at and how well the actual collars achieve this design.

The design of the collars must take into account: the stresses developed in the collar under load, the resulting deflections, and the loss

of field due to the removing of iron next to the coils. The collars also serve to position the coils within the iron yoke. The variable design parameters are collar cross sectional width, keying slots, and material selection. A cross section of the magnet assembly in Fig. 1 shows the 15 mm wide Design "D" collar with two 3/16" key slots. The collars are stamped from high strength stainless steel (60 ksi min. yield strength). The shape of the collars is similar to the Fermilab Saver collars. Fabrication and assembly of the collar packs are also similar except there is no welding involved. Pins and keys are used instead.

COLLAR LOADS

The load that the collars must carry is dependent on the coil prestress necessary at 4° K to prevent the coils from pulling away from the poles when energized. The room temperature assembly prestress, which is greater than the 4° K prestress, is determined by taking into account coil stress losses due to differences in thermal contraction between collar and coil, and coil relaxation effects over time.

The 4° K prestress is determined by first calculating the Lorentz force per conductor turn for a central field of 6.5 T.[1] The plot in Fig. 2 shows the circumferential and azimuthal components of the Lorentz forces per turn per linear inch. Next, a model of the coil is developed to calculate the force necessary to prevent coil motion at the pole along with the associated motions in the rest of the coil. The model below is of the inner coil. A similar model was also made for the outer coil.

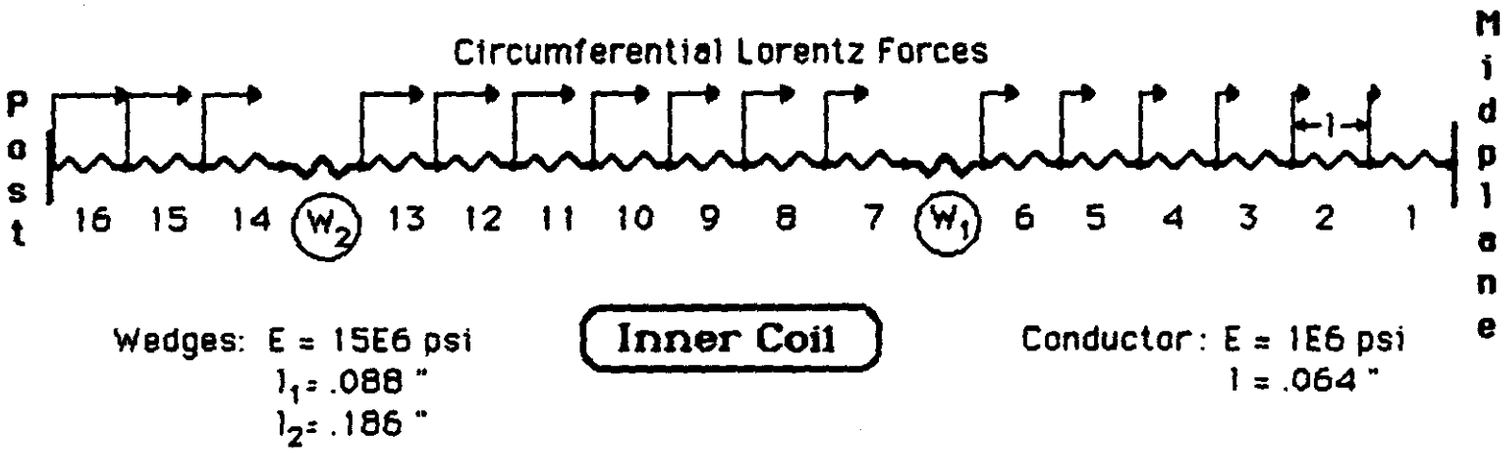

This model is input into a finite element program using spar elements with the appropriate circumferential component of the Lorentz force applied at the nodes. To calculate the minimum coil prestress required, the pole and midplane are constrained. The resulting reaction force at the pole is the minimum force necessary to prevent coil motion at the pole. Different values of prestress are input by removing the constraint at the pole and applying an initial strain to each element corresponding to the prestress desired. Figure 3 shows plots of coil deflections, ignoring friction effects, for: zero prestress, one half prestress and full prestress. Assumed for deflection calculations in this figure is a conductor modulus of 1E6 psi. Measurements indicate this to be a conservative estimate of modulus at 4° K thereby giving a higher estimate of coil motion. Required prestress is independent of elastic modulus.

Minimum Coil Prestress Required
at 4 K and 6.5 T

Inner Coil	3650 psi
Outer Coil	2940 psi

The thermal loss of prestress in the coils is a function of the difference in thermal contraction between the coils and collars, and the change in the modulus of elasticity of the coils from 293° K to 4° K. Measurements of cured coil stacks compressed under the same load that is seen in assembly indicate the transverse (circumferential) thermal contraction of the coils to be about 0.75 mils per inch greater than the stainless steel. The thermal contraction of the coils in the longitudinal direction matches that of stainless steel. Measurements of the elastic modulus of coil stacks at 77° K indicate an increase in the modulus of about 0.5E6 psi from an average room temperature modulus of 1.5-2.0E6 psi. Preliminary calculations predict thermal coil stress losses not to exceed 1500 psi.[2]

The other source of prestress loss is stress relaxation. The time between coil collaring, and when the magnets are installed in the ring and cooled down, could be as long as several years. The coils must have sufficient prestress remaining at the end of this period. Strain gage measurements of collared coils under load show that the loss of prestress over several days due to stress relaxation at room temperature is about 15%. Experiments with CBA and 3.2 cm bore SSC coils clamped in iron over time periods of months at room temperature show stress losses of about 25%.[3]

With the above information the minimum amount of prestress necessary at assembly to fully restrain the coils from releasing at the posts at 4° K and 6.5 T can be determined. By adding the calculated thermal loss, 1500 psi, to the calculated minimum prestress requirement, and multiplying by 1.33 to allow for a 25% loss from long term stress relaxation at room temperature, an assembly prestress value is arrived at. It needs to be noted that these are preliminary estimates only, since further calculations and verification of prestress losses due to thermal contraction and relaxation need to be done.

Estimated Assembly Prestress Requirements

Inner Coil	6870 psi
Outer Coil	5900 psi

COLLAR ANALYSIS - DEFLECTIONS AND STRESSES

Analysis of the collars was accomplished using the finite element code ANSYS. The purpose of the analysis was to determine, for different collar widths, the deflections and stresses of the collars under different loads. Initial models considered left-right symmetry along the vertical plane and constraints on the collar tab to simulate the collars locked together. Results from this model were used to design the collars. Calculations and measurements made later proved this model inadequate in being able to predict actual collar deflections. However, the model appears adequate in comparing relative deflections between different designs and load cases. Later models considered the entire collar with appropriate constraint equations to simulate the pins which transfer the forces from one collar to the other. The coils were modeled as sections of isotropic cylinders. Conductor angles, friction, and the presence of wedges were not taken into account. The circumferential prestress and the Lorentz forces are applied to the coil sections which in turn load the collars. The modulus of elasticity of the coils was taken as 1.5E6 psi. Figure 4 shows the finite element model of the collared-coil cross section.

Two basic load conditions were analyzed. The first considered the keyed collars under a prestress load only. This model was loaded with a compressive stress applied on the coil midplane of 9 ksi on the inner coils and 6.5 ksi on the outer coils. These are likely values of prestress that would be reached in assembly. The second load case imposed the 6.5 T Lorentz forces along the coils with the same preload applied at the midplane. The prestress at 4° K will actually be less than the prestress at room temperature. Zero vertical displacement is allowed in the key slots. The horizontal displacement of the tab is constrained to act symmetrically with the opposite side of the collar. This simulates the engagement of the tab with another collar. Initial analysis considered both 15 and 30 mm wide collars in both aluminum and stainless steel. The use of single or dual keys was also considered.

Results from the analysis indicated that a dual key design was preferable. Dual keys kept peak stresses down and made for a stiffer collar. Deflection results showed that a 30 mm aluminum collar with 30% less prestress load at room temperature was roughly equivalent to a 15 mm stainless collar. The lower room temperature prestress load in the aluminum collars is due to the greater thermal contraction of aluminum compared to stainless steel. At room temperature prestress, the collars are predicted to deflect more vertically than horizontally. However, when energized at 4° K, the collars are forced out along the horizontal axis. A summary of the calculated deflections in the 15 mm stainless collars for both room temperature loading and Lorentz loading is shown below. (Deflections in mils.)

Calculated Collar Deflections - 15 mm S.S.

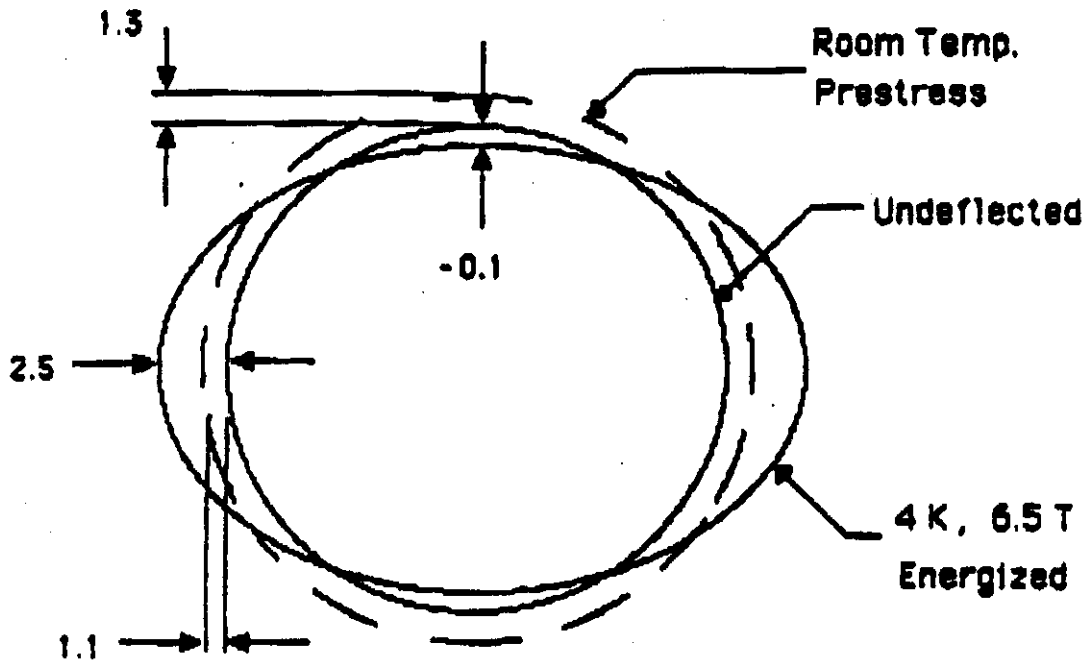

The stresses in the collar were examined at both room temperature loading and Lorentz loading. Because the yield strength of the stainless steel is well above 150 ksi at 4° K, and the coil stresses are less after cooldown, the worst case with regard to stress is at room temperature. With the prestress loading in the inner coil at 12 ksi and the outer coil at 9 ksi, the maximum von Mises' yield stress after the collars are keyed is about 58 ksi at the key slot as shown in Fig. 5. The actual yield strength of the material is about 15% higher. With 9 and 6.5 ksi on the inner and outer coils respectively and the Lorentz forces superimposed on the coils, the maximum von Mises' yield stress is 42 ksi as shown in Fig. 6. The collars are designed to operate in the elastic range so that no permanent deformation occurs. Therefore, there is no variation in conductor placement between thermal cycles.

MAGNETIC CONSIDERATIONS

After the deflections and stresses in the collar are calculated the last consideration for collar selection is the effect it has on the central magnetic field. With respect to the magnitude of the field, the more iron removed, the greater the requirements made on the superconductor to achieve a given field. The plot below reflects the decreased contribution of the iron to the central field which must be made up by increased performance of the superconductor. The current density J_c, referred to 4.2^{o} K and 5 T, is that which is required in the superconductor for a central field of 6.5 T.[4] The plot shows that J_c must be 200 A/mm^2 higher for a 30 mm collar than for a 15 mm collar in order to achieve the same central field of 6.5 T.

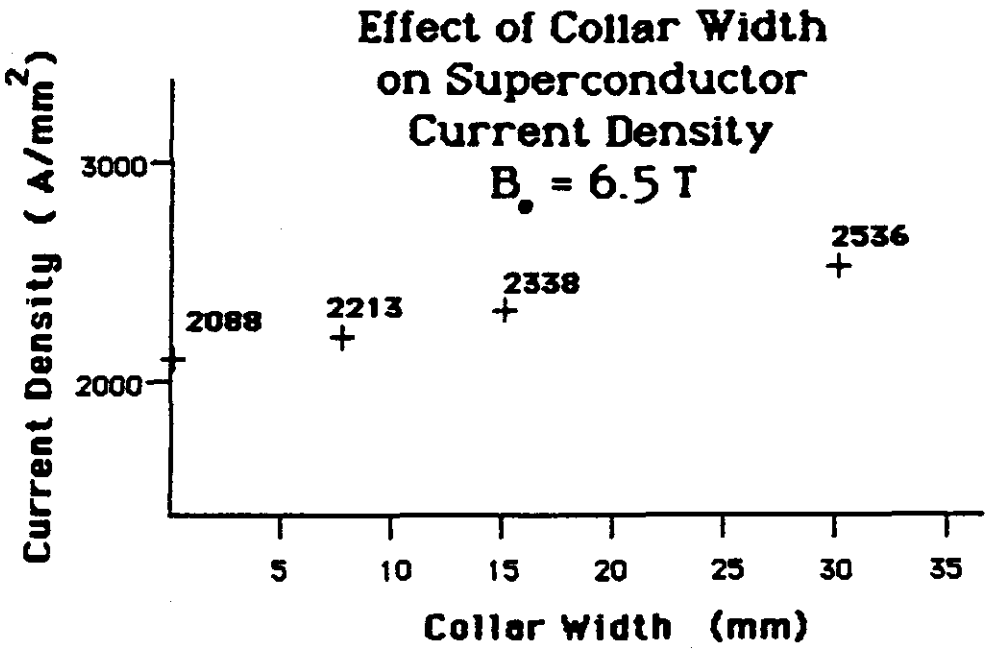

COLLAR DESIGN

The initial calculated deflections indicate that the relative radial motion between the prestressed and the energized condition, for both the 15 mm stainless steel and the 30 mm aluminum collars, was less than 2 mils. Greater than 2 mil deflections were considered to be excessive for both field quality requirements and coil motion with respect to quenches. Therefore, to minimize the field loss, a 15 mm collar was chosen (see Fig. 7). Reference BNL drawing number 22-223.02-4 for details.

The collar is stamped out of 16 ga. (.059" nom.) stainless steel. The two key slots are positioned and sized so that when the collars are bottomed out at the tabs, the coils are over compressed by 2 mils and a .1865" key has 2 mils of clearance for insertion. The holes allow for a nominal one mil diametric running clearance for the pins which transfer the force between alternating collars. Symmetry is very important in the collar design. Symmetry insures ease of assembly and proper alignment of the collars as they are stacked up. The position of the holes and the location of the collar tab is symmetric with respect to the vertical center line within .001". Without this requirement the collars would not properly lock together and the deflections would increase. The external key tabs on the

collar register the collared coil assembly in the yoke to an angular tolerance of ±0.5 milliradians. The key slot on the inner coil post is to provide for keying of the bore tube to the collared coil assembly.

The diameters of the collar and yoke are dimensioned so that the collars do not bear against the yoke and are therefore self-supporting. The overall assembly is assumed to act thermally as stainless steel which contracts about 3 mils per inch. Therefore the difference in contraction between the collar assembly, and the iron yoke which contacts about 2 mils per inch, is 1 mil per inch. The following table, using the previously calculated deflections, predicts the radial gap along the axes in mils between the collar and yoke as the magnet is cooled down and then energized. The value for "collar Δ radius" is the actual radial motion the collared-coil assembly is expected to experience for the condition stated in the table. With a collar radius of about 2.2 inches, the net "4 K shrinkage" used to calculate the radial gap is 2.2 mils due to the 1 mil per inch difference in contraction between the collared-coil assembly and the iron yoke.

Predicted Radial Gap between Collars and Yoke
(Radial dim. in mils - undeflected clearance 10 mils)

	Vertical		Horizontal	
	Collar Δ radius	gap	Collar Δ radius	gap
R.T. Prestress	1.3	8.7	1.1	8.9
4 K Shrinkage	-6.5	10.9	-6.5	11.1
4 K Energized (energized-R.T. prestress)	-1.4	12.3	1.4	9.7

Note: Energized gap greater then R.T. gap.
Therefore: collars always self-supporting.

MATERIAL SPECIFICATIONS

With the selection of the 15 mm collar design, the stress analysis indicates the need for a high strength stainless steel. Prior experience with CBA indicated that the nitrogen-strengthened austenitic stainless steel Nitronic 40, also known as 21Cr-6Ni-9Mn, a product of Armco Inc., met the strength required and exhibited very low and stable permeability down through cryogenic temperatures. A newer and cheaper ARMCO alloy, Nitronic 33, 18Cr-3Ni-13Mn, also meets the strength requirements. The reason for the need of a low permeability stainless is because the collars also serve as the coil poles. The poles need to be as non-magnetic as possible. A variation in the material's coefficient of permeability of ±0.0003 creates a central field error B_o of ±1 E-4 at low field by affecting the transfer function.[5,6]

Nitronic 33 and 40 are covered by specification ASTM A412. Nitronic 40 is also covered by a preliminary report dated March 1983 from the National Bureau of Standards titled Structural Materials for Superconducting Magnets. The following table outlines the minimum mechanical properties of the material as called for by these specifications and gives some actual

measured results.[7] The final column is data from the NBS report on average properties at 4° K. The room temperature yield strength of ASTM A412 stainless steel is about twice that of conventional 304 and 316 grades of stainless steels and the ratio between the two types increases to about 3.5 to 1 at 4° K.

ASTM A412 Stainless Steel Mechanical Properties

	Minimum Specified	Actual Measured	4° K Average
UTS	100 ksi	111-115 ksi	240 ksi
0.2% YS	60 ksi	71-73 ksi	180 ksi
Elong. % in 2"	40%	45-46%	~5 % **
Permeability *	-	1.0017	1.0017

* Nitronic 33 measured at BNL.
**NBS Report - NBSIR 78-884

The loading on the collars will cycle over the life of the SSC due to thermal cycles and field strength variations. Assuming a life of 30 years and two cycles per day for each year, the total number of cycles is of the order of 10^4. The number of days of operation per year will actually be less. However, this number does take into account the extra cycles that will occur during the first years due to startup, and during the final years due to wear. Interim results from the NBS report indicate a stress-controlled fatigue life for notched samples at cryogenic temperatures and a maximum stress of 50 ksi to be greater than 10^5 cycles. Several consecutive collars in a collar pack would have to fail before any damage to the coils would be expected.

MEASURED RESULTS

As of this writing eight 4.5 m long Design "D" collared magnets have been assembled and tested at BNL. Six 1 m long magnets with the same collar have also been assembled and tested at LBL. Additionally, several six inch long, single collar pack models have been assembled at both labs. From all these assemblies, measurements of collar deflections have been taken to compare with those calculated. The collars have also been instrumented with strain gages to measure coil stresses.

Room temperature measurements of the collars loaded by the coil prestress gave deflections that were greater than those predicted. Part of the reason for this difference is due to the clearance and tolerances that are necessary to assemble the actual collars that the model did not allow for (i.e. holes, key slots, tabs). This accounts for 2-3 mils radially on the vertical axis and somewhat less on the horizontal axis. The rest of the difference between measured and calculated deflections is due to inaccuracies in the original model, both in the way it was modeled and in the way loads were applied. Measurements of collars assembled at BNL showed that if the collars are not sufficiently supported radially on the sides then the collars can be yielded during loading. Therefore, the tooling needs to be very stiff to prevent collar yielding.

Cryogenic measurements of collar deflections on the magnets tested at LBL does seem to agree with those predicted.[8] Both the relative shape of the deflected collar and the magnitude of its deflections between the un-energized and energized states matches the calculated numbers. The table below summarizes these results from both BNL and LBL. Note the differences in the measured deflections due to room temperature prestress between BNL and LBL assemblies. This is due to yielding in the BNL assembled collar from bending during loading in the press. LBL reports yielding in the keyways of the collars which was not observed in the collars assembled at BNL.

Measured Radial Collar Deflections (mils)

	R.T. Prestress			4° K Energized	
	Measured BNL	Measured LBL	Calculated	Measured	Calculated
Vertical	3.5/	7.0	1.3	1.1-2.1	1.4
Horizontal	6.0/	3.5	1.1	1.6	1.4

The strain gauge transducers in the coils are able to measure both inner and outer coil stresses in the collared coil assembly, primarily during room temperature assembly. Several magnets, both at LBL and BNL, have had strain gages calibrated to measure coil stresses at cryogenic temperatures. While there is a high level of confidence in the measured stresses at room temperature, there is considerably less confidence in cryogenic measurements due to less experience with these measurements and thermal offsets.

The plot in Fig. 8 gives a time history of the coil stresses from room temperature assembly through cooldown to 4° K. The most obvious feature of the plot is the large difference in the measured coil stresses between when the collars are loaded in the press and when the collars are keyed and the press force is removed. Coil prestress remaining after the collars are keyed is 2-3 times less then the stress measure when the collars are being pressed. While this does not prevent assembly, it results in coil and collar stresses during pressing that are close to, or at, their elastic limit. These stresses can lead to electrical shorts in the coil assembly or yielding of the collars. The maximum remaining prestress in the coils immediately after keying is close to the estimated minimum required at assembly that was presented earlier. This means there is no room to provide for a margin of safety for assembly prestresses which can lead to problems later in the production of large quantities of magnets.

Another area that is of interest in the strain gauge measurements of coil stress is at cooldown. The transducers show losses of 2-5 ksi in the coils, more than those calculated. If this is true, than the assembly prestress requirements need to be raised. Even though it appears that the prestress in the coils at 4° K is below what is required, the magnets reach operating current with little training and good measured harmonics. The reason for this could be due to the small motions in the coils even with 1/2 of the required prestress as shown in Fig. 3.

Measured Deflections of BNL Collars

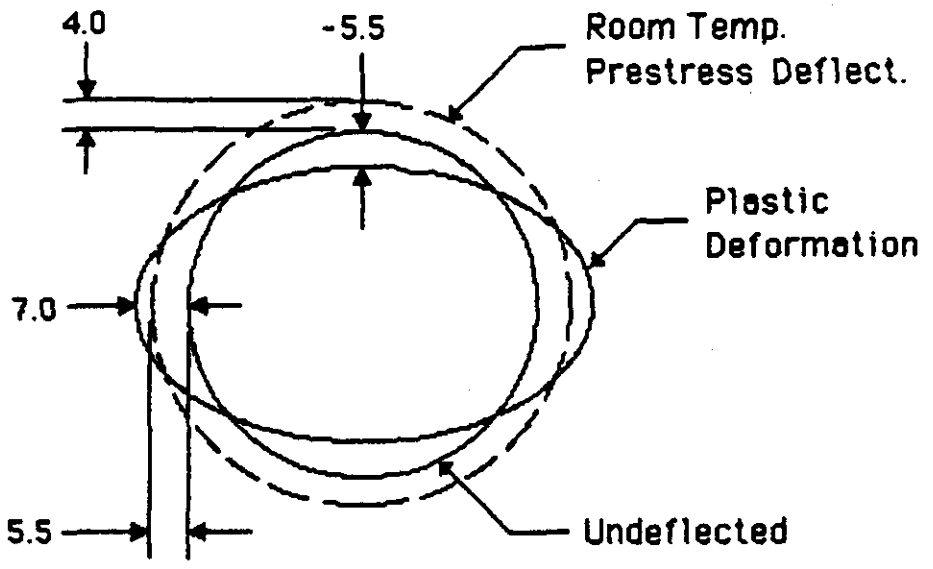

ASSEMBLY EXPERIENCES

The assembly procedure and experiences described below are from the 4.5 m Design "D" magnets assembled at BNL. The collar packs are assembled over the coils which have three layers of 5 mil Kapton sheet over them. Between the first and second layer of Kapton is placed a 4 mil stainless steel strip heater about two thirds the width of a coil quadrant and the full length of the magnet. The bore tube with its trim package is already positioned inside the coils. The assembly is placed onto a lower cradle positioned on the incremental press which locks on the vertical key tab of the collars to align them down the entire length. The press has an upper cradle which is identical to the lower cradle except in length. It is the length of six collar packs, 36 inches. The cradles serve as the fixtures that transfer the load of the press to the collars during the keying operation. The cradles also serve to restrain the collars during loading. Figure 9 shows a cross section of the collared coil assembly in the cradles and press. The cradles shown in this figure, which will be used in the 16.6 m collar assembly, are stiffer then the cradles used for the first 4.5 m magnets which allowed bending in the collars during loading.

The press is designed to load the collared coil assembly incrementally down the magnet's length. The magnet remains stationary as the top part of the press moves down the length of the magnet guided in slots machined in the lower platen of the press. The press is capable of applying up to 36,200 lbs. of compressive force per linear inch onto the collar-coil assembly. During the pressing operation with the first magnet, dial indicators were used to measure the deformation of the collars and tooling. These measurements showed that the collars were deformed vertically 20 mils on the radius while being keyed. Horizontally the collars bowed out 5-8 mils on the radius. Experiments with stiffer cradles all but eliminate these deflections during pressing and the resulting yielding in the collars.

Slight rotations between individual collar laminations in the loaded

collar packs caused the vertical key on the collar packs to grow 2-3 mils. This caused an interference between the key and the mating slot in the yoke. The result was problems in centering the collared-coil assembly vertically in the yoke and closing the two yoke halves over the collars. Yokes for the 16.6 m magnets have wider vertical slots to compensate for this effect.

FURTHER WORK

Experience to date has shown that in order to achieve a minimum prestress at 4° K which restrains the coils from motion at the poles, three areas of prestress losses have to be accounted for in order to determine the assembly prestress. The assembly prestress is the coil stress measured after keying. They are:

- Press loading losses
- Relaxation
- Cooldown losses

The press loading losses place an upper limit on the coil prestress after keying. To require too high a stress after keying would mean exceeding the yield limit of both the collars and coils while pressing, and increasing the chances of turn-to-turn shorts in the coils. The losses due to relaxation and thermal contraction place a lower limit on the assembly prestress. To go below this limit would mean the stress remaining in the coils at 4° K would not be sufficient to restrain the coils from moving at the pole at operating field. The difference between the upper and lower limit is the "assembly window" for assembly prestress. The ongoing work with collars at BNL and LBL is aimed at better defining and/or increasing this window by either verifying or lowering any of the before mentioned losses.

The stress loss after pressing, which accounts for the largest amount of loss, is receiving the most amount of attention. The loss is basically due to the low overall stiffness of the keyed collars. Finite element analysis done at LBL indicates that by welding the collar packs together to prevent rotation around the assembly pins, and at the key slot after assembly onto the coils, makes for a stiffer collar and lowers losses.[9] Just eliminating any yielding in the collars does not effect stress losses. Experiments at BNL with collars of alternative designs and loading schemes, but of the same 15 mm width, seem to show no appreciable improvement over the current design. Further tests with welded collar packs will be done to verify any improvement in collar prestress losses.

There appears there is little that can be done about prestress losses due to relaxation except to verify the actual losses over long periods of time. It is known that temperature and possibly humidity effect the amount of relaxation in the coils over time. Therefore, studies need to be made to properly specify the storage environment so as to either minimize or make consistent the relaxation loss. This will allow for a more accurate specification of the assembly prestress.

Stress losses from cooldown is another area which little can be done in without changing the actual material the collars are made from (i.e. aluminum). However, there is a problem as far as understanding the actual amount of loss. As mentioned earlier, preliminary calculations indicate the prestress loss should not exceed 1500 psi. Strain gage measurement indicate losses from 2000-5000 psi. While there is considerable doubt as to the accuracy of the measured losses, they need to be remeasured in controlled experiments and verified before a final determination of the assembly prestress can be made. At present, the cooldown losses contribute the greatest amount of uncertainty in determining the assembly prestress.

As an alternative design, LBL is considering an aluminum collar of the same 15 mm width. Calculations by LBL indicate that the increase in prestress resulting from cooldown is more than sufficient to offset the greater press loading losses due to the lower material stiffness.[10] The result is a larger "assembly window" for prestress. Models need to be made and tested to verify these predications. While the collar deflections at room temperature should be about the same in the aluminum collars as in the steel collars because of a lower required assembly prestress, the deflections due to Lorentz force loading will increase by a factor of three. It needs to be considered if this deflection is allowable or if it needs to be constrained.

CONCLUSIONS

The collars seem to have worked quite well in the eight 4.5 m magnets built at BNL and in the six 1 m magnets built at LBL. At BNL, the magnets trained to the short sample limit in less than five quenches typically at 4.5° K. The eighteen measured harmonics were better then predicted in both their average values and their repeatability between magnets except a_1-a_3.[11] The a_1-a_3 differences were due to vertical centering errors of the collars in the yoke. As previously mentioned, the cause of these errors have been identified and will be corrected in the 16.6 m magnets. However, there are some weak points in the present design that need to be addressed.

Experiments have shown that yielding in the 15 mm wide stainless steel collars can be eliminated by moving the key slots closer together on the collars and to use tooling with sufficient stiffness to prevent the collars from bowing out horizontally during press loading. A new collar cradle which offers this stiffer support has been built and is being used in the 16.6 m magnet assembly. The key slot change will take effect when the next order of collars is made. The first four 16.6 m magnets will use the present design of collars.

In order to make the collars practical for large production runs, the "assembly window" needs to be better defined and made larger. This is being done by addressing the three areas of prestress loss: press loading losses, coil relaxation, and cooldown losses. With improvements in these areas, or the development of an alternative design, the collared-coil design can move from pre-production status to a full production design.

ACKNOWLEDGMENTS

The design drawings of the collars and cradles were done by Vic Scotto whose input was invaluable.

Experimental data on the mechanical properties of the coils was taken by Ed Baker.

Discussion with Mike Anerella provided insight on coil stresses and assembly experiences with the BNL 4.5 m magnets.

Discussions with Gerry Morgan on the magnetic design of the magnet are reflected in the section on magnetic considerations.

Thanks goes to Ralph Shutt for spending the time to review this paper and to offer constructive criticisms.

Discussions and visits with Craig Peters and Ken Mirk from Lawrence Berkeley Laboratory were most helpful in both the design and understanding of the collars.

NOTES

1. Morgan, G.H., "The One-in-One SSC Dipole with C5 Coils," SSC Technical Note No. 23, Feb. 23, 1985.

2. Shutt, R.P., "Azimuthal Coil Prestress and Motion in Superconducting Cosθ Magnets. In: Particular SSC Dipoles with Collared Coils, and Prestress Losses During Cooldown," SSC Technical Note No. 42, Feb. 10, 1986.

3. Anerella, M., Hoffman, A. et al., "Stress Relaxation Studies of CBA and SSC Coil Sections", IEEE Transactions on Nuclear Science, Vol. NS-32, No. 5, Part 2, Oct. 1985. Presented at 1985 Particle Accelerator Conference.

4. Morgan, G.H., "Effect of Varying the Coil to Iron Gap in One-in-One Dipoles," Magnet Division Note 114-1, Jan. 7, 1985.

5. Private communication with G.H. Morgan.

6. Gupta, R., "Effect of the Steel Collar on the Magnetic Properties of SSC Dipole," Magnet Division Note 153-1, Aug. 5, 1985.

7. Measured data from material certification reports supplied by Armco Electrical Steel Division.

8. Peters, C., et al., "Design and Performance of 40 mm, 6.5 T, Collared, Cold-Iron Model Magnets," Lawrence Berkeley Laboratory, submitted to the 1985 Particle Accelerator Conference, Vancouver, Canada.

9. Peters, C., "Design of 15 mm Collars for the SSC Dipole Magnets," LBL-21030, SSC-MAG-66, Jan. 1986.

10. Ibid.

11. Wanderer, P., "Summary of Quench Performance and Field Quality Data From 4.5 m R&D Magnets," Feb. 12, 1986, Appendix to SSC Conceptual Design Review Report.

Table of Figures

No.	Description
1	Magnet Cross Section
2	Coil Lorentz Forces at 6.5 T
3	Coil Deflections for Various Prestress Levels at 6.5 T
4	Finite Element Model of Collared-Coil
5	Finite Element Stress Results - R.T.
6	Finite Element Stress Results - 4° K, 6.5 T
7	Collar Cross Section
8	Measured Coil - Loading Profile
9	Collar Press Cross Section

Page	Internal Figures and Tables
2	Inner Coil Load Model
3	Minimum Coil Prestress Required at 4° K, 6.5 T
3	Estimated Assembly Prestress Required
5	Calculated Collar Deflections
6	Effect of Collar Width on Conductor J_c
7	Radial Gap Between Collars and Yoke
8	ASTM A412 Stainless Steel Mechanical Properties
9	Measured vs Calculated Collar Deflections
10	Measured Deflections of BNL Collars

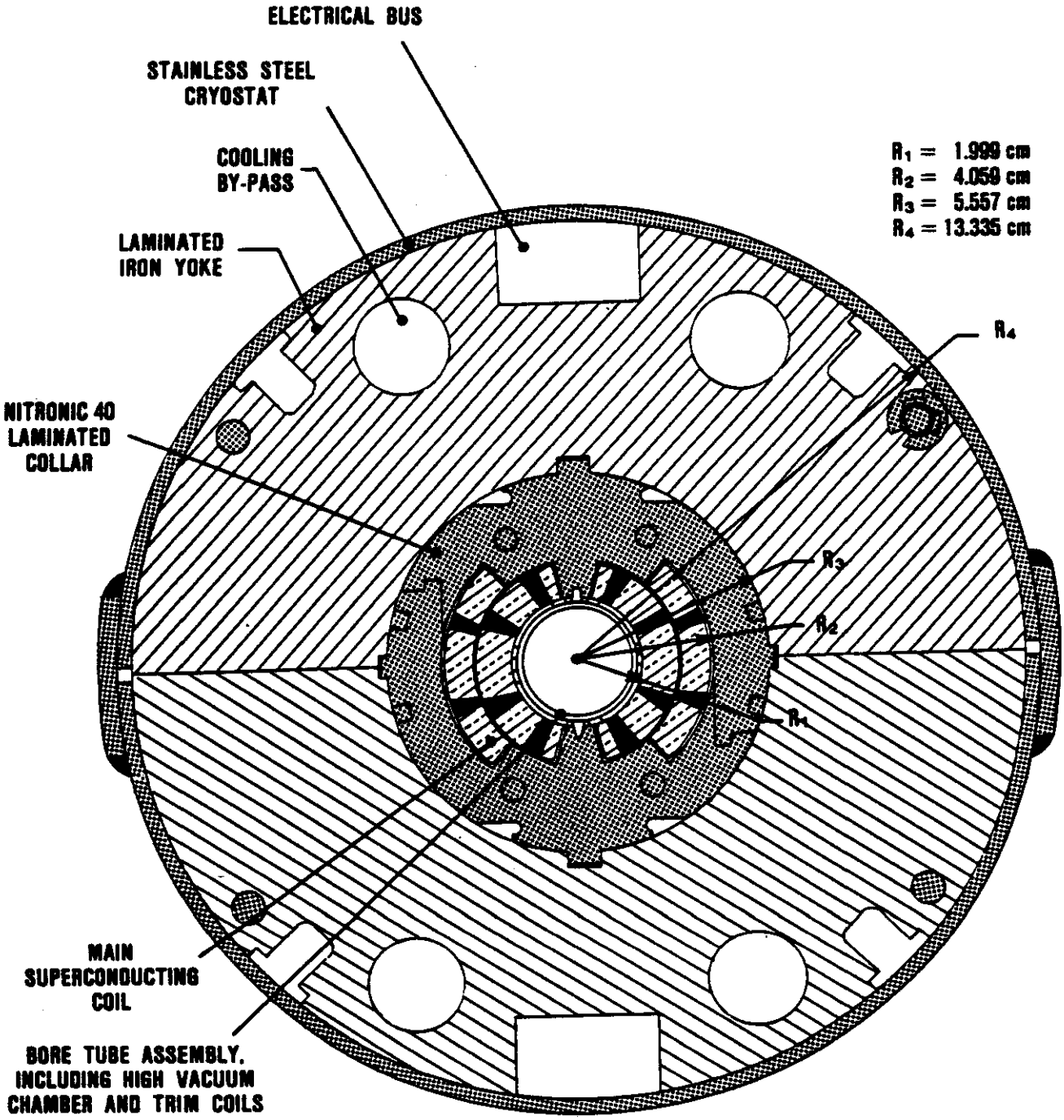
ELECTRICAL BUS
STAINLESS STEEL CRYOSTAT
COOLING BY-PASS
LAMINATED IRON YOKE
NITRONIC 40 LAMINATED COLLAR
MAIN SUPERCONDUCTING COIL
BORE TUBE ASSEMBLY, INCLUDING HIGH VACUUM CHAMBER AND TRIM COILS
R_1 = 1.999 cm
R_2 = 4.059 cm
R_3 = 5.557 cm
R_4 = 13.335 cm
R_4
R_3
R_2
R_1

FIG. 1

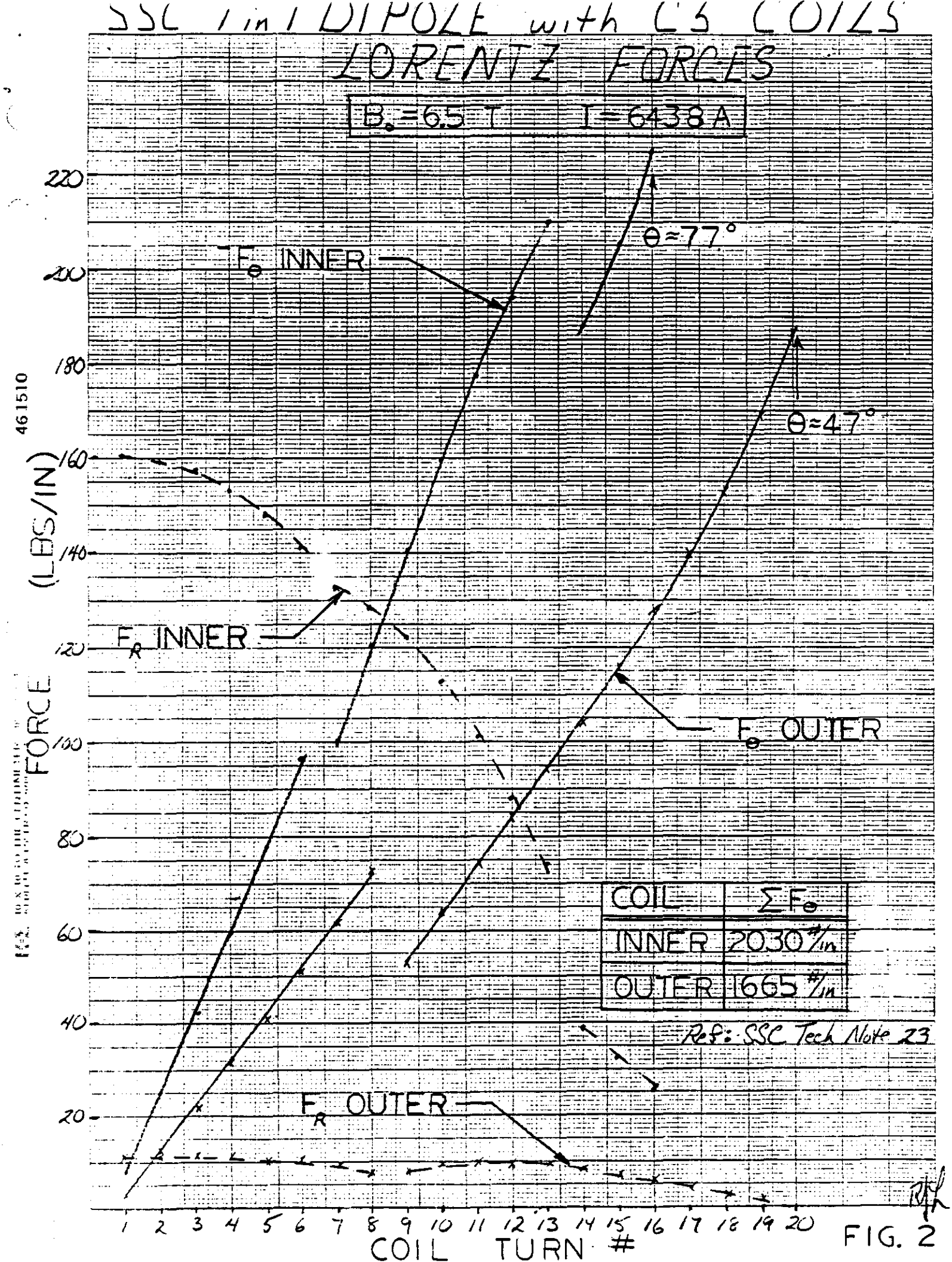
SSC 1 in 1 DIPOLE with C5 COILS
LORENTZ FORCES
B₀ = 6.5 T I = 6438 A
θ ≈ 77°
θ ≈ 47°
F_θ INNER
F_R INNER
F_θ OUTER
F_R OUTER
FORCE (LBS/IN)
COIL TURN #
COIL | ΣF_θ
INNER | 2030 #/in
OUTER | 1665 #/in
Ref: SSC Tech Note 23
FIG. 2

COIL DEFLECTIONS for VARIOUS PRESTRESS LEVELS

AT 6.5 T

OUTER COIL

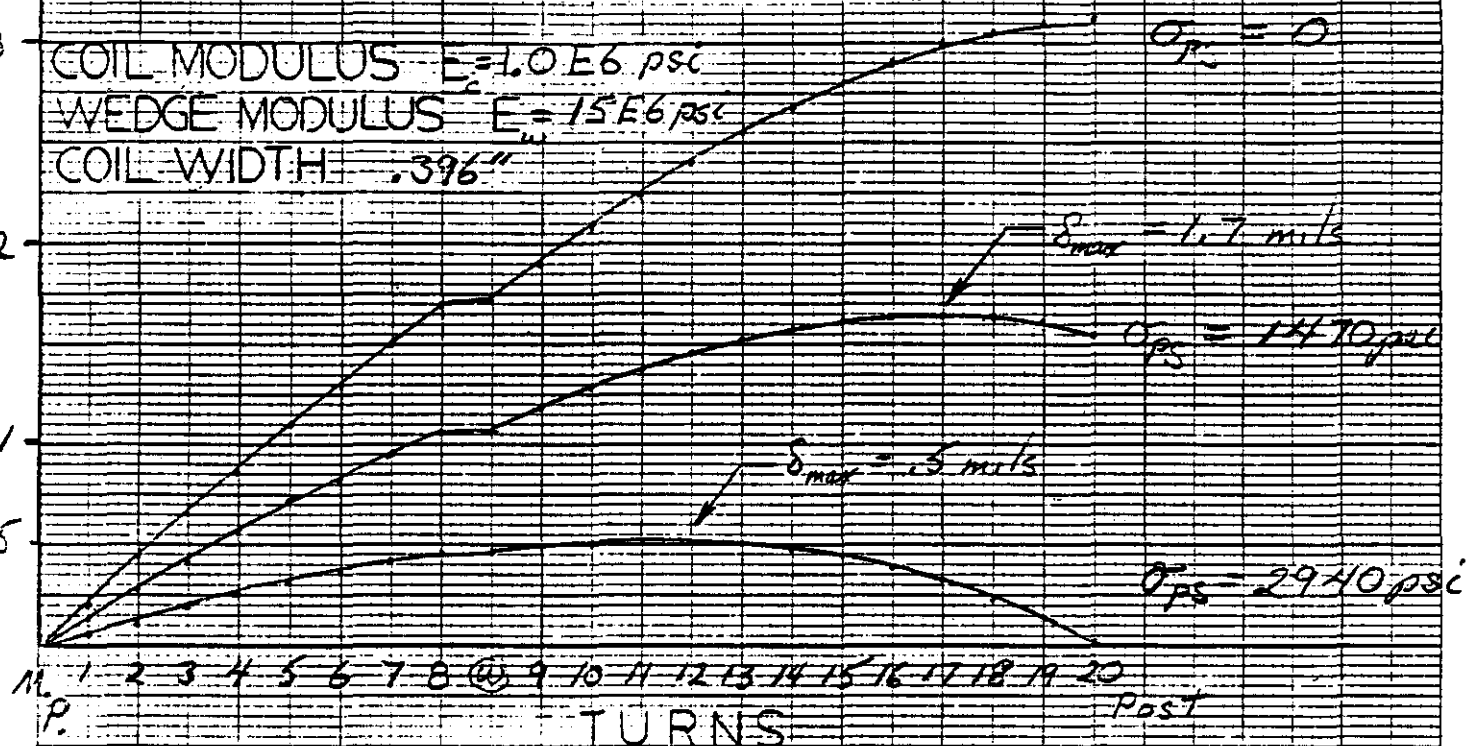

INNER COIL

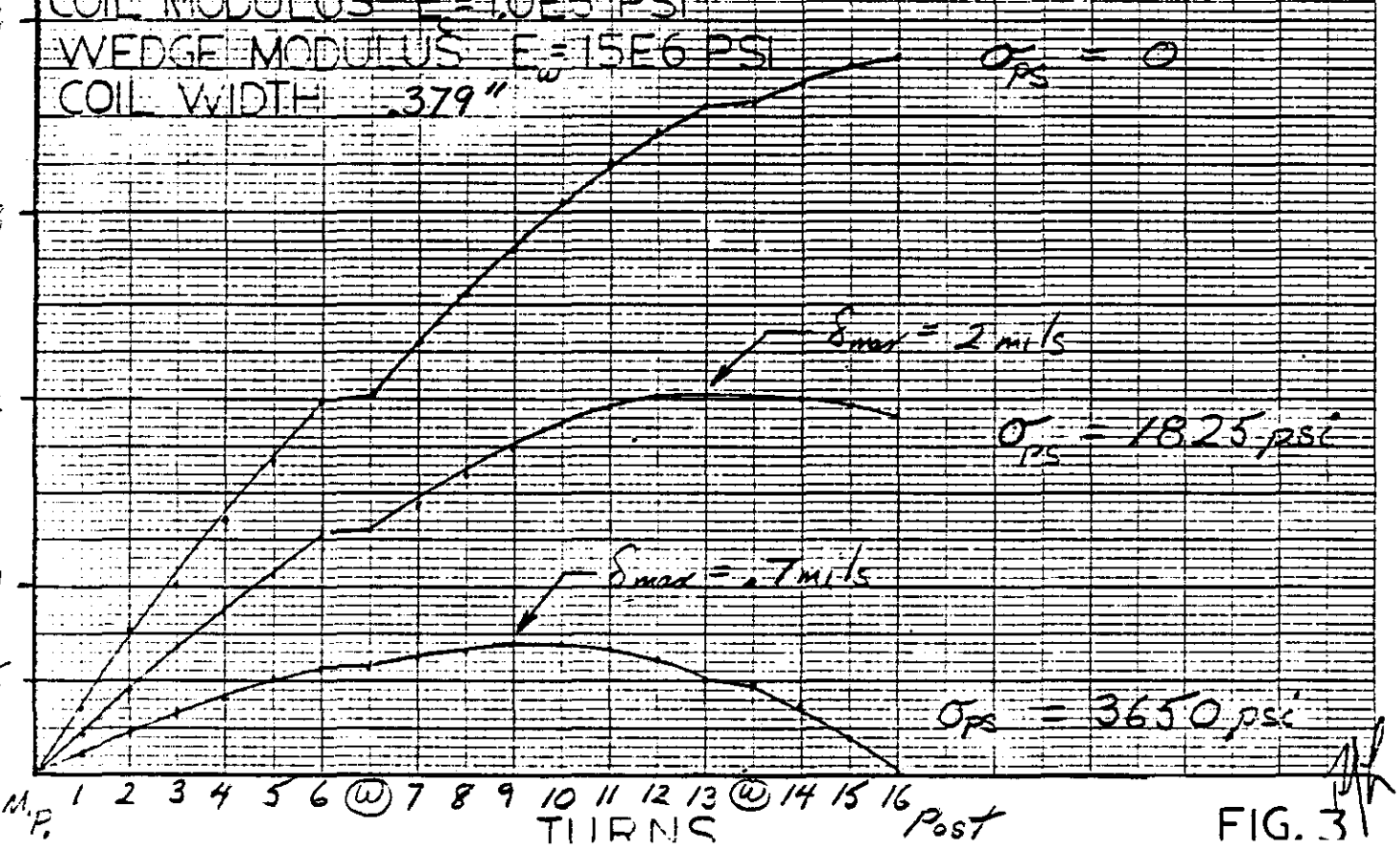

FIG. 3

46 1320
K+E 10 X 10 TO ½ INCH 7 X 10 INCHES KEUFFEL & ESSER CO. MADE IN U.S.A.

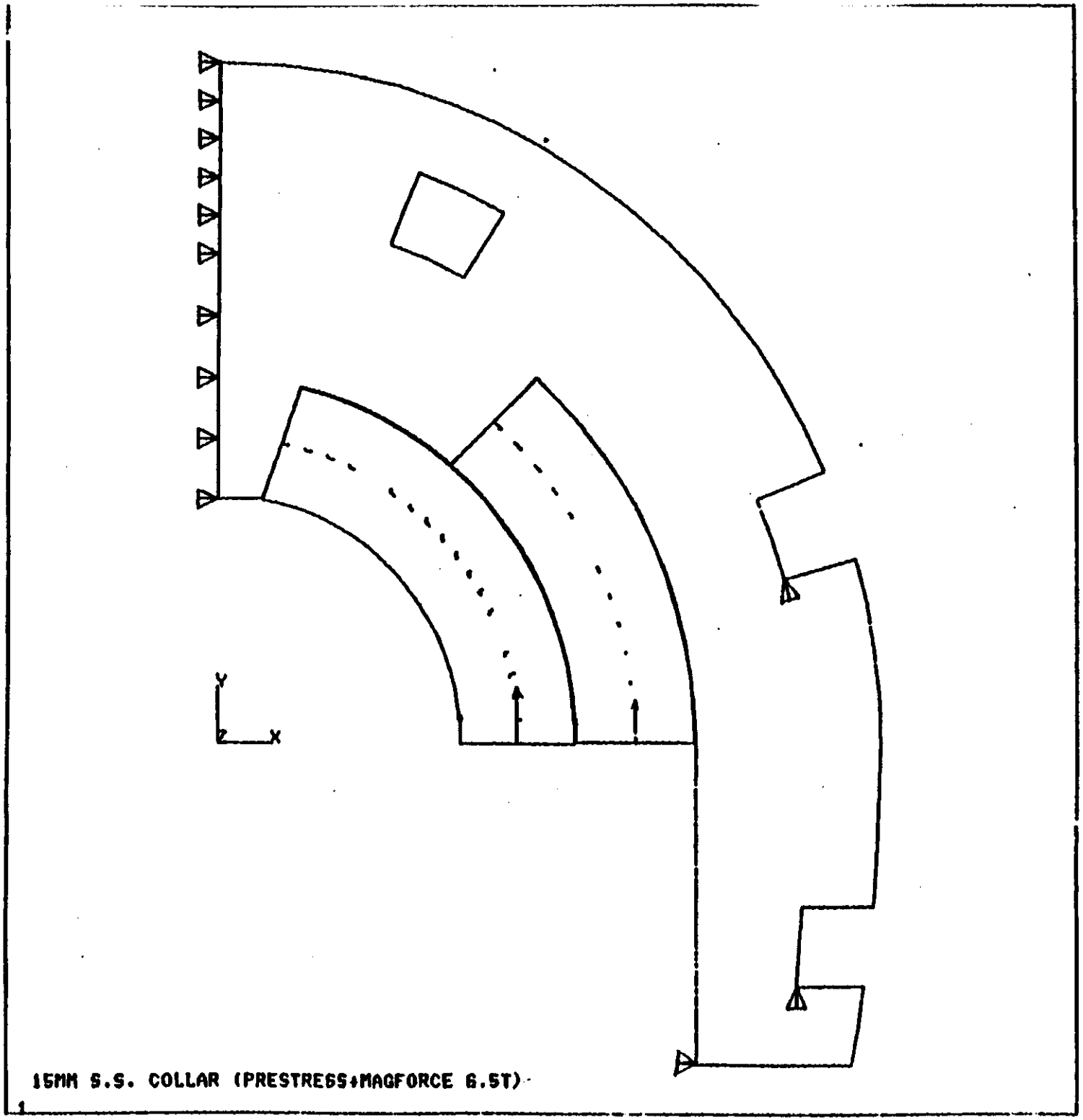

ANSYS
7/31/84
11.2072
PREP7 ELEMENTS
TDBC=1
FBC=1

AUTO SCALING
ZV=1
DIST=1.74
XF=1.05
YF=.584
EDGE

FIG. 4

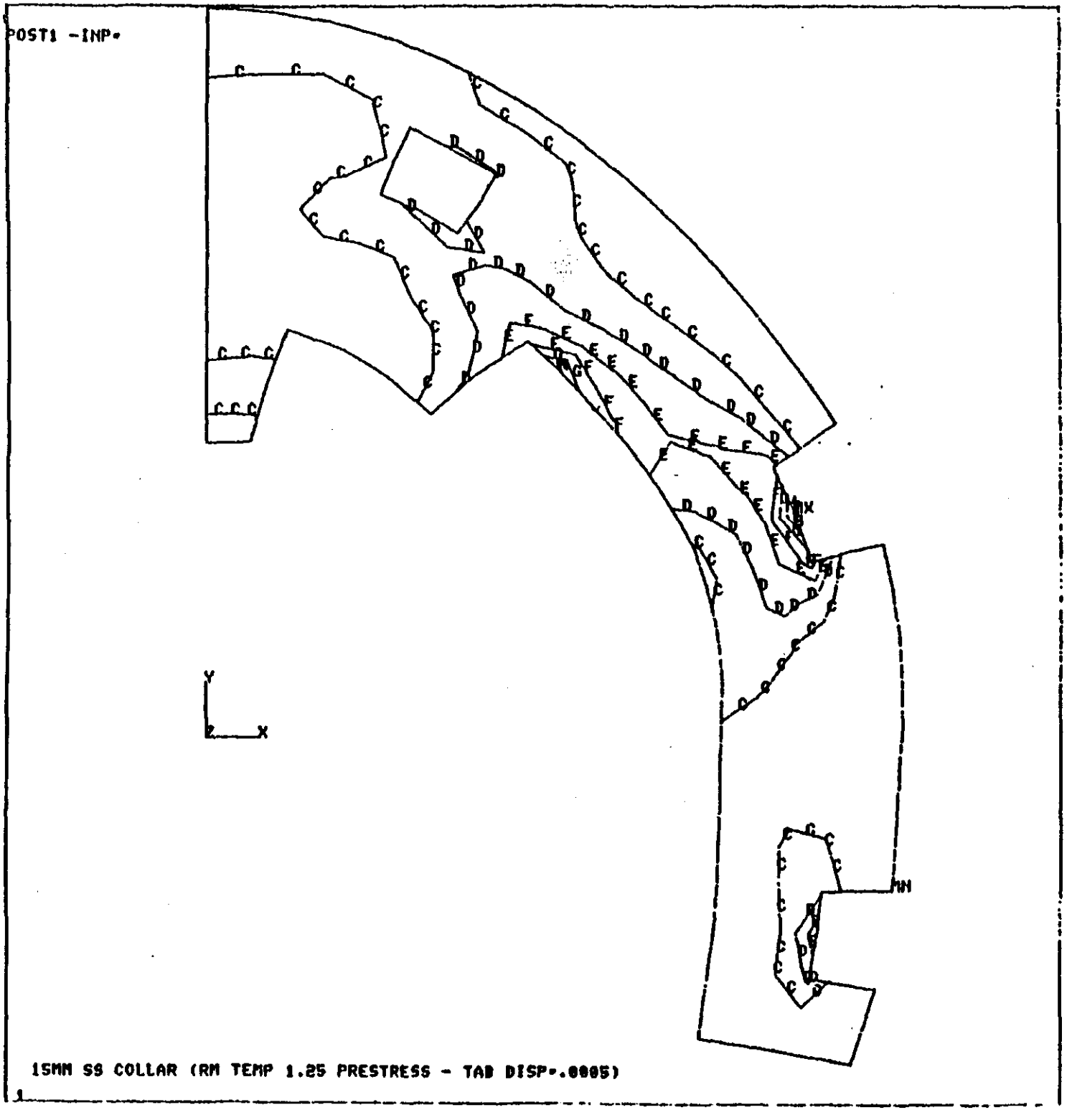
POST1 -INP-
ANSYS
8/20/84
11.1644
POST1
STEP=1
ITER=30
STRESS PLOT
SIGE
AUTO SCALING
ZV=1
DIST=1.73
XF=1.08
YF=.575
EDGE
MX=57780
MN=533
C=8000
D=16000
E=24000
F=32000
G=40000
H=48000
I=56000
MX
MN
Y
Z
X
15MM SS COLLAR (RM TEMP 1.25 PRESTRESS - TAB DISP=.0005)
1

FIG. 5

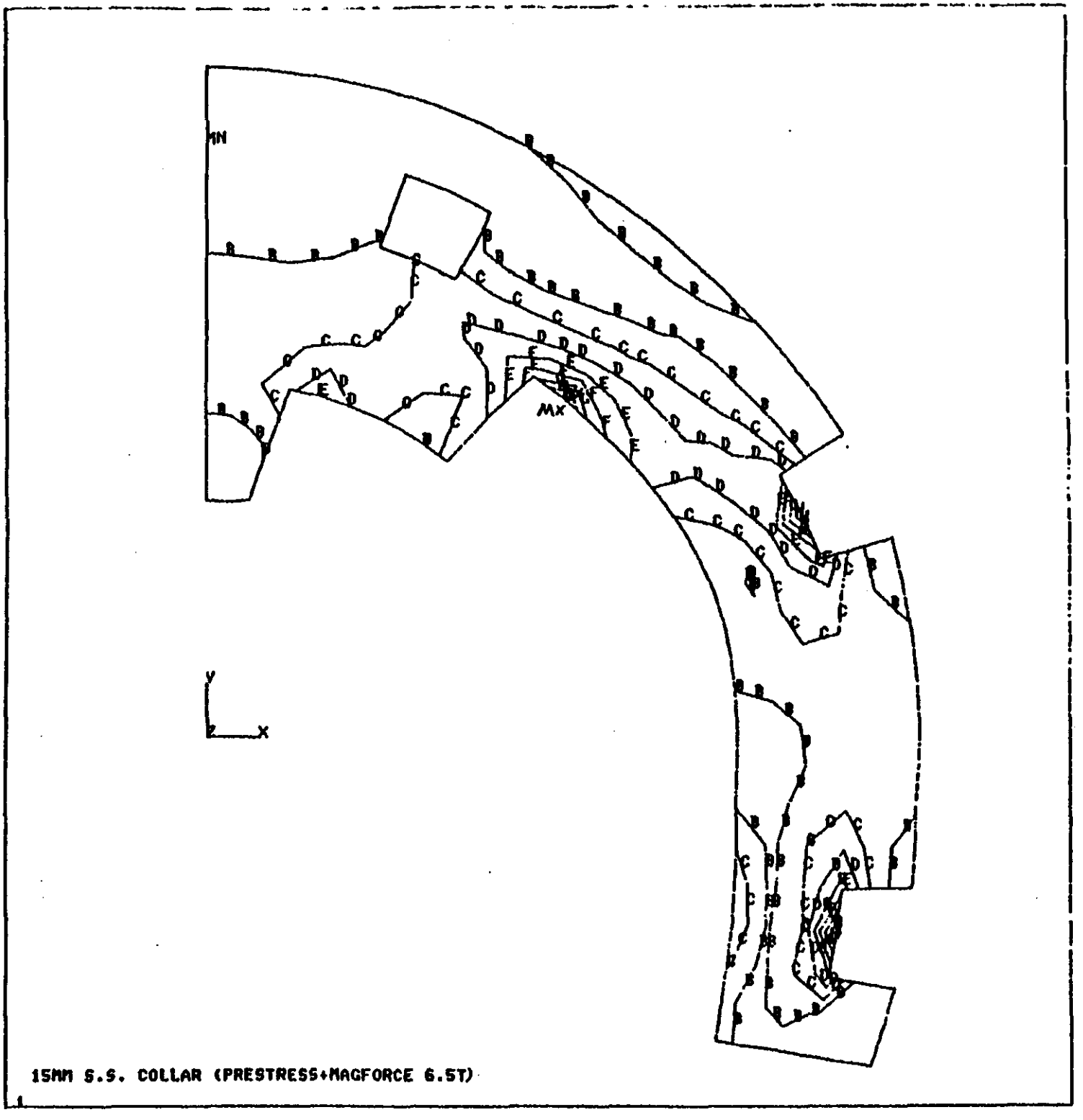

ANSYS
8/22/84
10.5722
POST1
STEP=1
ITER=30
STRESS PLOT
SIGE

AUTO SCALING
ZV=1
DIST=1.73
XF=1.08
YF=.575
EDGE
MX=41611
MN=217
B=5000
C=10000
D=15000
E=20000
F=25000
G=30000
H=35000
I=40000

FIG. 6

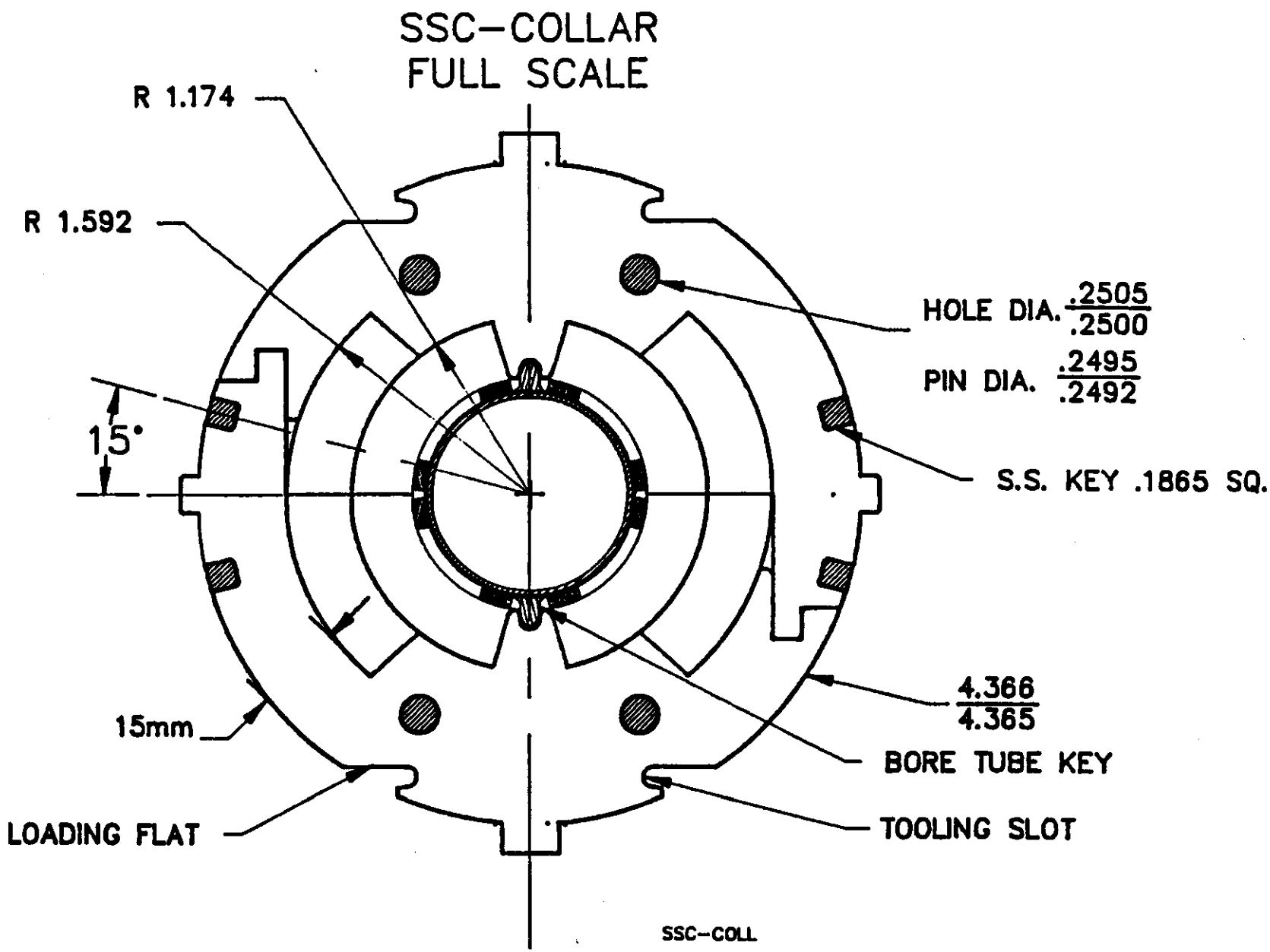
SSC-COLLAR
FULL SCALE
R 1.174
R 1.592
15°
HOLE DIA. .2505/.2500
PIN DIA. .2495/.2492
S.S. KEY .1865 SQ.
4.366/4.365
BORE TUBE KEY
TOOLING SLOT
15mm
LOADING FLAT
SSC-COLL

FIG. 7

Measured Coil-Loading Profile with Design "D" Collars

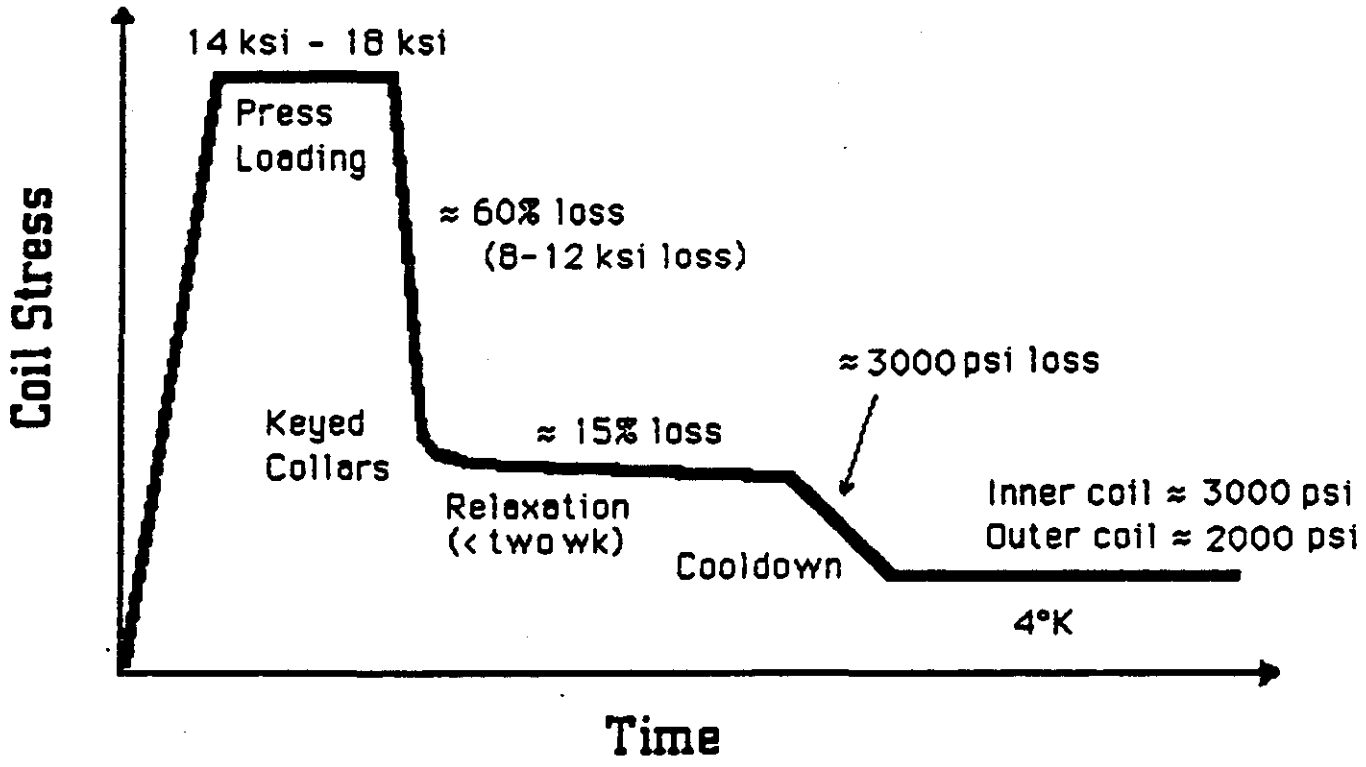

Data from eight BNL 4.5 m magnets and six LBL 1 m magnets

FIG. 8

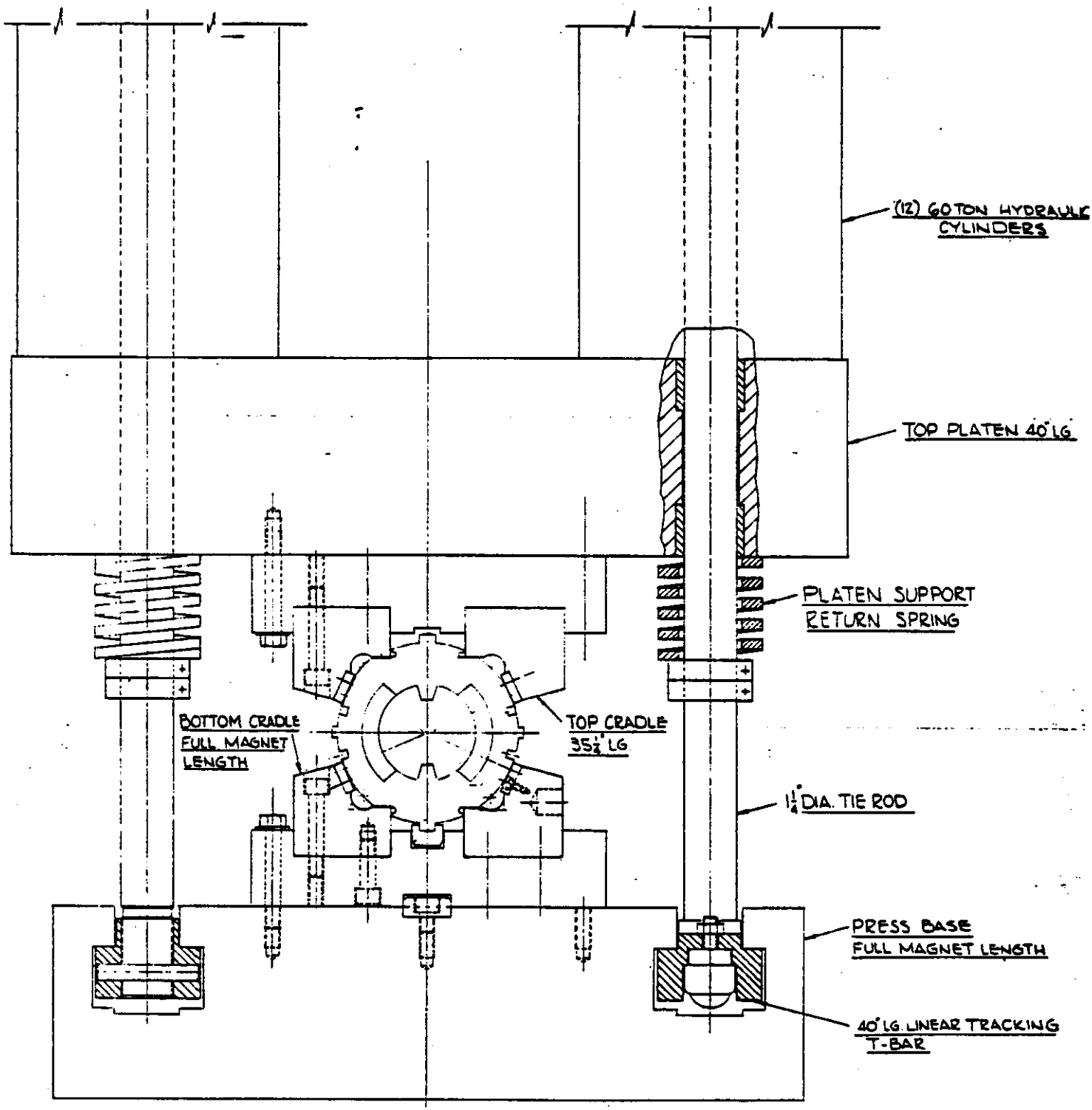
(12) 60 TON HYDRAULIC CYLINDERS
TOP PLATEN 40" LG
PLATEN SUPPORT RETURN SPRING
BOTTOM CRADLE FULL MAGNET LENGTH
TOP CRADLE 35¼" LG
1¼" DIA. TIE ROD
PRESS BASE FULL MAGNET LENGTH
40" LG. LINEAR TRACKING T-BAR

FIG. 9

Revised 1/23/86

DISTRIBUTION

BLDG. 911

AD Library
(H. Martin)
G. Bunce
H. Foelsche
J. Grisoli
P. Hughes (1) + 1
for each author
D. Lazarus
D. Lowenstein
T. Sluyters

FOR SSC PAPERS

FNAL

W. Fowler

LBL

R. Donaldson (2 copies)
P. Limon
C. Taylor
M. Tigner
R. Wolgast

TAC

F.R. Huson
Technical Library

BLDG. 902

D. Brown
J.G. Cottingham
P. Dahl
A. Flood
M. Garber
C. Goodzeit
A. Greene
R. Gupta
H. Halama
E. Kelly
R. Louttit
A. Prodell
W. Sampson
R. Shutt
J. Sondericker
P. Wanderer
E. Willen

BLDG. 1005S

J. Claus
E. Courant
F. Dell
E. Forsyth
H. Hahn
K. Jellett
S.Y. Lee
Z. Parsa
G. Parzen
P. Reardon
S. Tepekian

S&P in Magnet Division for all MD papers

S&P in Cryogenic Division for all Cryo Papers
(and J. Briggs, R. Dagradi, H. Hildebrand
W. Kollmer)

BLDG. 460

N. Samios

BLDG. 510

H. Gordon
T. Kycia
L. Leipuner
S. Lindenbaum
R. Palmer
M. Sakitt
M. Tannenbaum
L. Trueman
D. White

BLDG. 535

W. Casey

BLDG. 725

M. Barton