SSC-N-147

GIN-253
W.A. Wenzel
February 26, 1985
Revised 3/5/85

Use of Correction Currents in Rectangular Aperture 4T Superferric Dipoles

We have simulated the field in a set of superferric dipoles for which the aperture in the iron is a perfect rectangle. With this flat-poletip geometry no corrections are needed below 2T. Equally important, the development of higher multipoles from iron-saturation is monotonic with dipole field such that the ratio of decapole to sextupole is essentially constant to beyond 4T. [Higher multipoles are negligible]. It is found, therefore, that a field-independent distribution of correction-current elements can be used to reduce the fraction of all higher multipoles to below 10^{-4} times the dipole field. This means that only one program of correction-current vs. field is needed.

In Appendix A the performances with three example correction-current distributions are summarized. Here we include some results for configuration a. This particularly promising case, with poletip correction currents only, is especially superconductor-efficient because all currents in each quandrant are in the same direction. The rectangular-aperture geometry is also relatively iron-efficient. The table below shows that the higher multipoles are suppressed to below 10^{-4} for $B \leq 4.1$T. The efficiency of this configuration is indicated by the fact that at 4.1T the required current is less than 50% higher than would be required if there were no saturation.

Table. Multipole content for correction current configuration a (See Appendix A). $b_n \equiv B_n/B_o$. The upper (lower) numbers in each pair refer to the uncorrected (corrected) multipoles. The magnitude of the correction current is scaled to eliminate the sextupole at each dipole field. The ratios of correction current elements are optimized at 2.7T and taken to be constant at all fields.

Quadrant Current (kA)	Eff. $\frac{B_oG}{8\pi I}$	Correction Current (kA)	B_o(G)	$b_2(10^{-4})$	$b_4(10^{-4})$	$b_6(10^{-4})$	$b_8(10^{-4})$
20	0.994	0	19680	6.32	0.41	0.04	0.11
20	0.994	0.077	19674	0	-0.06	0.04	0.11
30	0.912	0	27084	120.08	10.20	-0.03	-0.06
30	0.907	2.253	26910	0	0	-0.03	-0.04
40	0.824	0	32618	239.15	21.47	0.26	-0.18
40	0.815	5.671	32270	0	0.29	0.06	-0.18
50	0.754	0	37299	329.10	29.43	0.37	-0.22
50	0.749	9.393	37063	0	-0.25	0.39	-0.28
60	0.694	0	41199	392.19	34.88	0.60	-0.31
60	0.692	12.561	41056	0	0.75	0.56	-0.40

GIN-252
W.A Wenzel
February 13, 1985
Revised 3/5/85

APPENDIX A

Poleface Windings to Correct Saturation in Superferric Dipoles

As an alternative to iron-shaping, poleface correction windings can be used to eliminate higher multipoles which arise from saturation of the steel. The rectangular picture frame geometry,often used conceptually for unsaturated dipoles, is a particularly useful starting point for two reasons. First no correction is needed below 2T. Second, the sextupole and decapole components introduced by saturation have the same (essentially linear) dependence on field to beyond 4T, and the higher multipoles are negligibly excited. The saturation-induced multipoles can then be eliminated by windings which carry the same correction-current distribution at all fields. The magnitude of this correction current, like the uncorrected multipole content, increases approximately linearly above 2T. As a consequence of the shape-invariance of the required correction current distribution, a single program vs dipole field can be used for all the correction current(s).

A. Coil Shaping

Figure 1 shows quadrants for three geometries that have been simulated using POISSON[1] for 1010 steel. In the 1x2 in^2 rectangular gap in the iron, the field multipoles were obtained on a circle of radius 1cm. At each dipole field the sensitivity of each multipole to each correction current was obtained as a derivative based on linear differences. The validity of the linear approximation was checked using redundant information. For the configuration of Figure 1a at an intermediate field value (2.7T) a linear matrix equation was solved to obtain uniquely the four correction currents which gave zero values for the four multipoles b_2, b_4, b_6 and b_8. At other dipole fields 2.0, 3.2, 3.7 and 4.1T the same ratios were preserved among the four correction currents as the total correction was adjusted to eliminate the sextupole. Table Ia shows that the residual values of the decapole and higher multipoles are also suppressed at all fields to less than 10^{-4} of the dipole field. The uniformity of the results up to 4.1T suggests that if desired this approach can be pushed beyond 4T.

From Table Ia we see that the fraction of the total current which appears in the correction windings, each of which has the same polarity as the main windings, is 7.5 percent at 2.7T, and the required accuracy of power supply regulation for the total correction current is 0.77 percent for a 10^{-4} relative sextupole error. The ampere turn efficiency, the ratio of the current which would be required if there were no saturation to that actually required is very high for this configuration. Table II shows the sensitivities of the multipole components to both the magnitude and horizontal position of each current used in simulation a.

B. Dipole Decoupling

The correction currents shown in figures Ib and Ic, unlike Ia described above, are decoupled from the dipole field; i.e. the first

horizontal moment of the correction current is zero. The primary advantage of this approach is that quench protection may be easier. The disadvantage is that some of the correction current opposes that in the main windings, so that more superconductor is required at a given dipole field.

Configuration b has a particularly simple current distribution, with equal (absolute values of) currents in three of the coils including the triangular one on the poletip. The current in the fourth coil is constrained by the dipole decoupling condition. The total current is adjusted to eliminate the sextupole component at each field. Although Table Ib shows that the higher multipoles are still $\leq 10^{-4}$, the effectiveness of this configuration obviously could be improved further by including more flexibility in the current distribution. At 2.7T configuration b requires 12 percent more total current, essentially the total correction current, than configuration a, for which the single polarity correction currents also help the dipole field.

Configuration c uses the elliptical beam pipe to define the positions of the correction currents. Because these are closer to the reference aperture, less total current is needed than for configuration b, but at 2.7T 6 percent more current is needed than for configuration a. More significant, configuration c, unlike a and b, cannot use as effectively the same current distribution at all fields. Following the procedure used above for a, we obtain the results shown in Table Ic, where a negative decapole term grows at high fields. The extremes of this variation may be reduced by normalizing at a higher field (3.3T instead of 2.7T). These results are shown in parentheses. It is apparent that poleface windings work best on the polefaces, i.e., as near as possible to where the greatest saturation effects occur.

C. Structure of Correction Coil

Figure 2 shows how configuration a could be implemented. There is one current I_0 for the four turns per quadrant main winding. From Table II we see that 78 percent of the correction current is in I_8, which would be a single turn per quadrant cable similar to that used for the main winding. I_C=1.75kA(9.8ka) at 2.7T(4.1T). I_5, I_6 and I_7 would be carried in a multiturn loop with wire spacing adjusted to model the distribution shown in Table II. With a four turn loop i_C=125A(697A) at 2.7T(4.1T). As shown in figure 2 a single correction current program would control both I_C and i_C. The current regulation of i_C relative to I_C needed for a 10^{-4} sextupole error is 3.1 percent.

References.

1. W.A. Wenzel GIN-246, Oct. 23, 1984, GIN-247, Dec. 5, 1984, GIN-249, Jan. 15, 1985.

Figure 1. Correction current configurations simulated using POISSON. The analysis is described in the text. The results are summarized in Tables I & II.

Figure 2. Suggested implementation of configuration a.

Table I. Multipole content, current requirements and ampere turn efficiencies for correction current configurations a, b and c as shown in Figure 1. $b_n \equiv B_n/B_o$. The upper (lower) numbers in each pair refer to the uncorrected (corrected) multipoles. The magnitudes of the correction currents are scaled to eliminate the sextupole at each dipole field. The ratios of correction current elements are optimized at 2.7T and taken to be constant at all fields (see Table II).

Quadrant Current (kA)	Eff. $\frac{B_oG}{8\pi I}$	Correction Current (kA)	B_o(G)	$b_2(10^{-4})$	$b_4(10^{-4})$	$b_6(10^{-4})$	$b_8(10^{-4})$
Configuration a (SSC 21)							
20	0.994	0	19680	6.32	0.41	0.04	0.11
20	0.994	0.077	19674	0	-0.06	0.04	0.11
30	0.912	0	27084	120.08	10.20	-0.03	-0.06
30	0.907	2.252	26910	0	0	-0.03	-0.04
40	0.824	0	32618	239.15	21.47	0.26	-0.18
40	0.815	5.671	32270	0	0.29	0.06	-0.18
50	0.754	0	37299	329.10	29.43	0.37	-0.22
50	0.749	9.393	37063	0	-0.25	0.39	-0.28
60	0.694	0	41199	392.19	34.88	0.60	-0.31
60	0.692	12.561	41056	0	0.75	0.56	-0.40
Configuration b (SSC 18)							
20	0.995	0	19682	6.50	0.79	-0.34	0.22
20.12	0.988	0.12	19670	0	0.43	-0.36	0.26
30	0.914	0	27119	122.3	10.65	-0.47	0.07
33.55	0.817	3.55	27137	0	0.93	-0.69	0.49
40	0.826	0	32673	242.6	21.94	-0.23	-0.06
48.79	0.674	8.79	32534	0	1.14	-0.67	0.78
50	0.756	0	37402	334.1	29.99	-0.12	-0.13
64.14	0.587	14.14	37270	0	0.77	-0.58	-1.04
Configuration c (SSC 22)							
20	0.994	0	19680	6.33	0.45	0.06	-0.10
20.06	0.992	0.059	19689	0	0.27(.38)	0 (.01)	0.11
30	0.913	0	27093	119.4	10.24	-0.03	-0.24
31.85	0.866	1.853	27284	0	0 (1.5)	0 (-.32)	0
40	0.824	0	32620	239.2	21.56	0.27	-0.38
44.69	0.748	4.686	33058	0	-2.98 (0)	0.57 (0)	-0.17
50	0.754	0	37299	329.1	29.46	0.39	-0.43
57.53	0.669	7.533	38092	0	-6.25(-2.0)	1.11(.35)	-0.22
60	0.694	0	41199	392.19	34.92	0.61	-0.51
70.02	0.608	10.025	42143	0	0.75(-3.5)	0.56(.46)	-0.40

Table II.

A. Correction current distributions for configurations a, b and c at 2.7T.

	$\sum\lvert I_{nc}\rvert$ kA	I_5 kA	I_6 kA	I_7 kA	I_8 kA	I_9 kA
Configuration a	2.2521	0.0573	0.2367	0.2060	1.7521	-
b	3.5455	0.9770	0.6145	0.9770	-0.9770	-
c	1.8525	0.1393	0.4706	0.5470	0.0344	-0.6612

B. Sensititivity of multipole content for configuration a at 2.7T to errors (in percent) in each correction current.

$\Delta b_2/\Delta I/I$	(10^{-4}/%)	-0.068	-0.372	-0.175	-0.689
$\Delta b_4/\Delta I/I$		0.046	0.084	-0.035	-0.232
$\Delta b_6/\Delta I/I$		-0.031	0.019	0.016	-0.009
$\Delta b_8/\Delta I/I$		0.017	-0.029	0.002	0.010

C. Sensitivity of multipole content for configuration a at 2.7T to horizontal placement errors in each correction current.

$\Delta b_2/\Delta x$	10^{-4}/mil	0.012	-0.022	-0.065	-0.287
$\Delta b_4/\Delta x$		0.014	0.061	0.027	-0.047
$\Delta b_6/\Delta x$		-0.019	-0.039	0.005	0.038
$\Delta b_8/\Delta x$		0.013	0.018	-0.007	0.004

FIGURE 1

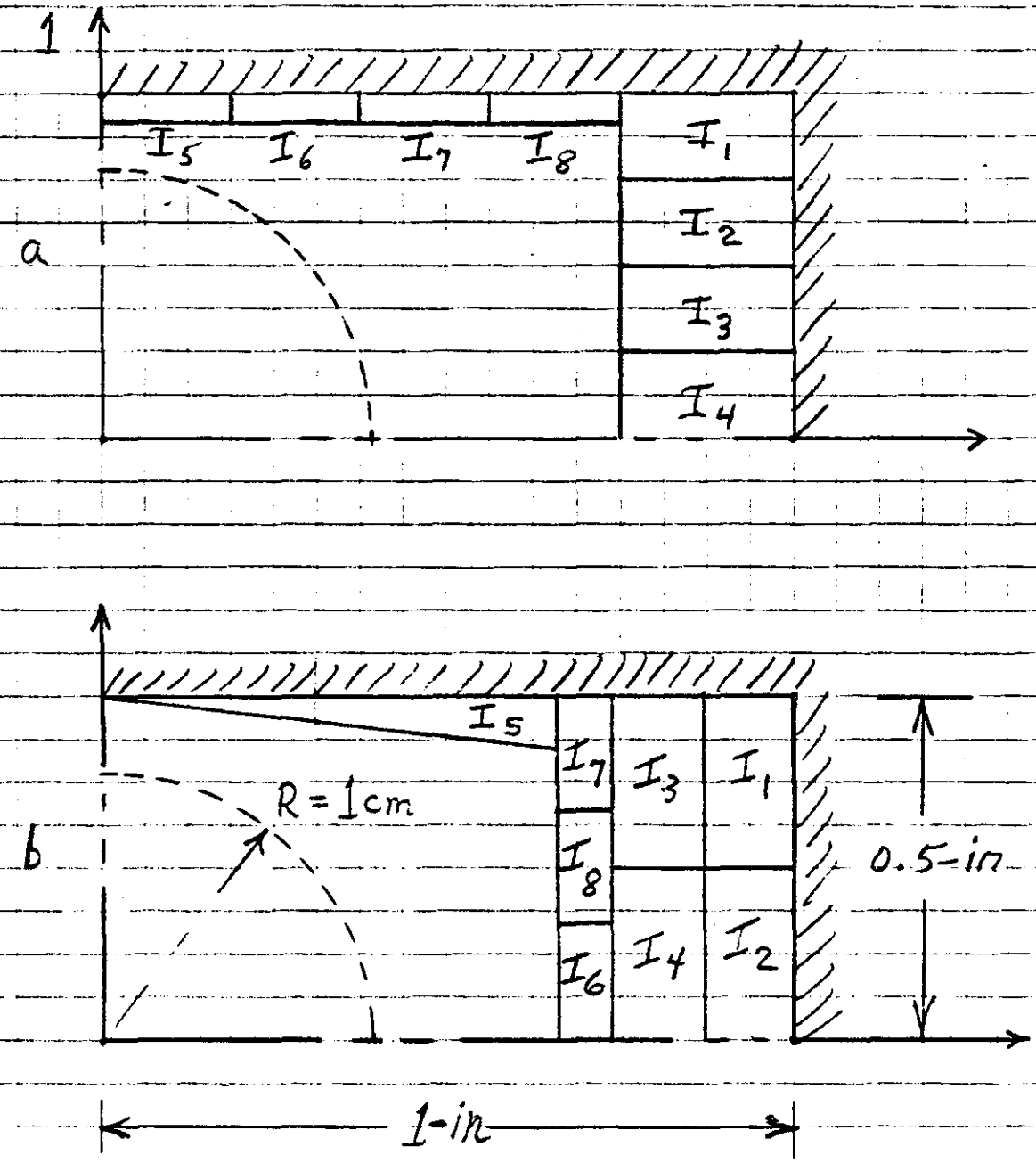
a
I_5
I_6
I_7
I_8
I_1
I_2
I_3
I_4
b
I_5
I_7
I_3
I_1
R = 1cm
I_8
I_6
I_4
I_2
0.5-in
1-in
c
I_5
I_6
I_7
I_8
I_9
I_1
I_2
I_3
I_4

FIGURE 2
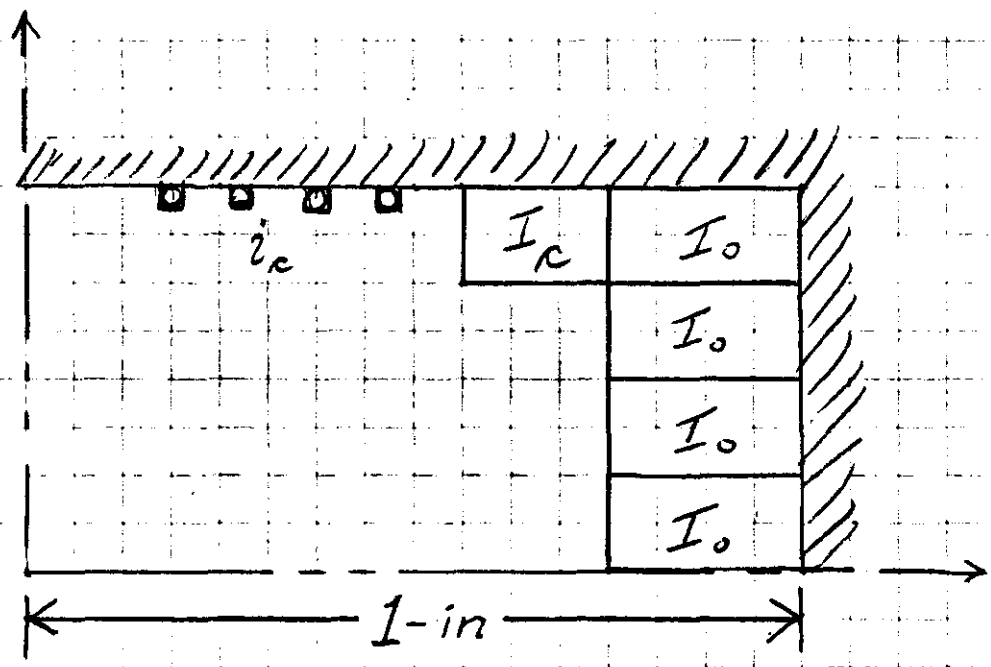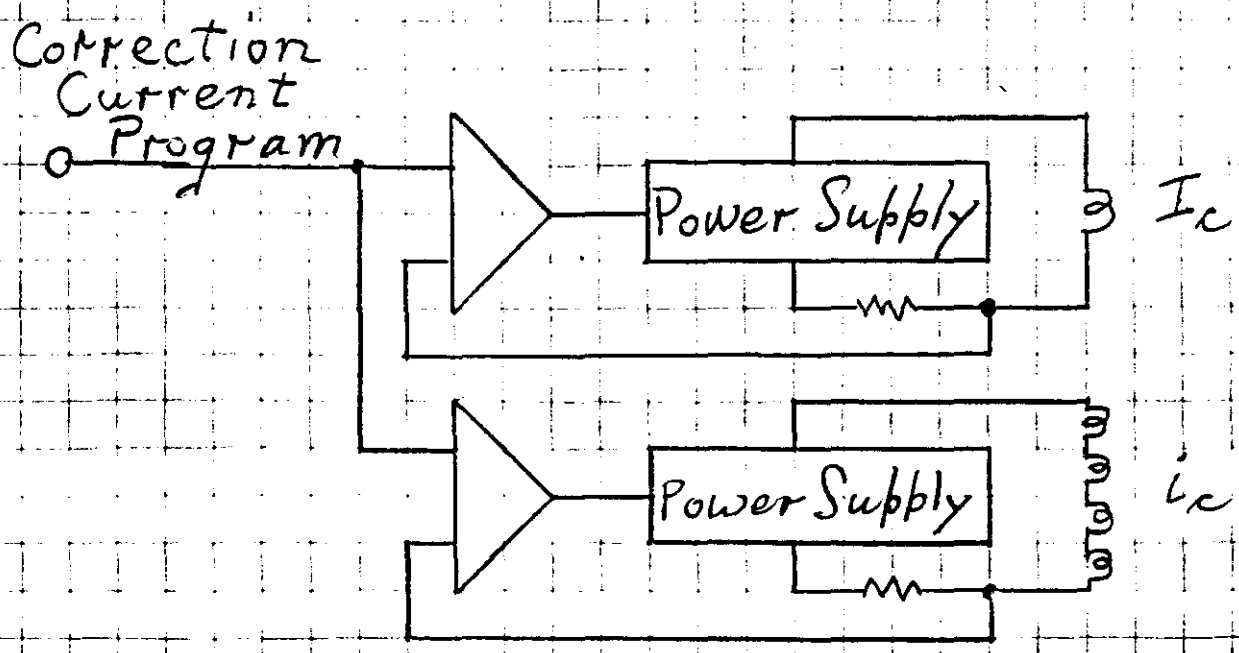
WAW 2/20/85