SSC-N-125

COMPENSATING SCHEME FOR MAGNET OFFSET IN THE NORMAL SSC CELL

A. Garren and K. Steffen

Janaury 7, 1986

SSC-N-125

SSC Technical Note

January 7, 1986

A. Garren / K. Steffen

Compensating scheme for magnet offset in the normal SSC cell

In order to make room for the correction spool units in the SSC lattice, the group of 5 bending magnets between quadrupoles is shifted by $\Delta l = 2{,}59\,m$ away from the center. In the regular arc, this shift does not affect the focusing, but the dispersion will be slightly modified, assuming a finite and equal slope $D_0' = .00022$ at the centers of the F- and D-quadrupoles.

If, in the whole ring, all dipoles are shifted in the same direction and if, in the interaction and utility insertions, the quadrupole focusing is maintained to be antisymmetric with respect to the crossing point, the slope of the dispersion will affect the insertion optics as follows:

– Since the weak focusing effect of the dipoles is negligible,

a perfect match of dispersion and beta functions can be achieved by adjusting the 5 quadrupole strengths in the pair of dispersion suppressors to match, on both sides, to the finite slope $\pm D_0'$ of the dispersion, and by then using the variable quadrupoles between dispersion suppressors to match the beta functions from the given values β^* at the crossing point to the periodic oscillation in the cells. The value $\alpha^* = -\frac{1}{2}\beta^{*\prime}$ need not necessarily be zero for obtaining the same β^* in horizontal and vertical direction or, equivalently, in the two rings that cross at this point.

- In order to have the same ring geometry in the two rings, the corresponding dipoles must be exactly on top of each other, which means that, as seen by the beam, all dipoles are shifted in beam direction in one ring, and against beam direction in the other. All insertions, therefore, must match

from positive D_0' to positive D_0' in one ring, and from negative D_0' to negative D_0' in the other ring. This may require the 5 quadrupole strengths in the dispersion suppressor to be set somewhat different in the two rings, i.e. the two rings to have slightly different insertion optics.

This principal complication could be avoided by arranging the dipoles in every arc section symmetric with respect to the center of the section, shifting them upstream on one side and downstream on the other. Then, however, the periodic dispersions of the two half arcs would not match at the center since they would have opposite slopes $\pm D_0'$ at this point.

A trick to overcome this, in a lattice with 60° phase advance

per cell, was described in ref. 1) and is shown schematically in Fig. 1. It simply consists of shifting the two nearest dipole clusters toward the symmetry point by the same amount Δl that all other dipoles are shifted away from it. The symmetry point must be at the center of an F-quadrupole in this scheme. In spite of its elegance, the scheme has the disadvantage of leaving no room for a spool unit next to the F-quadrupole at the symmetry point.

Therefore, we have devised an alternative scheme which employs similar principles but uses correction dipoles in the spool units only. As shown in Fig. 2, the scheme employs, on either side of the symmetry point, a pair of added inward/outward deflections spaced 90° apart (3 half cells). Dispersion becomes matched at the symmetry point if each deflection is approximately that of a normal dipole with length $\Delta l = 2.59$ m (17.1 T·m at 20 TeV). The added bends are part of

the machine geometry along which the quadrupoles are aligned.

At each end of the arc, one half of the same scheme can be applied to make the slope of the dispersion zero there, which has the fundamental advantage that all interaction and utility insertions become like normal cells regarding their optical input and output boundary conditions. Both rings, then, will be made up of only 4 different units (arc, low beta insertion, medium beta insertion, utility insertion) that link to each other without further matching. (In this scenario, the inwardly bending correction dipoles ⊕ at the ends of the arc must be considered as part of the arc; they have only been shifted to the outer side of the quadrupole for lack of space on the inside. This essentially makes no difference and can easily be accounted for when matching the individual types of insertions.)

The added dipoles required in the scheme of Fig. 2 are rather

strong. We therefore propose the modified scheme shown in Fig.3 in which there are many deflections spread out over ± 9 cells and in which the interval between deflections is 180° in phase. As a result, they are smaller by a factor of 4. Their approximate bending strength at 20 TeV is 4.3 T·m which is about the bending strength projected for the spool units. An alternative technical realisation would be to create the added bends by making the adjacent cell magnet clusters 65cm shorter or longer, respectively, which for example means that each of the 5 magnets would be shortened or lengthened by 13cm.

The principles of functioning for the 3 schemes are sketched in Fig.4, where the dispersion entering the compensator with $D_0/-D_0'$ and leaving it with $D_0/+D_0'$ is shown schematically in phase plane. In the first half of the compensator, the unmodified periodic dispersion has a grossly constant amplitude D_0 and slope $-D_0'<0$, and the betatron oscillation due to the added dipoles is about this point in phase plane,

while in the second half of the compensator, the betatron oscillation is about the point $D_0/+D_0'$.

Summing up we find that the compensating scheme needs some technical effort but has the principal merit that both rings will have the same design optics, strictly.

Reference:

1) K. Steffen: "Note on HERA normal cell symmetry"
DESY HERA 83/13 (1983)

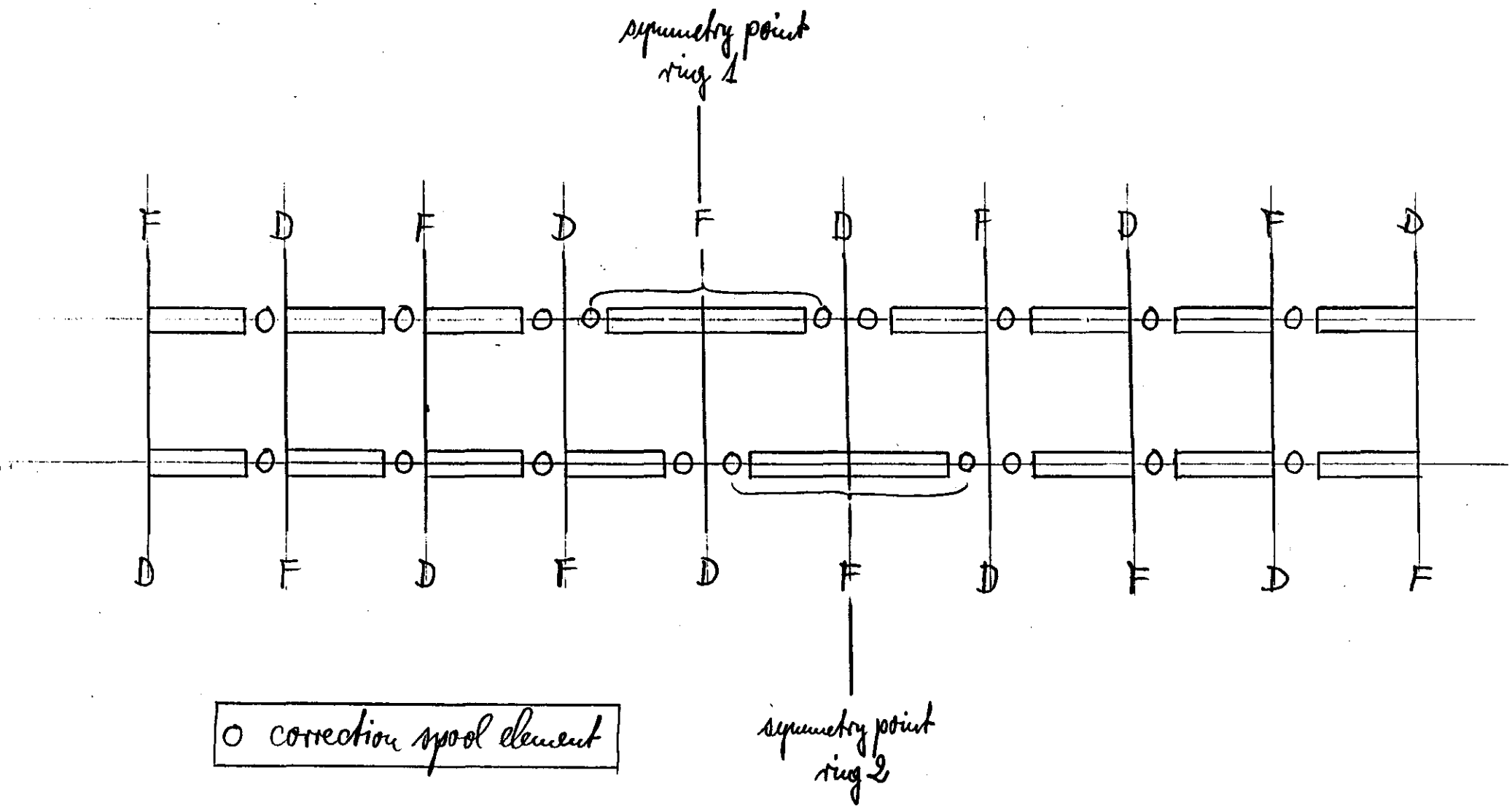

Fig. 1 Compensating scheme of ref. 1 for 60° cells

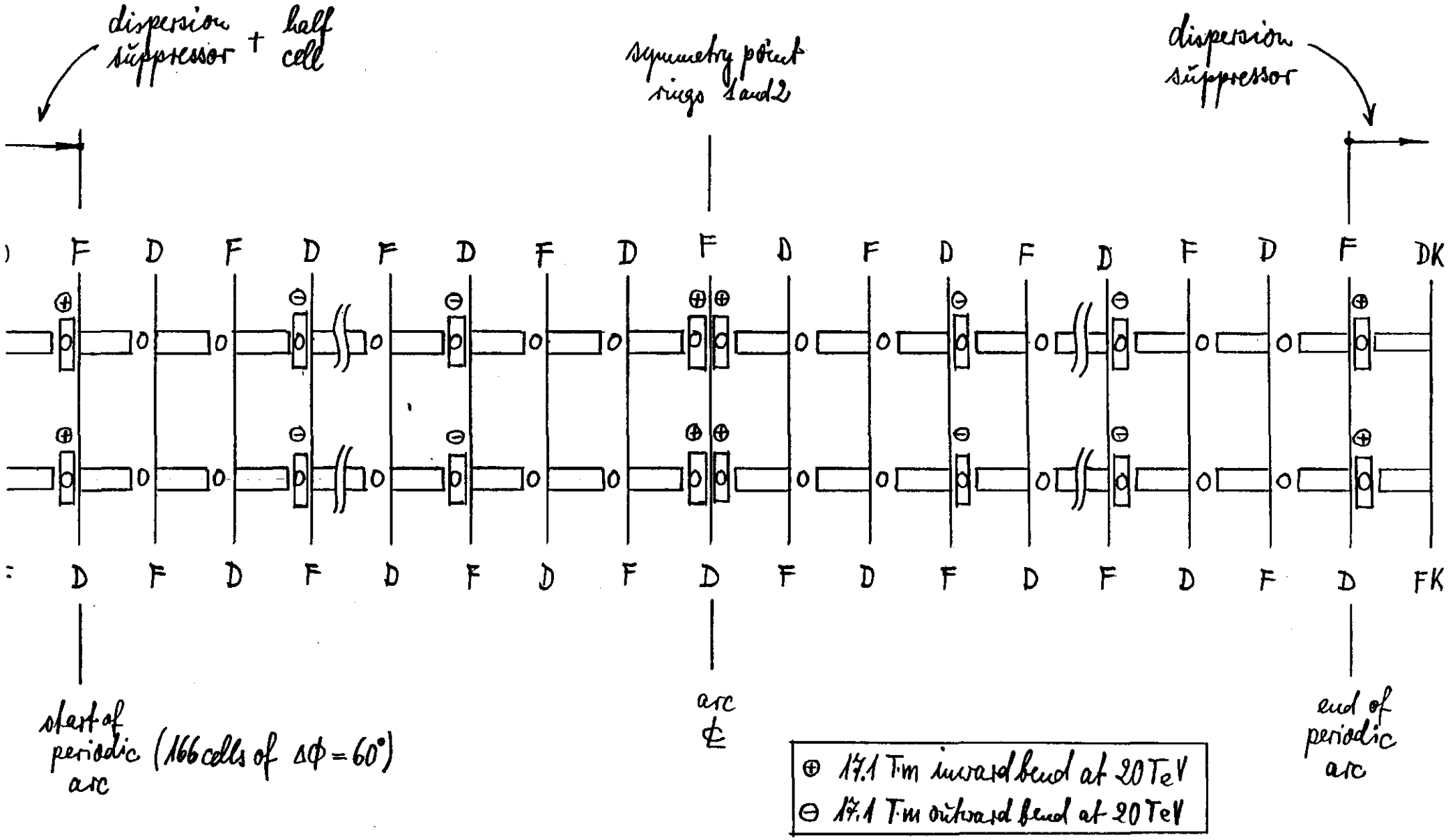

Fig. 2 Compensating scheme with added dipoles

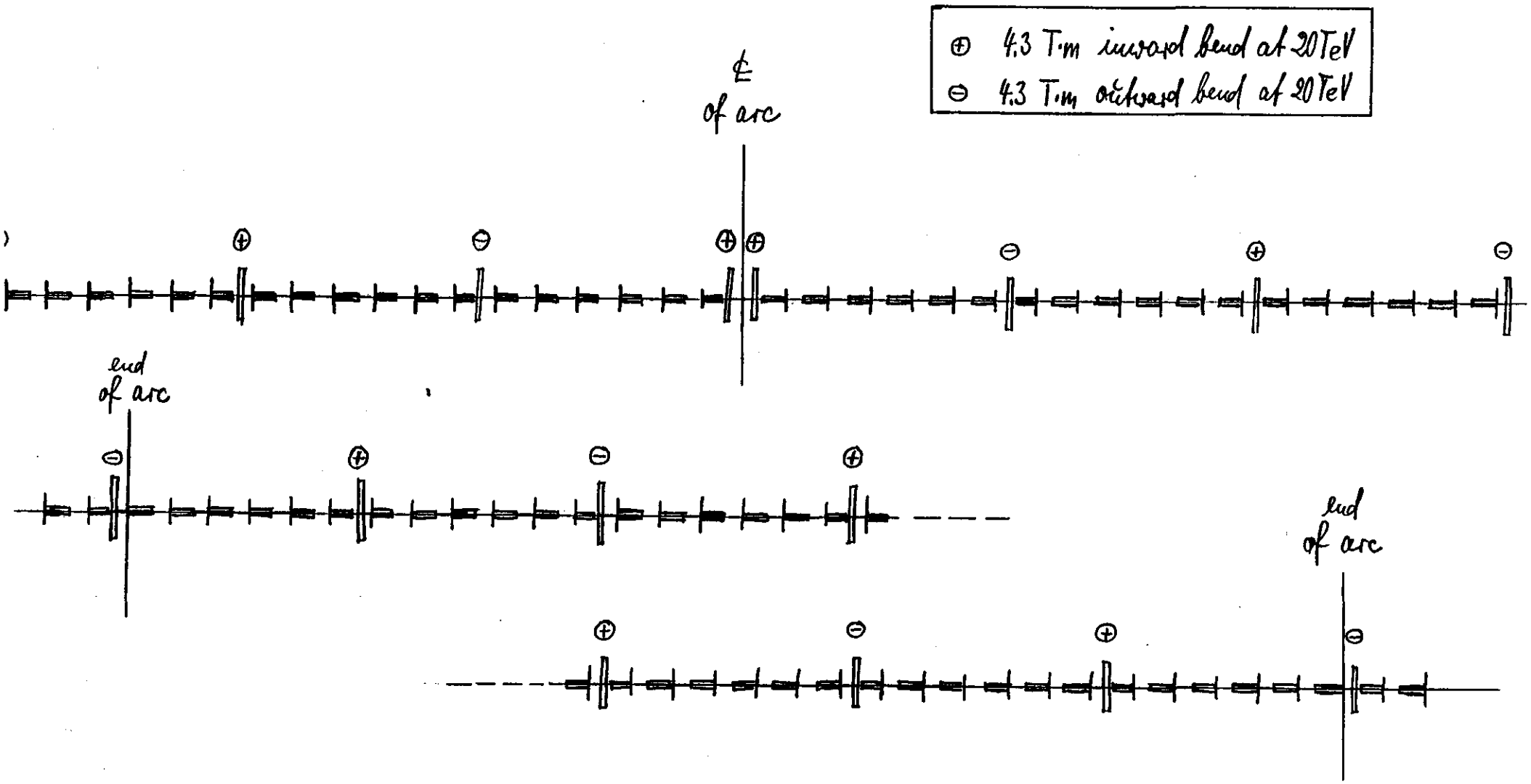

Fig. 3: Improved compensating scheme with added dipoles of reduced strength.

Scheme of Fig. 1

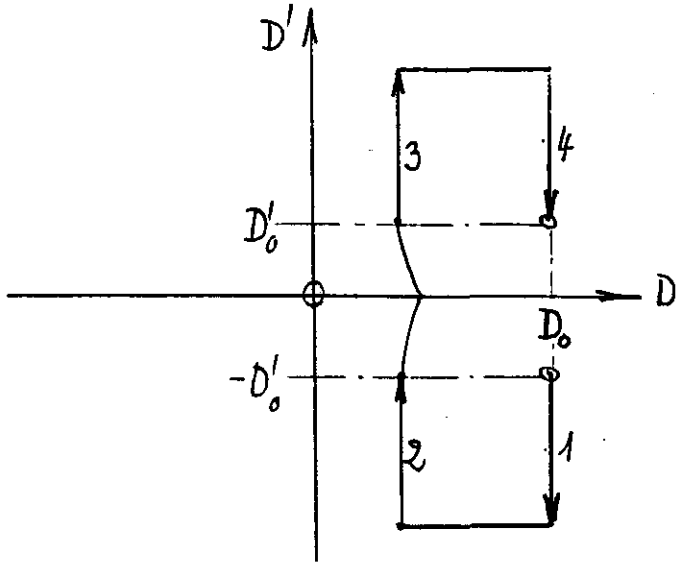

Scheme of Fig. 2

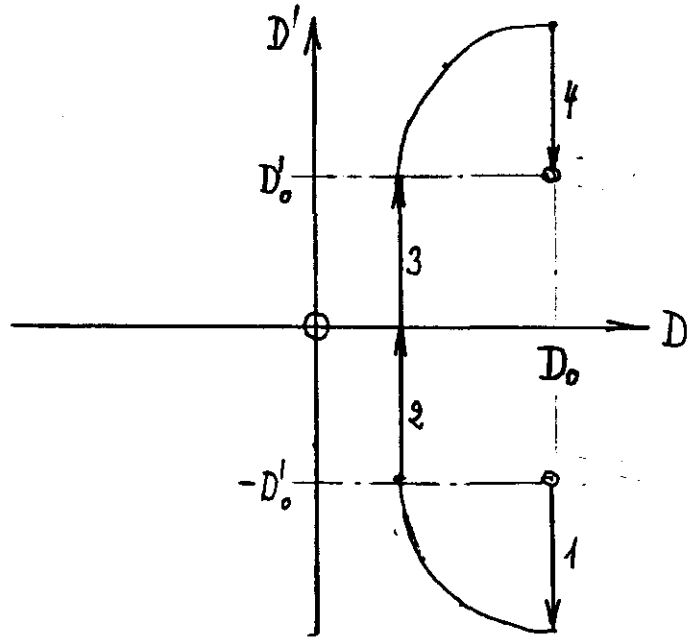

Scheme of Fig. 3

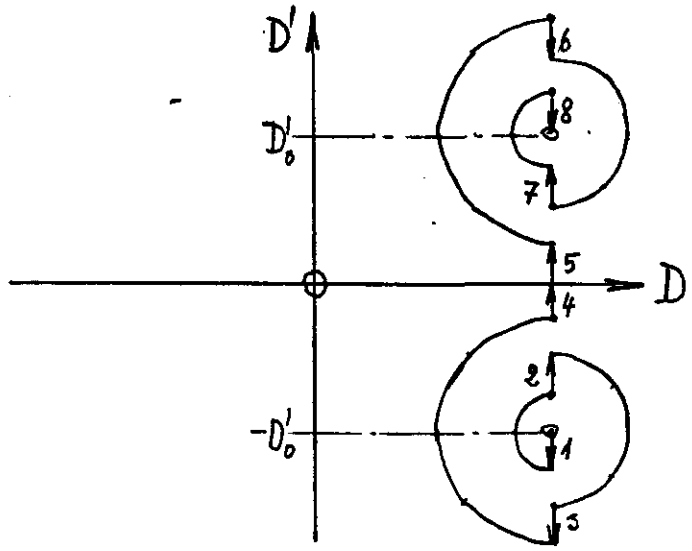

Fig. 4 Schematic phase plots of dispersion for the 3 schemes