SSC-N-102

CCI Report No. 559-101

REFRIGERATION SYSTEM FOR THE SSC
AN UPDATE

PREPARED UNDER P.O. NO. 92451 BY
CRYOGENIC CONSULTANTS, INC.
ALLENTOWN, PA

FOR

FERMI NATIONAL ACCELERATOR LABORATORY
BATAVIA, IL

August 29, 1983

I N D E X

Section	Title	Page No.
	INTRODUCTION	2
	CLAIMS MADE FOR THE PROPOSED SYSTEM	2
1	DESCRIPTION OF SYSTEM	3
2	PIPING INSIDE THE CRYOSTAT JACKET	7
3	HEAT EXCHANGER FOR REMOVAL OF RAMPING AND SYNCHROTRON HEAT	9
4	BEHAVIOR OF SYSTEM DURING A MAGNET QUENCH	9
5	LIQUID NITROGEN SHIELD SYSTEM	11
6	LIQUID AND GASEOUS STORAGE SYSTEMS	14
7	CONCLUSIONS	15
	APPENDIX A / Pressure Relief During Magnet Quench	A1-A3

REFRIGERATION SYSTEM FOR THE SSC
AN UPDATE

INTRODUCTION:

This report is an update of the work reported on in CCI Report No. 559-100 of August 15, 1983. Some modifications from the system described in 559-100 are proposed. These modifications have the purpose of simplifying the magnet construction. The major modification suggested in this report is the deletion of the two phase channel as part of the magnet cryostat. Heat from the single phase fluid will be removed in small exchangers located at regular intervals between magnet strings. This concept appears to be especially attractive for magnets with low synchrotron heating. Also, some consideration has been given to the non-steady state aspects of the system, such as cooldown and quenching of magnets. It appears feasible to delete warm piping installed in parallel with the accelerator and to handle magnet cooldown and limited quenching (up to 5-10% of a 2 km string) with cold piping installed inside the vacuum jacket.

It appears that the choice of 36 locations at 4 km intervals for refrigerators and auxiliary equipment is conservative. It is quite feasible to reduce the number to 24 or possibly less. There are a number of trade-offs to be made, such as increase in pipe sizes for various cryogenic fluids against a smaller number of liquefiers and auxiliary equipment of greater capacity. Typically, cost of cryogenic components is proportional to $(\text{size})^{.6}$. If a refrigerator costs one million dollars, a reduction to 24 units from 36 will reduce the cost for helium refrigerators from $\$36 \times 10^6$ to $\$30.6 \times 10^6$. All or part of the difference is available for increasing pipe sizes.

CLAIMS MADE FOR THE PROPOSED SYSTEM:

1) Greatly simplified construction of the magnet cryostats.

2) Elimination of the magnet bowing problem during cooldown.

3) Reduced power requirement for the refrigeration system.

4) Improved utilization of the refrigeration available in the liquid nitrogen used for shield cooling.

5) Preservation of refrigeration in case of a quench, resulting in faster reestablishment of the superconducting state of the quenched magnet.

6) Elimination of large diameter ambient temperature gas collection headers.

7) Elimination of liquid helium transfer line in parallel with the accelerator.

8) Fast cooldown through proper arrangement of components of the system.

1. DESCRIPTION OF SYSTEM:

1.1 Magnet System (See Figure 1):

It is proposed that the magnet cryostat only carries single phase liquid helium (streams 1, 2, 3, and 4) at a pressure of 2-5 ata. The direction of flow is away from the refrigerator station. The single phase flow turns around at the end of the string of magnets and separates into two streams. One stream becomes two phase flow (stream 5) at a pressure of approximately 1.2 ata (or lower if desired). It is used to remove heat from the single phase flow. This is accomplished in heat exchangers located between magnets. The distance between exchangers may be of the order of 100-300 meters. Two phase flow channels are not physically attached to the magnet cryostats.

The second stream becomes shield flow (stream 6) and intercepts all heat coming in from the environment. The pressure of this stream will be essentially that of the single phase flow in the magnets. Temperature rise of this stream may be as much as 15°K.

1.2 Cooldown of Magnet Strings:

Figure 2 shows valving and piping to be used for non-steady state conditions. Stream 1 (shield conduit) will carry helium gas at a pressure of 3-5 ata and a temperature of 80-85°K in reverse direction of the normal steady state flow direction. This gas is supplied by the refrigerator at a high rate. A small fraction of this gas flows through

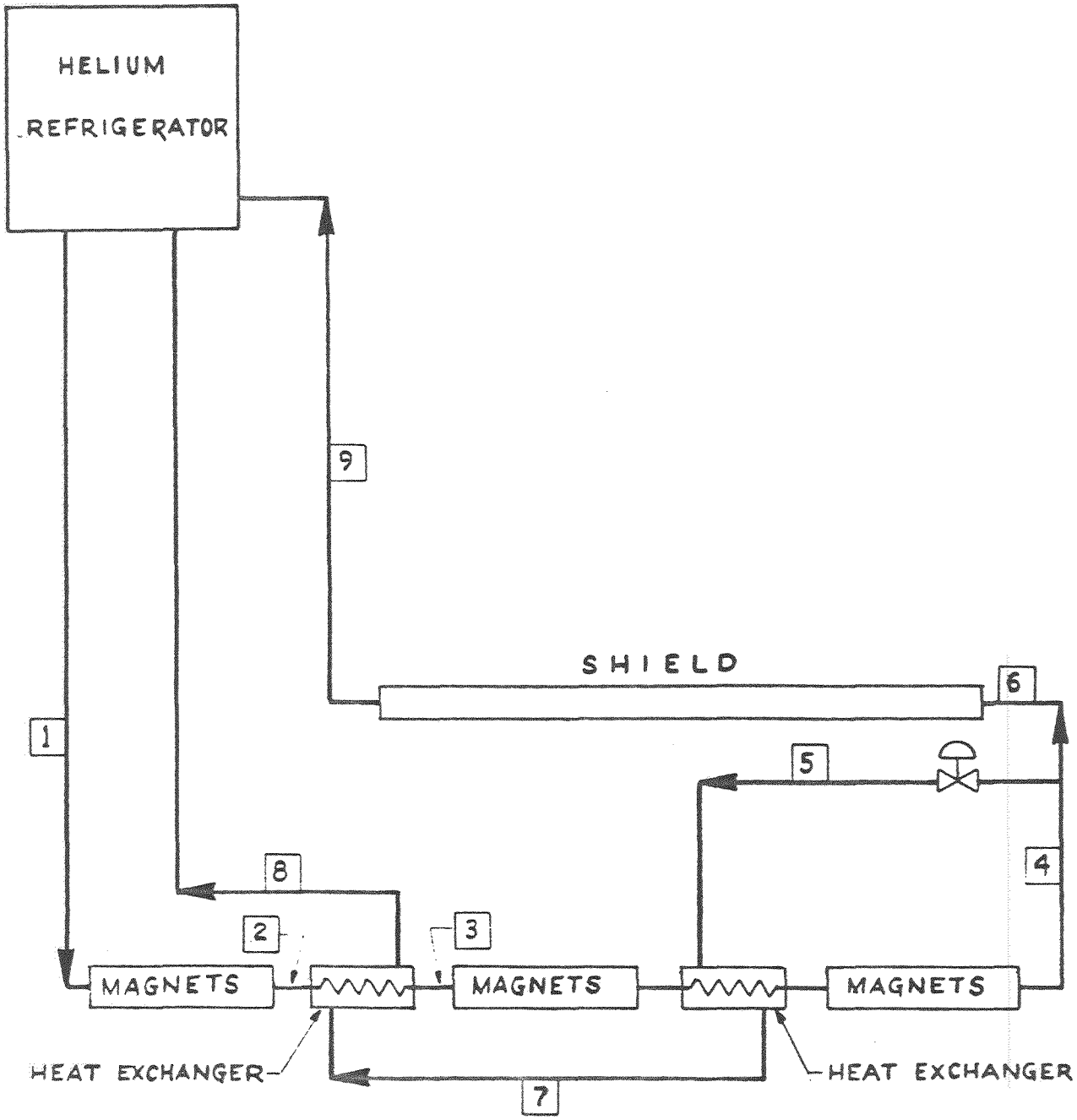

Helium Refrigeration Circuit

FIGURE 1

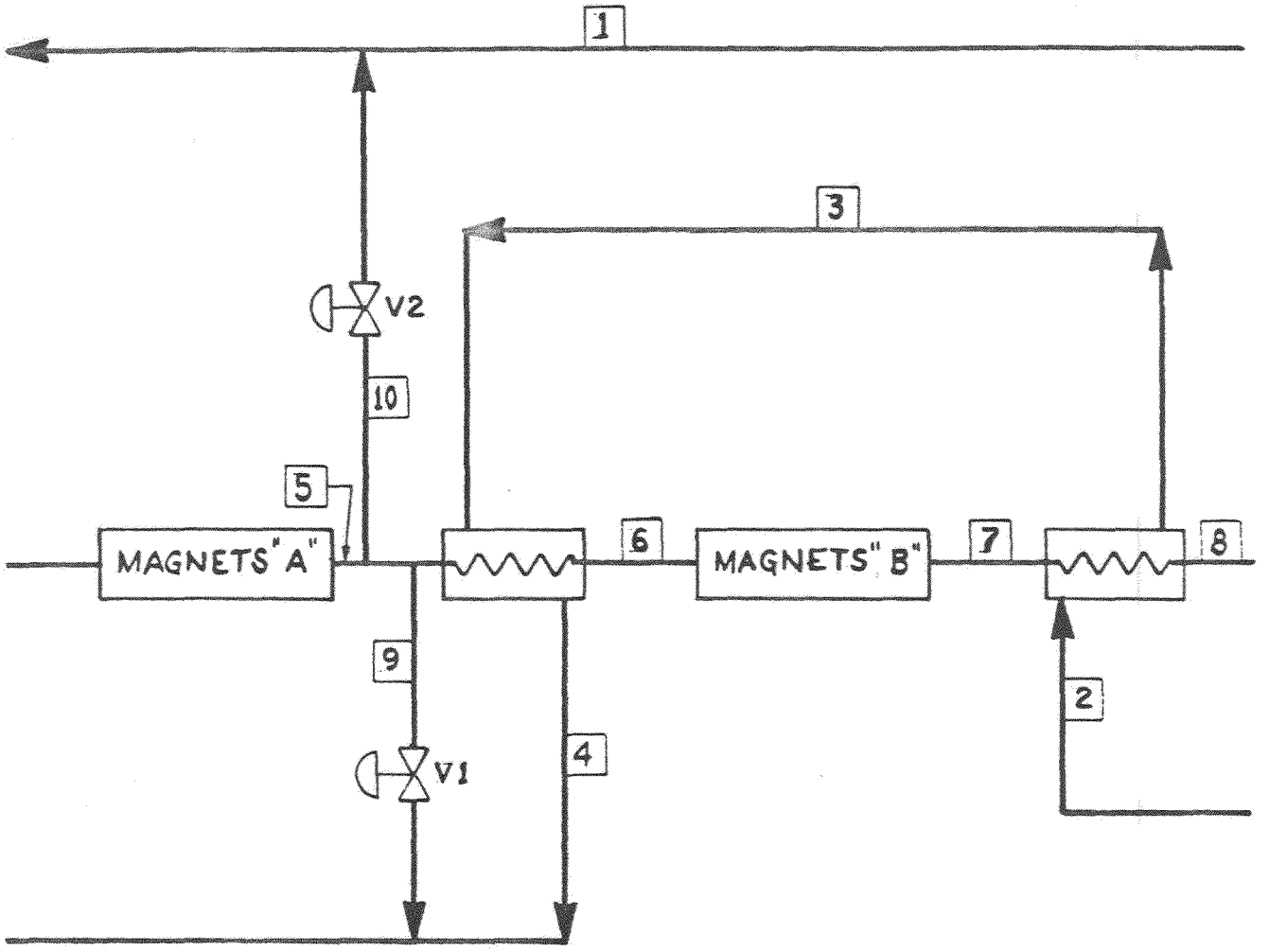

Helium Refrigeration Circuit for Use
During Magnet Cooldown and Quench

FIGURE 2

the magnets in reverse direction. The major fraction flows through the two phase circuit in the same direction as the normal flow direction.

Magnet cooling is now accomplished in "parallel" with a small stream per magnet (points 8, 7, 6, and 5 in order of flow direction). Streams 2, 3, and 4 cool the small stream in the heat exchangers. Table I provides an example of typical process points:

TABLE I

Point	Pres. ata	Temp. °K	Enthalpy J/gr	Flow Rate g/sec
1	3.5	80	430.9	40
2	3.5	80	430.9	35
3	3.5	110	586.8	35
4	3.5	135.8	720.4	35
5	3.4	145	768.6	5
6	3.4	300	1574.0	5
7	3.5	110	586.8	5
8	3.5	80	430.9	5

Figure 2 also shows bypass circuits. The single phase circuit connects to the two phase circuit through valve V1. Valve V1 may be opened during the magnet cooldown process dependent on relative flow rates and pressure drops. Valve V1 may also be opened in case of a magnet A quench. In that case, liquid helium is spilled from the quenching magnet into the two phase stream. Large amounts of refrigeration are saved. Towards the end of the quench, valve V1 would be closed, and valve V2 opened. The relatively warm gas in the quenched magnet then flows to the shield circuit. The temperature of the gas may be as high as 25°K, without diminishing the function of the shield.

2. PIPING INSIDE THE CRYOSTAT JACKET:

The proposed system has ducts for the following fluids:

a) Two phase helium flow at 4.4°K.

b) Shield helium flow between 4.5 and 10-15°K.

c) Insulation shield nitrogen flow at 75-85°K.

In order to carry the fluids in the above circuits (at the lowest pressure drop over the greatest distance between service station points), circular pipes are preferred. Pressure drop in piping is proportional to $(d_h)^{-4.8}$ where d_h is the hydraulic diameter of the pipe.

Comparing pressure drop in round ducts versus rectangular ducts shows the following relationship:

$$\frac{\Delta P_2}{\Delta P_1} = \left(\frac{X + 1}{X}\right)^{1.2} \left(\frac{X}{\pi}\right)^{.6}$$

Where: ΔP_1 = pressure drop in round duct.

ΔP_2 = pressure drop in rectangular duct

X = $\frac{L}{d}$ for the rectangular duct

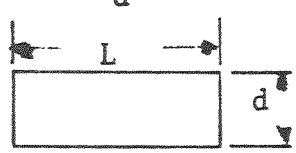

Table II shows the values of $\Delta P_1/\Delta P_2$ as a function of X:

TABLE II

X	1	2	3	4	5
$\Delta P_1/\Delta P_2$	1.115	1.241	1.372	1.511	1.645

All ducts are carried in parallel with the magnet and are supported independently and in thermal isolation from magnet, outer vacuum vessel, and each other. Since the magnet only carries single phase liquid and bore tubes, end connections between magnets during field installation have been greatly simplified. By installing a separate pipe for the two phase flow, it has become much easier to lower the pressure drop in this circuit. This, in turn, opens up the possibility of greatly increasing the distance between refrigerator stations. Also, lowering the temperature level of the two phase stream by .2 to .4°K becomes feasible and fairly cheap.

2.1 Pipe Diameters:

2.1.1 Single phase flow rate will be of the order of 30 g/sec. This stream will be carried in a 1 in. IPS, Schedule 5 pipe with a flow area of 1.10 sq in. (7.11 cm^2) and an internal diameter of 1.185 in. (3.0 cm). Pressure drop in this line is negligible.

2.1.2 Two phase flow rate will be of the order of 20 g/sec. This stream will be carried in a 2 in. IPS, Schedule 5 pipe with a diameter of 2.245 in. (5.7 cm) and a flow area of 3.95 sq in. (25.48 cm^2). At 100% liquid flow rate and 1.2 ata pressure drop in this pipe will be of the order of .16 psig per km of length. If pressure drop needs to be reduced, the next larger pipe (2-1/2 in. IPS, Schedule 5) will have an O.D. .5 in. larger and a pressure drop 2.5 times smaller than that of the 2 in. pipe.

2.1.3 Low temperature shield flow will be carried in a 2 in. IPS, Schedule 5 pipe. The flow rate will be 5-10 g/sec, dependent on the heat leak to the shield and the allowable temperature rise. This temperature rise is not critical and may vary by a factor 2-3 without affecting performance of the system much. Pressure drop in the pipe is of the order of .5 psig per km.

3. HEAT EXCHANGER FOR REMOVAL OF RAMPING AND SYNCHROTRON HEAT:

At this time, it is proposed to use a small amount of finned tubing, coiled on a 6 or 8 in. pipe. The single phase fluid will flow through the tube while the two phase fluid will flow over the fins. The length of the exchanger will not exceed 18 in. It is permissible to carry the electrical leads through a parallel tube bypassing the exchanger, as long as this tube has a high impedance relative to the coiled tube used for heat transfer. The heat exchanger will have a very small pressure drop for normal steady state flow. However, if a quench occurs, flow rates from the quenching magnet become very large during a very short period of time. The heat exchanger will have a substantial pressure drop for the quenching flow and, as a result, the pressure in the quenching magnet will rise relative to its neighbors.

This rise in pressure or other signals may be used to open bypass valves from the single phase stream to the two phase and shield flow streams and empty the single phase system of the quenching magnet. Because of the high pressure drop in the heat exchanger, coupled with an inventory of single phase liquid, the quench will not propagate to the next magnet because of transfer of warm liquid helium. Figure 4 shows a potential arrangement of the heat exchanger.

4. BEHAVIOR OF SYSTEM DURING A MAGNET QUENCH:

It is assumed that a 100 meter long magnet quenches and that distance between refrigerators is 4 km. In that event, the two phase and shield pipe contain volumes of 5,100 liters each for a length of 2 km. It is assumed that 100 meter of magnet contains 193 liters of liquid in flow areas and between laminations of the iron. During a quench essentially all of this fluid will be expelled from the magnet.

It is proposed that the single phase circuit be opened to the two phase circuit initially and near the end of the event to the shield flow circuit. The bulk of the fluid in the single phase circuit will leave before a large amount of heat has been added to the fluid. This fluid, when expanding into the two phase system, will

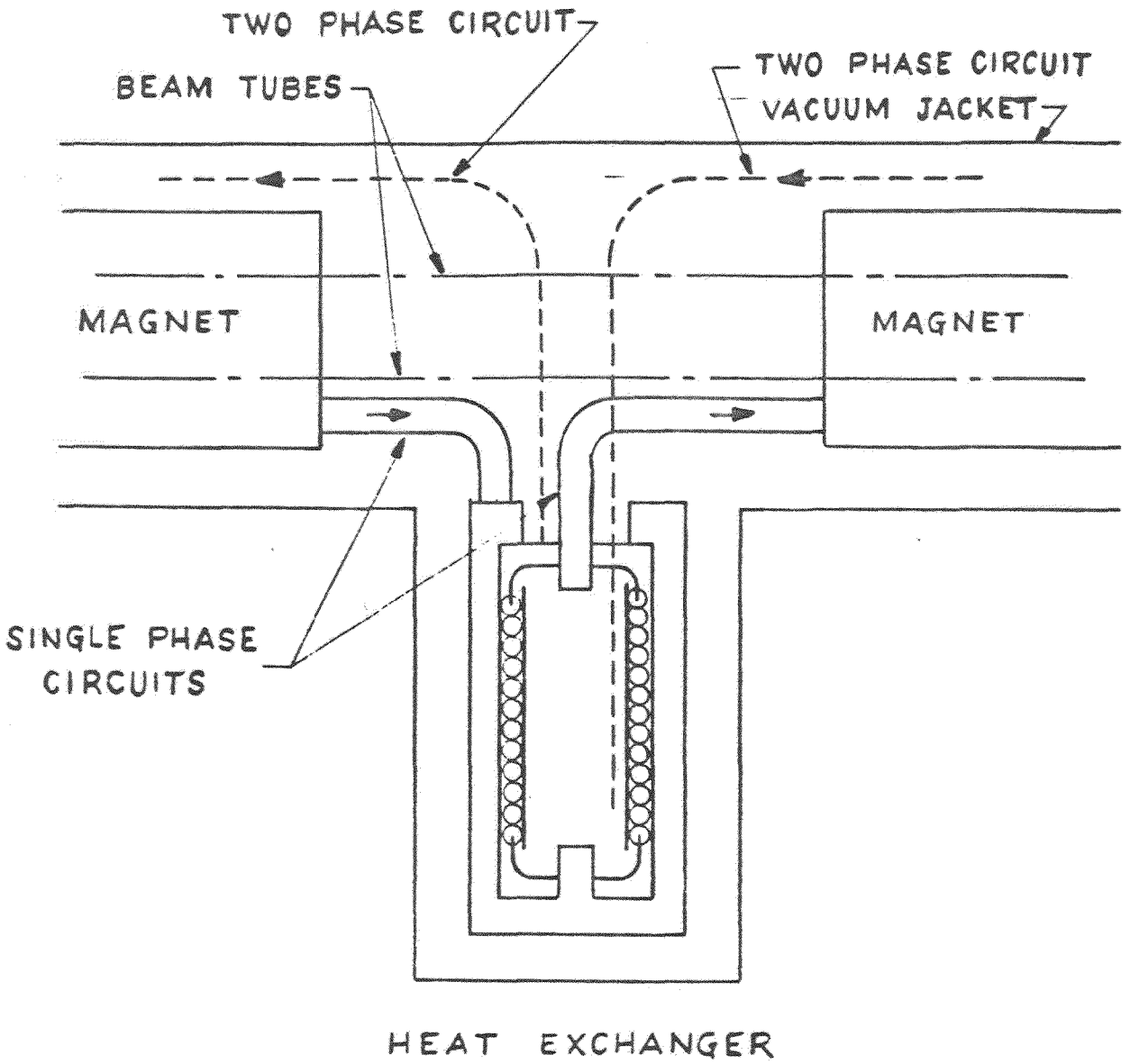

Arrangement of Heat Exchanger between Magnets

FIGURE 4

become a mixture of liquid and gas at the pressure of the two phase system. To make room for the additional mass, some pressurization occurs in the two phase system, and the boiling point of the fluid will be raised. There is no first order effect of this on the single phase fluid of all the magnets of the string.

The total stored energy of the superferric magnets is fairly low, and when all of the energy of the magnet has been stored in the windings, iron, and fluid, a final average temperature of some 20-25°K has been reached. Fluid of this temperature may be dumped in the shield system because even a 25°K shield system will pass only very small amounts of heat to the magnet system.

The pressure rise of the two phase fluid system and that of the single phase system will not be very high as long as we can limit the venting of heated fluid to one or two magnets out of the string (roughly 5-10% of the total mass). (See Appendix A.) Reestablishing the superconducting state of the quenched magnet may be achieved by flowing liquid helium into the magnet and by passing the vapor downstream of the magnet to the shield flow system.

The cold piping systems are used to temporarily store the excess fluid. The refrigerator compressor will remove this fluid and some of it will be discharged to a gas storage facility after refrigeration has been extracted from it.

5. LIQUID NITROGEN SHIELD SYSTEM:

It is proposed that liquid nitrogen be carried as subcooled liquid under pressure in the shield system (CCI Report 559-100 dated August 15, 1983). Figure 5 shows the flow schematic of the proposed system. There are four liquid nitrogen plants located at 90° intervals around the ring. The liquid nitrogen plants are air separation plants which take in air from the environment and generate liquid nitrogen. These plants are standard commercially-available plants. Each plant produces some 25-30 tons per day of liquid nitrogen at a pressure of approximately 5-6 ata.

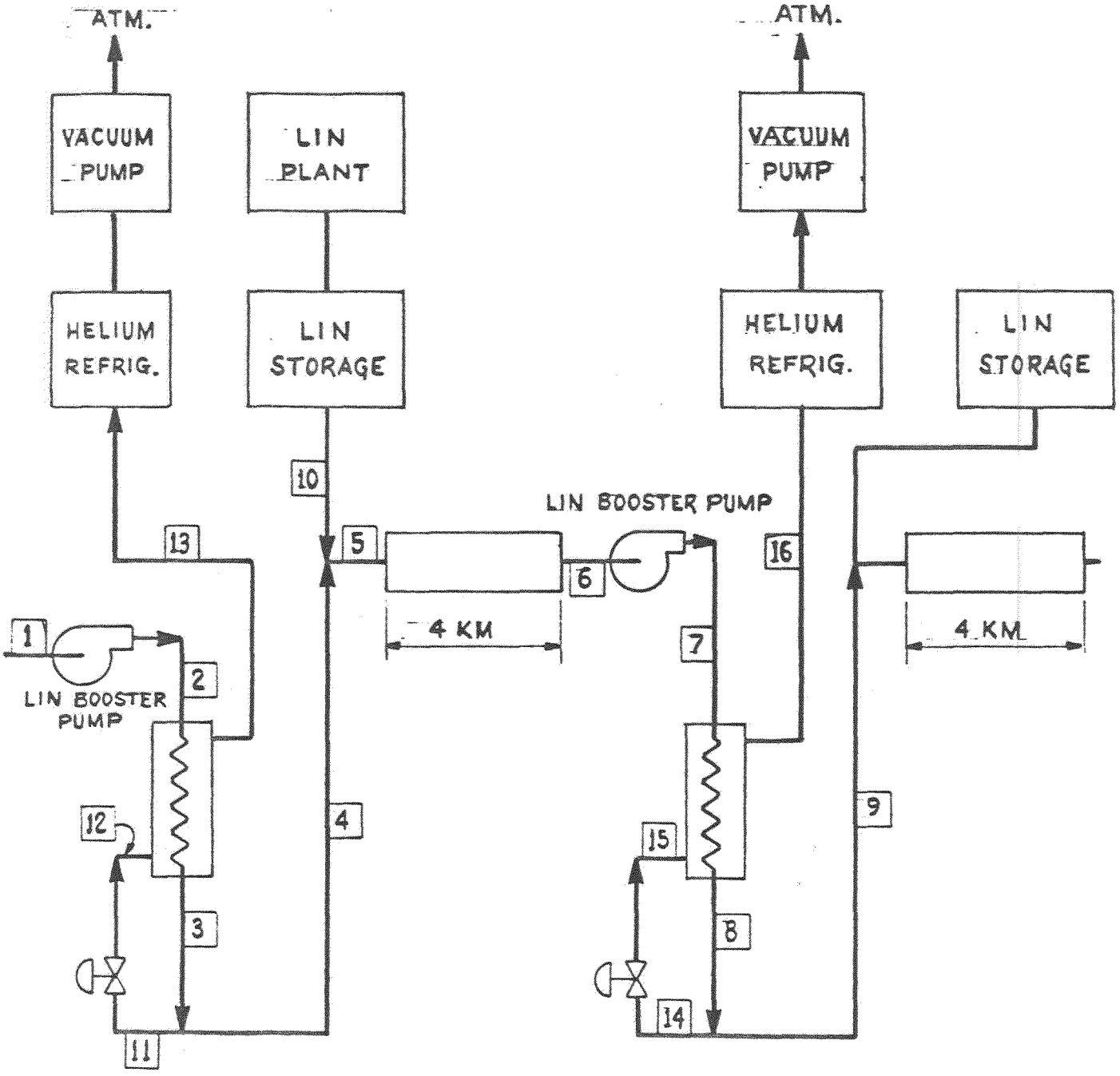

Schematic Nitrogen Refrigeration System

FIGURE 5

Liquid flow rate at point 5 is some 450 gr/sec while stream 4 is some 190-230 g/sec. Stream 10 is the production of the air separation plant. Largest pressure drop occurs in the first section of 4 km length. The 1-1/2 in. IPS, Schedule 5 line will have a pressure drop of 3.2 psig per km for a flow rate of 450 g/sec. The liquid nitrogen pump boosts stream 6 from 4 to 5 ata pressure. The subcooler removes 4,400 W from stream 7, and stream 9 continues as subcooled liquid to the next string of magnets.

Table III provides process points of Figure 5:

TABLE III

Point	Pressure ata	Temp. °K	Enthalpy J/gr	Flow Rate g/sec
1	4.5	85	45.3	200
2	5.0	85.1	45.5	200
3	5.0	75	24.81	200
4	5.0	75	24.81	178
5	5.0	78	30.81	428
6	4.0	83	41.09	428
7	5.0	83.1	41.35	428
8	5.0	75	24.81	428
9	5.0	75	24.81	392.6
10	5.0	80	35.09	250
11	5.0	75	24.81	22.0
12	.5	71.9	24.81	22.0
13	.5	72.5	224.81	22.0
14	5.0	75	24.81	35.4
15	.5	71.9	24.81	35.4
16	.5	72.5	224.81	35.4

The booster pumps generate flow rates of 4 to 8.5 gpm. These are small pumps. Reciprocating pumps with variable speed drives may be used to match the required throughput with the location. Failure of a single pump will not stop the system because the pump upstream will easily generate the required pressure to drive the liquid through 8 km of pipe.

6. LIQUID AND GASEOUS STORAGE SYSTEMS:

6.1 Liquid Helium Storage:

Total inventory of the magnet system is of the order of 400,000 liters of liquid. This divides as follows:

Single Phase System:	180,000 liters
Two Phase System:	130,000 liters
Shield System:	90,000 liters

It seems appropriate to divide the total system into vacuum tight compartments so that loss of vacuum will not result in loss of all or most of the liquid.

We assume that each of the refrigerator stations will have its own storage tank capable of holding at least 1.5 times the system inventory. Tank size is then of the order of 16,000 to 17,000 liters or 4,000 to 4,500 gallons. If two 1,500 liter per hour helium plants are employed, two storage tanks of possibly 10,000 to 12,000 gallon capacity will be provided at each of the liquefier locations.

6.2 Liquid Nitrogen Storage:

The shield line will contain approximately 225,000 liters (60,000 gallons) of liquid nitrogen. Air separation plant capacity of 100 tons/day translates into 4,740 liters/hour of liquid nitrogen production. Each one of these plants will have a storage tank with a capacity of 30,000 gallons, representing 24 hours of plant operation.

Each of the helium refrigerator stations may have a liquid nitrogen storage tank of small capacity to provide some local flywheel capability. A 1,000 gallon tank would provide shield cooling for a period of 36 hours.

6.3 Gaseous Helium Storage:

System upsets, such as quenching, result in a temporary excess load on the helium refrigeration system. This results in a change of liquid inventory into gaseous inventory. If we assume that a quench results in the vaporization of 1,000 liters of liquid helium, a gaseous storage volume of 1,500 gallons at 16 ata will be large enough to hold this mass at ambient temperature. It appears that each helium refrigerator should have a helium gas storage tank of some 2,000 gallon capacity. Typically, propane tanks can serve for this purpose.

7. CONCLUSIONS:

The proposed refrigeration system promises to achieve the following significant results and advantages:

1) Warm collection headers for helium gas, running in parallel with the accelerator, may be eliminated.

2) Construction of the magnet cryostat has been simplified greatly through deletion of two phase flow channels.

3) Pressure drop of two phase fluid may be decreased to a low value.

4) There is no need for a separate liquid helium transfer line in parallel with the accelerator.

5) There is no need for nitrogen gas collection headers.

6) Refrigeration available in the cold nitrogen vapor of the shield system will be used in the helium refrigerators.

7) Power required for the refrigeration system has been reduced substantially.

APPENDIX A

PRESSURE RELIEF DURING MAGNET QUENCH

During magnet quench, energy is released into the 1 Ø helium stream causing the liquid to vaporize and, hence, raise the pressure. In order to limit this pressure rise, relief must be provided. Calculations were performed to determine: 1) the energy removed by the 1 Ø stream during pressure relief as a function of the temperature increase of that stream, and 2) the volume of helium which must be removed as a function of the temperature of the 1 Ø stream in order to maintain a constant pressure of 3.5 ata in the 1 Ø stream.

The calculations were performed as follows:

1) Normal operating conditions of the 1 Ø stream are:

$P = 3.0$ ata

$T = 4.6°K$

$V = 193{,}000$ cc (LHe volume in 1 Ø stream per magnet)

$h = 11.97$ j/g

$V_s = 7.859$ cc/g

$\dot{m} = 24{,}560$ gms (LHe mass in 1 Ø stream per magnet)

2) The conditions at which pressure relief occurs during quench are:

$P = 3.5$ ata

$T = 4.71°K$

$V = 193{,}000$ cc

$h = 12.65$ j/g

$V_s = 7.859$ cc/g

$\dot{m} = 24{,}560$ gms

3) Pressure in the 1 Ø stream remains constant at 3.5 ata during pressure relief.

4) The mass of helium to be expelled from the system to maintain a constant pressure of 3.5 ata in the 1 Ø stream was calculated for temperature increments of 0.1°K up to T = 6.0°K. Thereafter, temperature increments of 0.5°K were used up to T = 20°K. At 20°K, 93.3% of the mass present in the 1 Ø stream at the initiation of pressure relief has been vented.

5) The quench energy taken up by the 1 Ø stream as a function of its temperature was calculated for the same temperature increments as in 4). The results are plotted in Figure A-1.

6) The helium at 3.5 ata will be vented into either or both of the following:

   -The 2 Ø stream at 1.2 ata, or

   -The shield stream at 3.0 ata.

   Initially, release will occur into the 2 Ø (1.2 ata) stream. The vented helium from the 1 Ø stream will, after pressure letdown to 1.2 atm, be a two-phase stream at 4.42°K. At the point where the stream becomes 100% saturated vapor (h = 29.92 j/g), the vent will switch to the shield stream at 3.0 ata.

7) The pressure increase in the 2 Ø stream during pressure relief was calculated as a function of temperature in the 1 Ø stream. At 3.5 ata and 6.17°K, the helium vented to the 2 Ø stream is saturated vapor and, the release is transferred to the shield stream. At this point, 440,000 cc (14,130 grams) of helium have been vented into the 2 Ø stream. This results in a pressure increase in the 2 Ø stream from 1.20 ata to 1.32 ata.

8) The shield stream operates at 3.0 ata pressure. During release into this stream, the pressure will rise. Approximately 458,000 cc (8,770 gms) of helium will be vented to the shield stream between the time (1) the release is transferred from the 2 Ø stream to the shield stream until (2) the temperature in the 1 Ø stream reaches 20°K. At this point, the shield stream pressure will be 3.3 ata.

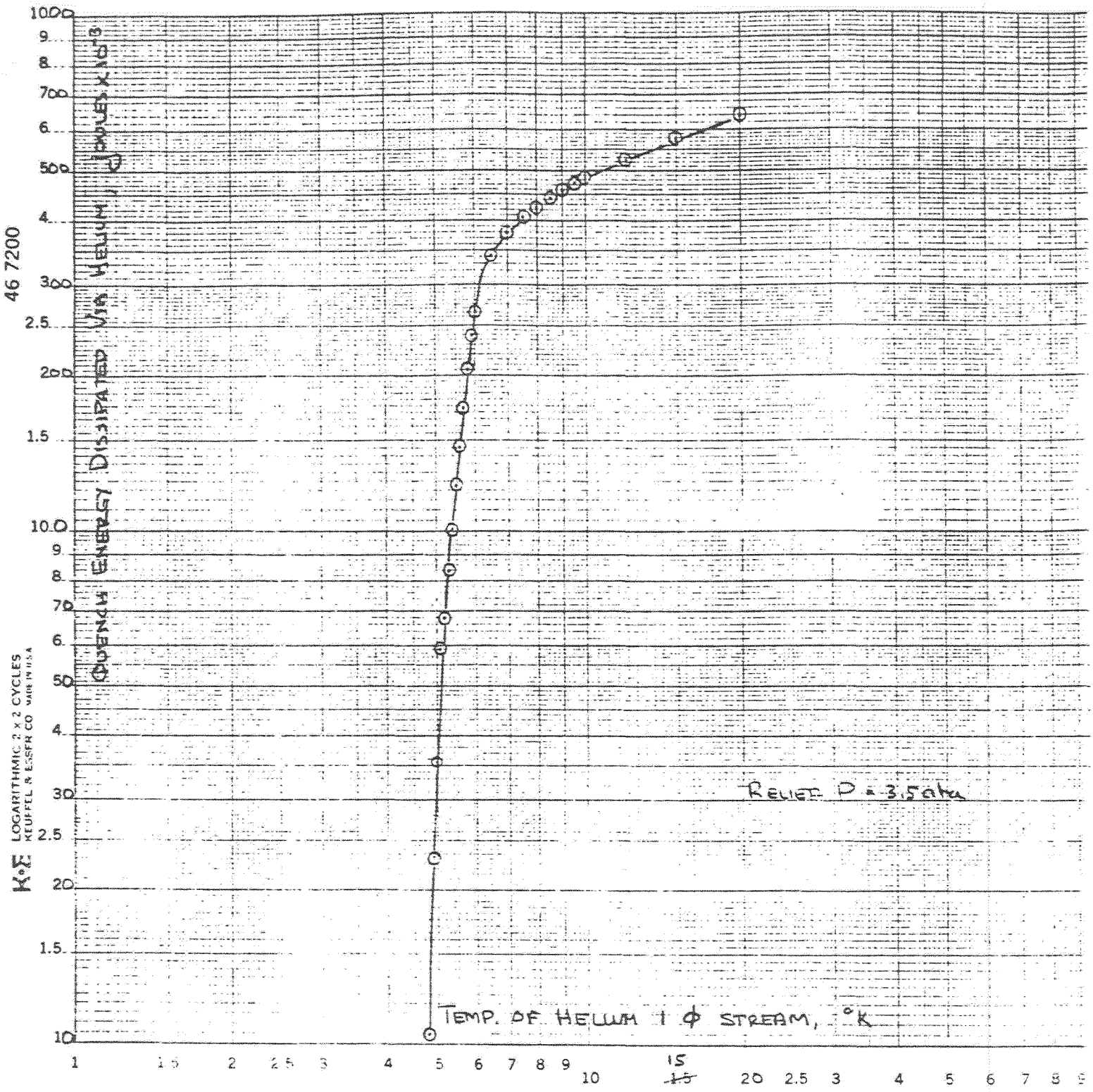

QUENCH ENERGY DISSIPATED VIA HELIUM, JOULES x 10^-3
TEMP. OF HELIUM 1 φ STREAM, °K
RELIEF P = 3.5 atm
46 7200
K+E LOGARITHMIC 2 x 2 CYCLES
KEUFFEL & ESSER CO. MADE IN U.S.A.

FIGURE A-1