SSC-N-101
CCI Report No. 593-102
SSC/CRYO 6

REFRIGERATION SYSTEM FOR "NO-IRON" 5 T MAGNETS FOR THE SSC

PREPARED UNDER P.O. NO. 94362 BY
CRYOGENIC CONSULTANTS, INC.
ALLENTOWN, PA

FOR

FERMI NATIONAL ACCELERATOR LABORATORY
BATAVIA, IL

December 1, 1983

I N D E X

Section	Title	Page No.
	LIST OF TABLES	iii
	LIST OF FIGURES	iv
	LIST OF DRAWINGS	v
1	INTRODUCTION	2
2	ASSUMPTIONS	2
3	DESCRIPTION OF THE PROPOSED ARRANGEMENT	3
4	FLOW SHEETS AND PROCESS POINTS OF THE HELIUM AND NITROGEN SYSTEMS	7
5	HEAT LOADS OF THE SYSTEM	12
6	POWER REQUIREMENTS OF THE REFRIGERATION SYSTEM	16
7	PRESSURE DROPS	17
8	HELIUM REFRIGERATION PROCESS	19
9	REDUCTION OF TEMPERATURE OF THE MAGNETS	24
10	HANDLING OF A QUENCH	25
11	MAGNET COOLDOWN	25
12	REPLACEMENT OF A MAGNET	27

LIST OF TABLES

Table	Title	Page No.
I	PROCESS POINTS FOR 1,800 M OF MAGNETS	9
II	PROCESS POINTS FOR 1,800 M OF MAGNETS WITH CIRCULATING AND COLD GAS PUMP	9
III	PROCESS POINTS FOR LIQUID NITROGEN SYSTEM	10
IV	WEIGHT OF LIN COOLED SHIELD (LBS)	12
V	HEAT LOADS PER METER OF MAGNET LENGTH IN WATTS	15
VI	POWER REQUIREMENTS OF THE SYSTEM	16
VII	LIQUID HELIUM PUMP PERFORMANCE	18
VIII	PROCESS POINTS	22

LIST OF FIGURES

Figure	Title	Page No.
1	FLOW SHEET OF HELIUM SYSTEM	8
2	LIQUID N_2 COOLED SHIELD FLOW SYSTEM	11
3	HEAT EXCHANGER ARRANGEMENT	20
4	HELIUM REFRIGERATOR PROCESS	21

LIST OF DRAWINGS

Drawing No.	
7524-E	CRYOSTAT, 5 T MAGNET WITHOUT IRON
7525-E	MAGNET TO MAGNET CONNECTION, 5 T MAGNET WITHOUT IRON
7526-E	MISCELLANEOUS SUPPORT DETAILS, 5 T MAGNET WITHOUT IRON

REFRIGERATION SYSTEM FOR "NO-IRON"
5 T MAGNETS FOR THE SSC

1. INTRODUCTION:

As a first appraoch, the Fermilab magnet of the Tevatron will be used. Modifications will be made in order to improve the heat leak and heat transfer between single phase and two phase helium. It has been assumed that it is not absolutely necessary to enclose the magnet vessel with the two phase fluid channel.

The basic system for cooling the magnet is that of the Tevatron with the following proposed modifications:

a) Two phase helium may flow in a separate pipe to improve magnet cryostat construction and to reduce overall pressure drop of the two phase circuit.

b) An intermediate temperature shield cooled by helium will surround the magnet. This shield will operate in a temperature range of 4.5 to 15°K.

c) A liquid nitrogen cooled shield will surround all of the cold system. The cooling will be carried out by single phase liquid nitrogen. This liquid nitrogen is returned to the refrigeration station and recooled and repumped. If it is desired to reduce shield temperature, vacuum pumping of the nitrogen vapor may be done.

d) The single phase liquid helium flow rate in the magnets may be increased by separating liquid from gaseous helium of the two phase stream and pumping this liquid into the single phase stream flowing to the magnets.

2. ASSUMPTIONS:

2.1 Synchrotron heating is 20 kW for two rings of magnets or .116 W/meter per ring.

2.2 Length of ring (magnets) is 86.4 km.

2.3 There are 24 refrigeration stations located around the ring at 3.6 km intervals.

2.4 Heat load from ramping has been assumed to be 100 Joules per meter per ring. It has been assumed that a ramp occurs over a period of 15 min.

2.5 System cooldown will be accomplished by returning warm helium through a warm return header running in parallel with the ring.

2.6 Liquid nitrogen will be generated in at least four air separation plants located at equal intervals along the ring.

2.7 Liquid helium for cooling leads will be generated in liquefiers at two or more locations around the ring. A total of 3,000 ℓ/hr will be supplied. Liquid nitrogen consumption for generation of liquid helium will be .6 liter per liter.

2.8 Power requirements will be as follows:

Liquid Helium:	.83 kWh/ℓ
Liquid Nitrogen:	1,125 kWh/ton
Helium Refrigeration @ 4.5°K:	.329 kW/Watt
N_2 Refrigeration @ 80°K:	.01375 kW/Watt

3. DESCRIPTION OF THE PROPOSED ARRANGEMENT:

Drawing 7524-E shows the cross section of the magnet within its heavy vacuum wall of 1 in. wall thickness. The magnet is surrounded by the 10°K shield which consists of a 6 in. OD, .065 in. wall tube and a 6 in., Schedule 5 (.109 in. wall) pipe. There are penetrations through this shield to accommodate the support system of the magnet. The 10°K shield itself is supported by means of six 1/8 in. stainless steel rods.

The two phase helium return line is located between 10°K shield and liquid nitrogen cooled shield. This is done for convenience sake since heat leak to this pipe (approximately 2 in. in diameter) can be kept to 15 W or less for an 1,800 meter long string.

The liquid nitrogen cooled shield system consists of a 1 or 1-1/2 in. IPS stainless steel line carrying liquid nitrogen from the refrigerator station to the end of the string without making much thermal contact with the shield. The liquid nitrogen is then returned through a 1-1/2 in. IPS, Schedule 5 stainless steel pipe located centrally above the magnet. This pipe is in good thermal contact with the copper shields. The detail of this construction is shown on Drawing 7524-E.

The copper sheets of the shield are relatively short and are draped over the stainless steel pipes. Individual shield sections need not be joined to each other. At the bottom both sides of the shield are joined by means of a few mechanical rivets or equivalent. Because of the thickness of the shield, the bottom part can essentially be shaped by hand. This will facilitate installation.

The superinsulation is draped over the shield in two blankets of 30 layers each. These blankets may be prefabricated. At assembly, the bottoms overlap by some 4-6 in. It is obvious that installation of the blankets is not critical and can be carried out in a short period of time.

It should be noted that the copper shield is not circular. This reduces surface area some. However, care needs to be exercised that the shield does not come in contact with 10°K shield or two phase helium pipe.

Heat is transferred from the shield to the liquid nitrogen along approximately 30-50% of its length. It is important to obtain good thermal contact between shield and liquid nitrogen flowing in the stainless steel pipe. With a heat flux of approximately 10 W per magnet, temperature increments are as follows:

1)	Shield proper- - - - - - - - - - - - - - - - - - -	.57°K
2)	Conduction through stainless steel pipe- - - -	.10°K
3)	Transfer to liquid nitrogen- - - - - - - - - - -	1.54°K
	TOTAL- - - - - - - - - - - - -	2.21°K

This number is based on a construction consisting of direct soldering of copper shield to the pipe. In order to lower the temperature difference, it is necessary to provide a larger surface area for heat transfer to the liquid nitrogen. Drawing 7524-E shows a detail which reduces the temperature difference between shield and liquid nitrogen to a small number.

Drawing 7525-E shows a concept of magnet to magnet connection. Obviously, other arrangements are possible.

Drawing 7526-E shows a number of concepts for the support system. The drawing shows that the magnet is supported independently from the 10°K shield system and two phase return line. The magnet is directly supported from the vacuum vessel by means of five hangers. At each hanger location a rod hangs from the bottom of the magnet. The combination of the two allows the following:

a) Lowering and raising of the magnet.

b) Lateral movement of the magnet.

c) Rotation of the magnet by a few milliradians without breaking the vacuum of the insulation space.

In addition to the above features, the support system of magnet, 10°K shield, two phase helium line, and liquid nitrogen cooled shield has been designed to allow telescoping the complete assembly into the heavy-walled vacuum jacket. Once located, the support system will be finished from the outside of the vacuum vessel.

The overall arrangement as shown does solve a number of problems, as follows:

a) Liquid nitrogen cooled shield.- Fastening of the shield to the pipe carrying liquid nitrogen through a copper plate, silver brazed to the pipe, eliminates large temperature increments at various interfaces and provides for extreme flexibility of the shield during non-steady state conditions. For instance, bowing of the shield system during cooldown does not appear to be a problem.

b) Carrying liquid nitrogen to the end of the magnet string permits operation of the 1,800 meter long section independent of adjacent sections. At the same time liquid nitrogen may be carried over a great distance, without cooling, from centrally located air separation plants. To overcome downtime of a section located away from the air separation plant, local liquid nitrogen storage tanks will provide flywheel capability.

   Locating liquid nitrogen subcoolers at the helium refrigerator stations permits complete use of all refrigeration available in the liquid nitrogen.

c) 10°K shield system consisting of coaxial pipes or tubes provides uniformity of shield temperature and does not depend on conduction of heat through great lengths of metal. The independent suspension of the 10°K from the magnet removes at least one set of tolerances for the accurate positioning of the magnet. By employing a 10°K shield, two phase flow can be reduced to a minimum. This saves power in the refrigeration system, and it allows lowering of the magnet temperature at a relatively small increase in refrigeration power.

d) Cryogenic quench stoppers may be provided at any desired interval. These devices consist of single phase liquid helium inventories which get displaced in a finite time of seconds or even minutes, when so desired. The quench stoppers at the same time provide the heat transfer between single and two phase flow.

e) The circular two phase flow pipe can be sized for very low pressure drop over a length of 1,800 meters. This then provides the capability to lower the magnet temperatures by as much as 1°K through pumping of return gas with a cold gas pump.

4. FLOW SHEETS AND PROCESS POINTS OF THE HELIUM AND NITROGEN SYSTEMS:

4.1 Helium System:

Figure 1 shows half of the helium refrigeration system connected to one of the 24 refrigerator stations. Single phase helium flows through a number of magnets. After its temperature has risen to the maximum permissible level, the single phase stream is cooled by the two phase stream in the heat exchanger-quench stopper. The total number of heat exchanger-quench stoppers is determined by the heat load of the magnets, the magnitude of the single phase stream, and the required frequency of quench stoppers.

At the end of the magnet stream the bulk of the single phase fluid becomes two phase fluid and returns to the refrigerator. The rest of the single phase stream becomes 10°K shield flow and returns to the refrigerator at the pressure of the single phase stream.

The flow sheet also shows a liquid helium pump and liquid-gas separator. The pump generates an increase of single phase flow. This in turn increases the liquid fraction of the two phase stream. The advantage of an increased liquid fraction in the two phase stream is greater instantaneous cooling capability. If it is desired to reduce the temperature of the magnets, a cold gas pump could be used in the vapor stream returning to the refrigerator.

Process points for the helium system are shown in Tables I and II. Table I represents the case without use of liquid pump and cold gas pump. Table II represents the case when liquid pump and cold gas pump are being used. The values in both tables are based on heat loads as compiled in Section 5.

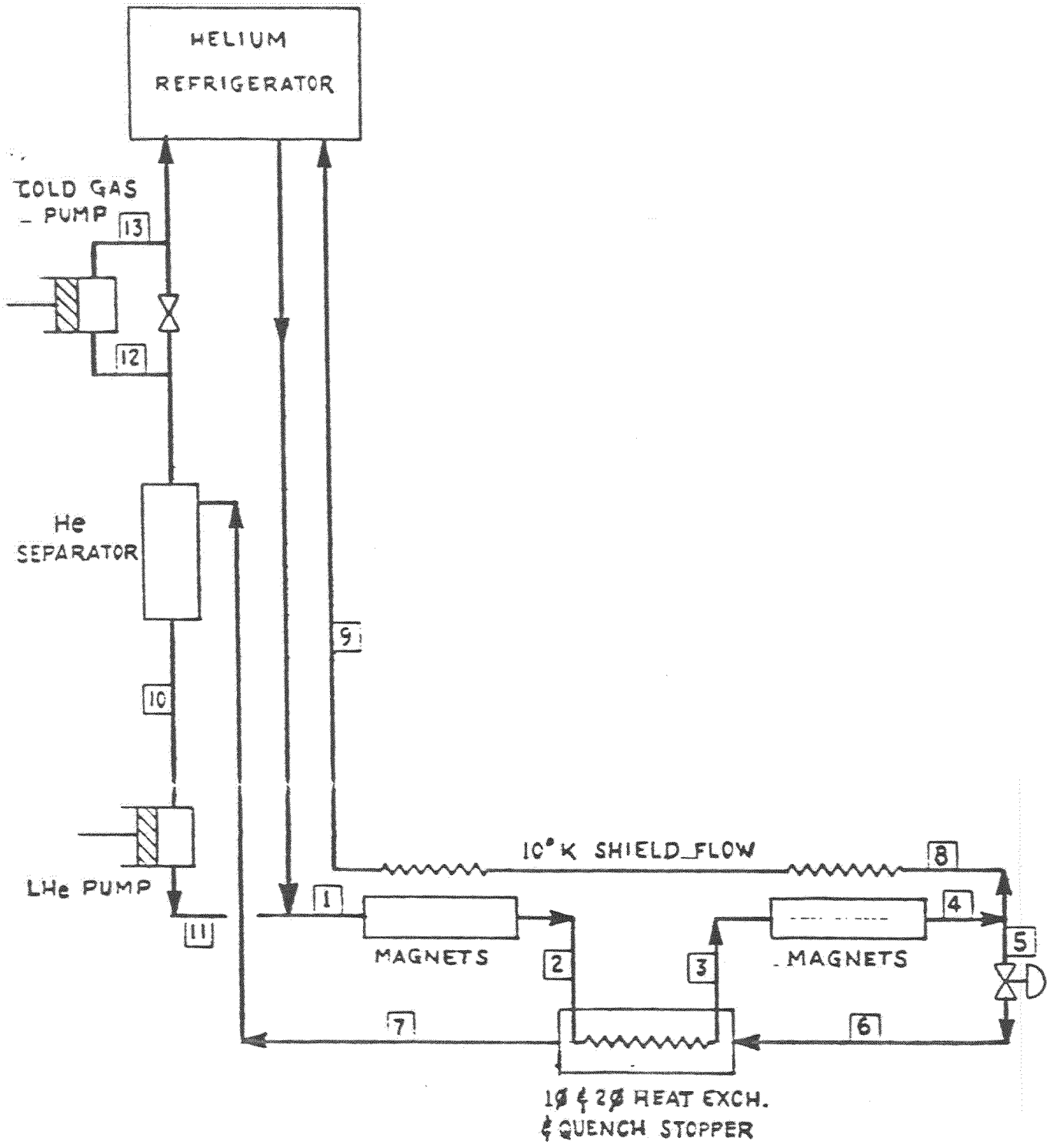

Flow Sheet of Helium System

FIGURE 1

TABLE I

Process Points for 1,800 m of Magnets

Point	Pres. ata	Temp. °K	Enthalpy J/gr	Flow Rate g/sec
1	2.2	4.5	11.10	19.09
2	2.2	4.7	12.50	19.09
3	2.2	4.5	11.24	19.09
4	2.0	4.7	12.50	19.09
5	2.0	4.7	12.50	19.09
6	1.2	4.4	12.50	14.09
7	1.2	4.4	29.94	14.09
8	2.0	4.7	12.50	5.0
9	1.8	10.0	63.57	5.0
10	-	-	-	-0-
11	-	-	-	-0-
12	-	-	-	-0-
13	-	-	-	-0-

TABLE II

Process Points for 1,800 m of Magnets With Circulating and Cold Gas Pump

Point	Pres. ata	Temp. °K	Enthalpy J/gr	Flow Rate g/sec
1	2.2	4.5	11.10	27.5
2	2.2	4.7	12.50	27.5
3	2.2	4.5	11.24	27.5
4	2.0	4.7	12.50	27.5
5	2.0	4.7	12.50	27.5
6	1.2	4.4	12.50	22.5
7	1.0	4.2	23.42	22.5
8	2.2	4.7	12.50	5.0
9	1.8	10.0	63.57	5.0
10	1.0	4.22	9.71	6.17
11	2.2	4.43	10.96	6.17
12	1.0	4.22	30.13	16.33
13	1.2	4.67	31.58	16.33

4.2 Liquid Nitrogen System:

Figure 2 shows the flow schematic of the liquid nitrogen shield system. Stream 1 is a supply stream from an air separation plant. If the air separation plant is not present at the particular location, liquid nitrogen will be passed on as stream 10 which supplies liquid nitrogen to the adjacent system. The flow rate has been chosen at a high enough level to require only one subcooler for the liquid nitrogen stream. Its location is at the helium refrigerator station. The cold vapor from the subcooler will be passed through the helium refrigerator. Extraction of cold from this stream improves the overall efficiency of the process. The local liquid nitrogen storage tank will be used to provide liquid nitrogen in case the supply from the air separation plant is interrupted. Its size will be chosen on the basis of longest foreseeable interruption of supply.

Process points for the system are summarized in Table III:

TABLE III

Process Points for Liquid Nitrogen System

Point	Pres. atm	Temp. °K	Enthalpy J/gr	Flow Rate g/sec
1	.5	71.93	35.09	19.41
2	5.0	74.2	23.15	186.78
3	5.0	74.2	23.15	186.78
4	4.7	74.2	23.15	186.78
5	4.2	83.0	41.19	186.78
6	4.0	74.0	22.68	186.78
7	5.0	74.2	23.15	186.78
8	5.0	80.0	35.09	-
9	.5	71.93	224.18	19.41
10	4.7	74.2	23.15	-

Note: Flow rates are totals for two parallel 1,800 meter systems with common subcooler and pump.

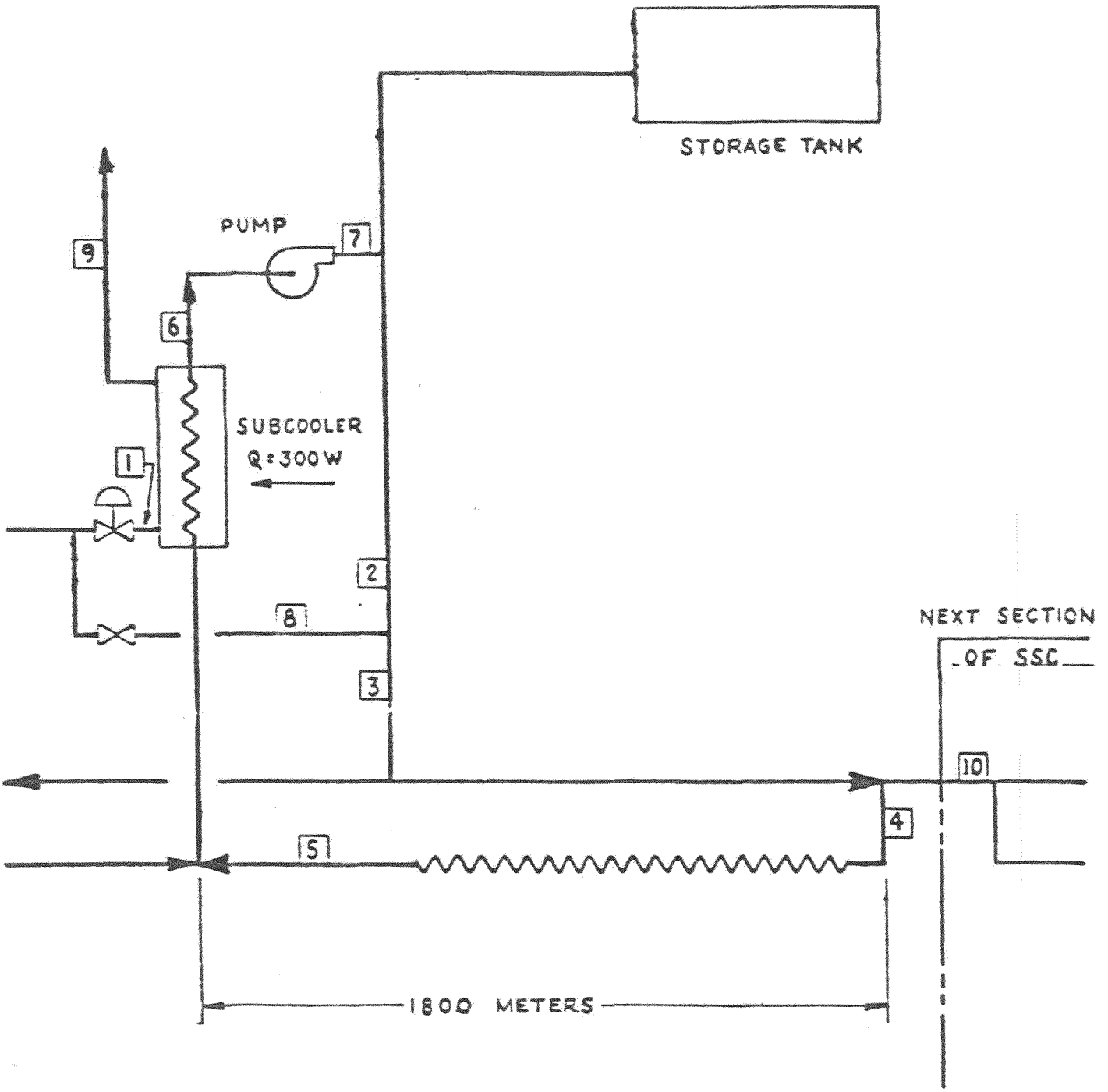

Liquid N_2 Cooled Shield Flow System

FIGURE 2

5. HEAT LOADS OF THE SYSTEM:

5.1 Ambient to 80°K:

5.1.1 Supports of the Liquid Nitrogen Cooled Shield:

The liquid nitrogen cooled shield with superinsulation supply and return line and liquid nitrogen weighs approximately 400 lbs for a 40 ft long magnet. Table IV gives the breakdown:

TABLE IV

Weight of LIN Cooled Shield (Lbs)

1)	Liquid Nitrogen	68.8
2)	2 x 1-1/2 in. IPS, Sch. 5 Pipe	104.0
3)	Shield (.032 in. Copper)	160.0
4)	Superinsulation	46.0
5)	Miscellaneous	21.2
	TOTAL	400.0

To support 400 lbs .04 sq in. of stainless steel hanger or equivalent is provided. If the effective length of the hanger is 2 in., heat leak through the supports will be 1.38 W per magnet (.113 W/m).

5.1.2 Superinsulation on the shield is assumed to be 60 layers with a thermal conductivity of 1×10^{-6} W/cm °K. Thickness of the insulation is 1 in. Surface area of the shield is approximately 120 ft^2 per magnet. Heat leak is then 9.67 W/magnet (.793 W/meter).

5.1.3 Crossovers between magnets will be approximately 18 in. long. Heat leak in the crossover then will be of the order of .363 W per magnet (.030 W/meter).

5.1.4 At the refrigerator station there will be piping, a subcooler, and a liquid pump. The total heat leak of this equipment will be assumed to be 300 W or 150 W per 1,800 meter string.

5.1.5 Total heat load for the liquid nitrogen system (3,600-m) of one station will then be

$$300 + 2 \times 1800 \times (.113 + .793 + .030) =$$
$$= 3,670 \text{ W}$$

In order to remove this quantity of heat, a liquid nitrogen stream of 93.39 g/sec is required per 1,800 meter magnet string. Pump work to raise the pressure of the liquid by 1 ata is of the order of 90 W and is insignificant relative to the total load of the system.

5.2 80 to 10°K:

5.2.1 Supports of the 10°K Shield:

The 10°K shield weighs approximately 480 lbs per magnet, if constructed of 6 in. OD, .065 in. wall tube and 6 in. IPS, Schedule 5 pipe. We need approximately .05 sq in. of stainless steel to support. Heat leak is then of the order of .35 W per magnet when length of temperature gradient in the support is 1-1/4 in.

5.2.2 Support of the 4.5°K Magnet:

If the magnet is supported independently from the 10°K support, longer sections of stainless steel will be available between 80°K and 10°K heat intercepts on the supports. The magnet weighs roughly 2,000 lbs, and the total cross section of hangers will be of the order of .2 sq in. The exact number may be higher dependent on the manipulations necessary to position the magnet properly. With a length of 3 in. for temperature gradient, heat intercepted from the magnet supports is then of the order of .58 W per magnet.

5.2.3 Radiation:

The ratio of 10°K shield to 80°K shield surface area is approximately .6. With effective emissivities of 8% for each surface, total radiant heat flux will be 7.2 mW per sq ft of 10°K shield area. Total radiant heat flux is then .50 W per magnet.

5.2.4 There will be some heat gain in the crossover between magnets. Assume no mechanical hangers and radiation only. Assume poor emissivities of .16 and a length of 18 in. Heat flux is then .04 W per crossover.

5.2.5 Total heat leak to the 10°K shield system is then 1.47 W per magnet (.12 W/meter) or 217 W for an 1,800 meter long string.

5.3 10 to 4.5°K:

5.3.1 Radiation:

Radiation may be assumed to be negligible when the magnet is surrounded by a 10°K shield.

5.3.2 Supports:

Assume a length of 1 in. of stainless steel between 10°K and 4.5°K. With .2 sq in. of metal,heat leak will be .015 W per magnet (.0012 W/meter).

5.3.3 Crossovers:

In the crossover we may not want to enclose the 4.5°K piping with a 10°K shield. In that case there will be radiation from the 80°K shield. The ratio of 4.5°K surface area to 80°K surface area will be .25 or less. With an emissivity of .16 for both surfaces, radiant heat transfer to the 4.5°K surface will be .020 W per crossover.

5.3.4 Synchrotron radiation is .116 W per meter or 1.415 W per magnet.

5.3.5 Total heat load at 4.5°K is then of the order of 1.67 W per magnet or 247 W for an 1,800 meter long string of magnets.

5.4 Summary of Heat Loads:

Table V summarizes the heat loads at the various temperature levels. It should be noted that the heat to be removed at the 80°K and 10°K levels is the difference between what flows in and out. It has been assumed (as a safety factor) that the refrigeration system has to handle the total loads as indicated in Table V:

TABLE V

Heat Loads per Meter of Magnet Length in Watts

		Temperature Range		
		300-80	80-10	10-4.5
1)	Radiation	.793	.0410	-
2)	Supports	.113	.0762	.0012
3)	Crossover	.030	.0033	.0200
4)	Miscellaneous	.083	-	-
5)	Synchrotron	-	-	.116
	TOTAL:	1.019	.1205	.1372

6. POWER REQUIREMENTS OF THE REFRIGERATION SYSTEM:

Table VI summarizes the power requirements of the system:

TABLE VI

Power Requirements of the System

	MW
3,000 ℓ/hr of Liquid Helium	2.49
1,800 ℓ/hr of LIN for Helium Liquefier	1.78
176 kW of Refrigeration @ 80°K	9.97
20.8 kW of Refrigeration @ 80 to 10°K) 23.7 kW of Refrigeration @ 4.5°K)	14.40
Miscellaneous (N_2 Vacuum Pumps, Liquid Helium Pumps, Insulation Vacuum Pumps)	2.50
TOTAL:	31.14

It should be noted that the 20.8 kW of refrigeration provided in the 10°K shield system will be generated by the satellite refrigerator. The refrigeration cycle handles the return of the gas from the 10°K shield system and the two phase flow simultaneously. Section 8 deals in more detail with the helium refrigerator.

Since the helium refrigerator requires some nitrogen precooling, it has been assumed that this cooling is provided by the cold nitrogen vapor which is generated in the shield LIN subcoolers located at the refrigerator stations. Section 8 shows that there is sufficient cold nitrogen vapor. As a consequence, the 80°K refrigeration power requirement is based on generating 88.6 tons per day (932 g/sec). This nitrogen vapor is pumped by a vacuum pump operating at ambient temperature from .4 to 1.0 ata. Power required to pump 932 g/sec in one stage is 900 bhp.

7. PRESSURE DROPS:

7.1 Magnet Pressure Drop:

We will assume that 1 sq. in. of flow area is available and that the hydraulic diameter is .25 sq. in. Pressure drop in the magnets is then of the order of .00093 psig/meter. This pressure drop is based on a flow rate of 27.5 g/sec. This is double the flow rate required to remove heat loads as given in Table V. For 1,800 meters, ΔP = 1.67 psig. It is necessary to add a number of velocity heads to this pressure drop in order to generate a realistic number. Allow 300 velocity heads for 150 magnets. Pressure drop for these is .09 psig. Total pressure drop in the magnet system is then of the order of 1.76 psig.

7.2 Single Phase/Two Phase Heat Exchanger Pressure Drop:

Without knowing anything about the design of the exchanger, a total of 1.5 psig is allotted to all exchangers and crossovers between magnets and exchangers.

7.3 If the single phase flow rate is increased, pressure drop will increase approximately by mass flow rate to the 1.8 power. Doubling the flow rate then increases the pressure drop by a factor 3.5.

7.4 At this time, it has been assumed that the two phase return line will be a 1-1/2 in. IPS, Schedule 5 pipe (ID = 1.77 in.). Pressure drop in this pipe has been calculated as a function of quality of the fluid. This quality changes in increments when passing through a single phase/two phase heat exchanger. The calculated pressure drop is based on a flow rate of 22.5 g/sec of which approximately 61% vaporizes in returning to the refrigerator. The calculated pressure drop is .77 psig for 1,800 meters.

7.5 Liquid nitrogen for cooling of the shield is carried in a 1-1/2 in. IPS, Schedule 5 pipe (ID = 1.77 in.). Pressure drop of 3,600 meters of pipe for a flow rate of 139 g/sec is of the order of 1.35 psig.

7.6 Distance between Single Phase/Two Phase Heat Exchangers:

We will allow a temperature rise of approximately .2°K for an enthalpy gain of 1.25 Joules per gram. Heat taken up by the single phase stream is then 27.5 x 1.25 = 34.4 W. Distance between heat exchangers is then 250 meters. We can increase the distance between refrigeration stations by increasing the flow rate of single phase helium. This in turn will result in returning liquid helium in the two phase stream to the refrigerator. To circulate this helium, it is necessary to pump it from 1.0 ata (return point of two phase stream) to 2.2 ata (starting point of single phase flow). It is not difficult to pump liquid helium. For instance, a reciprocating pump with a close-fitting cylinder and piston arrangement will operate at a high efficiency of 80% plus. In that case, conditions at inlet and discharge of the pump will be as shown in Table VII:

TABLE VII

Liquid Helium Pump Performance

P	=	1.0 ata	P	=	2.2	P	=	2.2
H_L	=	9.71 J/gr	H	=	10.71	H	=	10.96
T	=	4.22°K	T	=	4.38	T	=	4.43
S	=	3.454 J/gr °K	S	=	3.454	ΔH	=	1.25
V_s	=	8.00 cc/gr				V_s	=	8.19
			ΔH	=	1.0			
			η	=	.8			

7.7 Heat exchanger between Single and Two Phase Flow:

The simplest arrangement is shown in Figure 3. Surface area available for heat transfer on inside of copper tube is 1,030 cm^2 per meter length. Minimum amount of heat transfer required for one string of magnets is approximately 35 W. Mean temperature difference between the streams is .16°K. With an overall coefficient of .03 W/cm °K, required surface area is 7,300 cm^2. Length of copper tube is then approximately 7 meters.

The pressure drop of the exchangers will be accounted for by increasing the pressure drop of the two phase return line by a factor of 1.05. There are other arrangements possible for the exchanger. For instance, a number of parallel finned tubes submerged in boiling liquid will make a good subcooler.

8. HELIUM REFRIGERATION PROCESS:

Figure 4 shows a schematic of a helium refrigeration process. The process shows continuous heat transfer between single phase and two phase fluid. Intermittent heat transfer does not change the requirements for the refrigerator. The process also shows an excess of two phase return flow. The liquid in stream 12 will be separated and will be pumped as stream 13 and returned to the magnet system. The 10°K shield stream will warm up to 10°K and will flow to the refrigerator warm end at an elevated pressure of approximately 1.8 ata.

The flow sheet shows process points which are tabulated in Table VIII. Also, on the flow sheet are shown heat loads at various temperature levels in the refrigerator and the amounts of heat generated and removed at various components of the system. The amounts of heat removed by the two phase flow and shield stream are those of 3,600 meters of two parallel magnet systems. Streams 46, 47, and 48 represent nitrogen gas flow. This gas is provided by the boiloff from the nitrogen cooled shield of the magnets. It turns out that the amount available (Table III) is just about equal to the amount required.

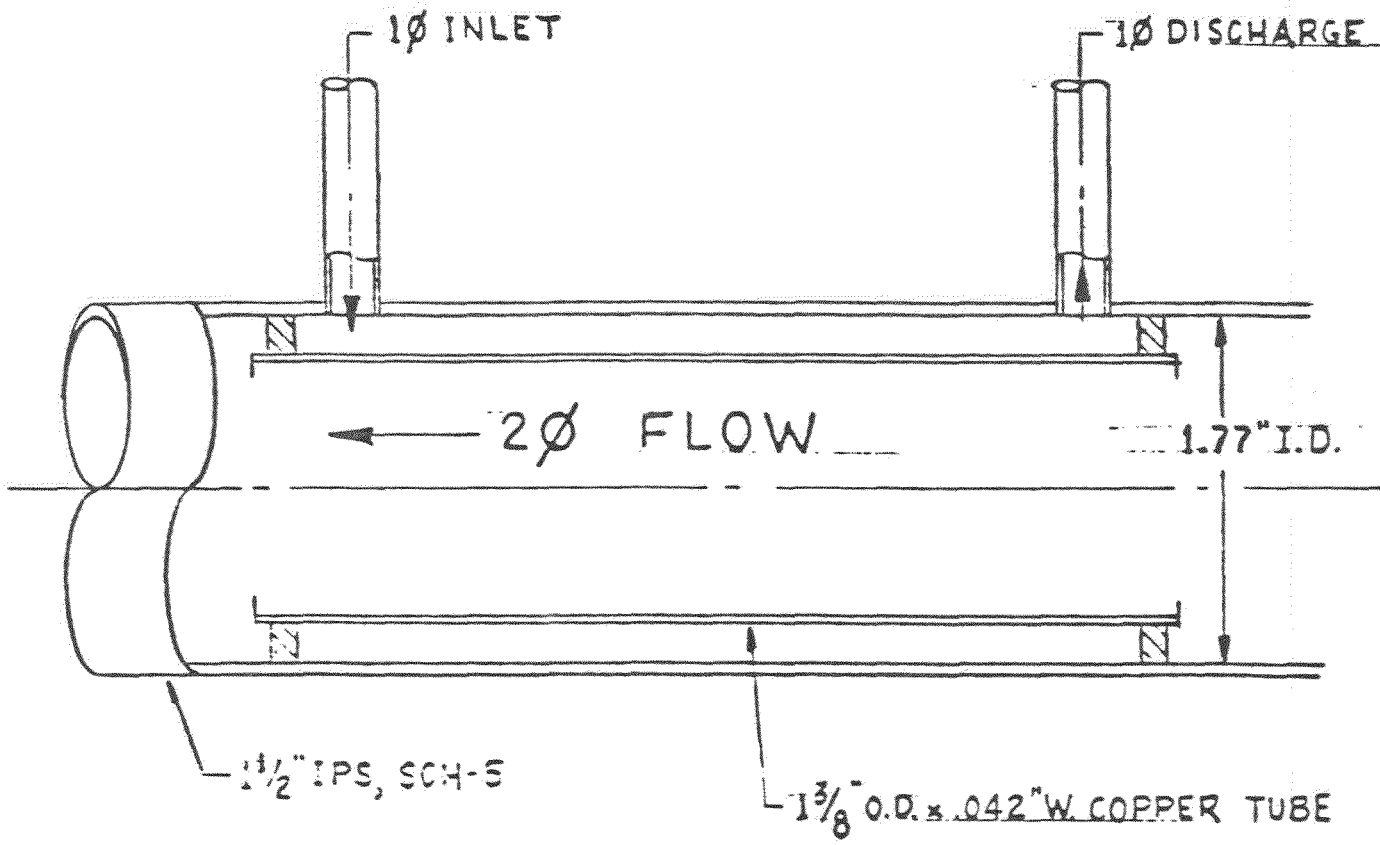

Heat Exchanger Arrangement

FIGURE 3

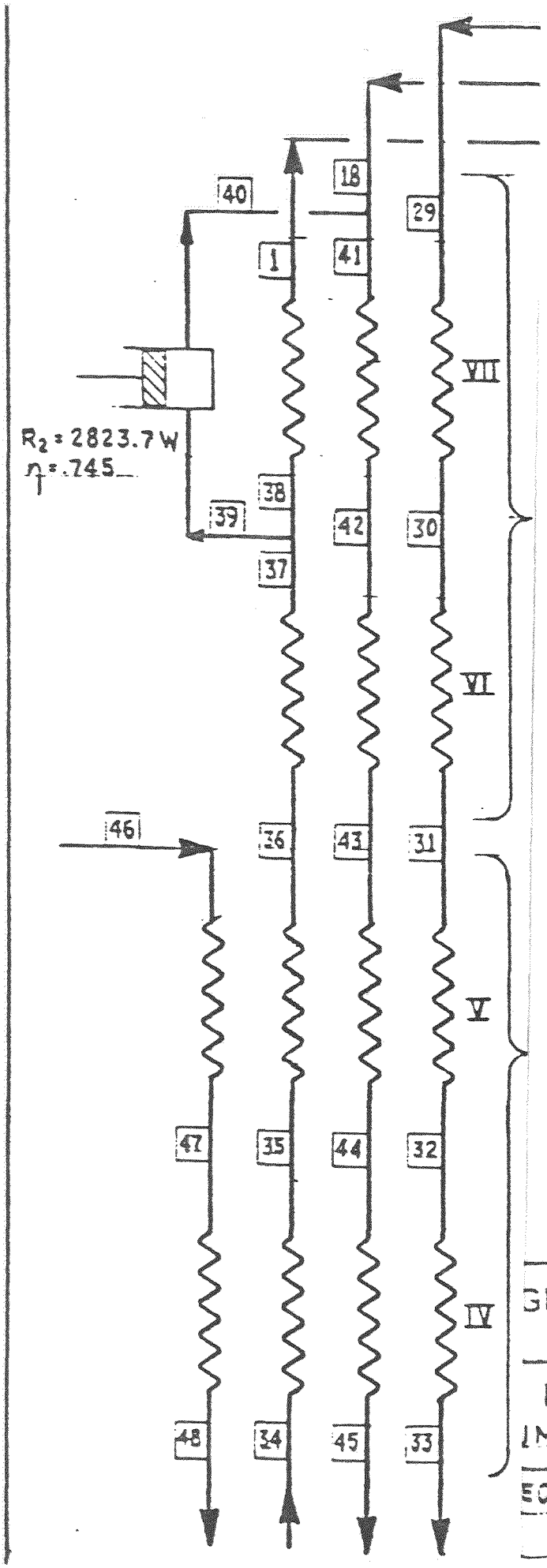

GENIC CONSULTANTS, INC.
ALLENTOWN, PA.

FIGURE 4
IM REFRIGERATOR PROCESS

ECKY 11-30-83 PROJ. NO. 593

DRAWING NO.

TABLE VIII

Process Points

Point	Pres. ata	Temp. °K	Enthalpy J/gr	Flow Rate g/sec
1	16.0	17.0	92.02	139.47
2	16.0	7.05	27.19	139.47
3	2.3	5.2	18.5	139.47
4	2.25	5.2	18.5	139.47
5	2.25	5.2	18.5	139.47
6	2.2	4.5	11.24	139.47
7	2.2	4.5	11.24	85.32
8	2.2	-	11.10	110.0
9	2.0	4.7	12.50	110.0
10	2.0	4.7	12.50	90.0
11	1.2	4.42	12.50	90.0
12	1.0	4.22	23.42	90.0
13	1.0	4.22	9.71	24.68
14	2.2	4.43	10.96	24.68
15	2.0	4.7	12.50	20.0
16	1.8	10.0	63.57	20.0
17	1.8	10.0	63.57	20.0
18	1.8	16.7	100.04	20.0
19	2.25	5.2	18.5	-0-
20	1.8	4.91	18.5	-0-
21	1.8	4.91	22.84	-0-
22	2.2	4.5	11.24	54.15
23	1.2	4.42	11.24	54.15
24	1.2	4.42	29.94	54.15
25	1.0	4.22	30.13	65.32

-continued-

TABLE VIII (cont'd.)

Point	Pres. ata	Temp. °K	Enthalpy J/gr	Flow Rate g/sec
26	1.2	4.67	31.58	65.32
27	1.2	4.51	30.84	119.47
28	1.2	4.51	30.84	119.47
29	1.2	16.7	100.42	119.47
30	-	-	-	119.47
31	1.1	79.0	425.2	119.47
32	-	-	-	119.47
33	1.0	295.0	1547.0	119.47
34	16.5	300.0	1579.0	181.39
35	16.25	-	-	181.39
36	16.25	80.0	433.8	181.39
37	16.1	30.0	167.4	181.39
38	16.1	30.0	167.4	139.47
39	16.1	30.0	167.4	41.92
40	1.8	16.7	100.04	41.92
41	1.8	16.7	100.04	61.92
42	1.75	-	-	61.92
43	1.7	79.0	425.2	61.92
44	1.65	-	-	61.92
45	1.6	295.0	1547.0	61.92
46	.5	71.93	224.18	19.16
47	-	-	-	19.16
48	.4	295.0	457.05	19.16

Power requirements of the process has been calculated to be approximately 800 bhp or 600 kW for helium compression. These numbers are based on the efficiencies of cold components as indicated in Figure 4. Compressor efficiency has been assumed to be 70% for the booster compressor (stream 33) and 65% for two stage compression of stream 45 plus discharge of booster compressor.

It should be realized that the type of expander to be used has not been specified. However, the wet expander could be a reciprocating expander of the type now used as dry engines for the Fermilab satellite refrigerators.

The warm expander needs to provide more refrigeration than the presently available reciprocating expanders can provide. A desirable replacement for the reciprocating expander would be a turbine. The major problem of the turbine is that for most reliable operation, conditions should be steady state. Surges in the magnet system need to be kept from reaching the liquefier. Some innovative engineering needs to be done to realize this.

9. REDUCTION OF TEMPERATURE OF THE MAGNETS:

Magnet temperature is reduced by reducing temperature of the two phase flow stream. This in turn is accomplished by reducing pressure. In order to do this effectively, it is necessary to increase the diameter of the two phase return line. An increase from 1-1/2 to 2 in., Schedule 5 pipe increases the diameter by a factor 1.268. Pressure drop is reduced then by $1.268^{4.8}$ or 3.126. Part of this factor is given up because of reduced density of the vapor. It appears that a reduction in temperature from 4.4 to 3.6°K is possible without increase in pressure drop through an increase of two phase return line from 1-1/2 to 2 in. IPS, Schedule 5 pipe.

In order to generate the low pressure, a vacuum pump is required. Using a cold pump provides the advantage of maintaining the same pressures in the heat exchanger and piping of the refrigerator. This allows use of the same heat exchangers and prevents helium-carrying pipes at pressures below atmospheric to be in contact with ambient air. Use of the cold gas pump also provides the advantage of using a small piece of equipment. Displacement of the pump for the flow rates given in Table VIII (65.3 g/sec at .5 ata and 3.56°K) is 7,540 cc per sec. A piston of 4.75 in. diameter with a stroke of 4.75 in. running at 360 rpm will do this.

The disadvantage of operating the pump at low temperature is the increased demand for refrigeration. This amounts to 500 W when pumping 65.3 g/sec from .5 to 1.2 ata (eff = .8). For the total system, cost in power is then of the order of 24 x .5 x 330 = 3,960 kW.

It is obvious that reduction of heat load at the lowest temperature level to a minimum is essential when contemplating reduction in operating temperature. For this reason, it would be very advantageous if synchrotron heating could be removed at a higher temperature level.

10. HANDLING OF A QUENCH:

It will be possible to discharge fluid from the single phase channel to two phase channel and somewhat later to the 10°K shield system. Pressure drop of the proposed 10°K shield system is very low, and its volume is approximately four times as large as that of the single phase system. Discharging relatively warm gas into this shield does not result in a large pressure excursion in the 10°K shield line and also does not impair its function as heat shield to a great extent.

The single phase/two phase heat exchangers will act as cryogenic quench stoppers. Length of time during which they prevent the carryover of the quench will be determined by the inventory of cold liquid present in the device. Cooling and filling of the quenched magnets will be by flowing liquid helium into the magnets and returning warm vapor through a non-jacketed bypass line. Once the return gas becomes cold it may be returned by means of the 10°K shield system and/or the two phase return line.

11. MAGNET COOLDOWN:

11.1 Cooldown to 80°K:

Weight of the magnets is of the order of 150 lbs/meter. Cooldown duty from ambient temperature to 80°K is then of the order of 5.25×10^6 Joules per meter. Helium gas at 80°K will remove approximately 1,200 Joules per gram. Per magnet requirement is 53,375 grams (12.2 meter length).

To cool the magnets, a warm header will be run in parallel with the magnets. If this header does not need to be used for removing quench fluid, size can be greatly reduced. Consider a cooldown flow rate of 10 g/sec. This rate will cool one magnet in 1-1/2 hours and a string of 1,800 meter length in 225 hours. In order to reduce pressure drop, the gas needs to flow at an elevated pressure of 5-6 ata. The pressure drop for a completely warm system is then:

a) Magnets (at 6 ata) .0484 psig/m.

b) 1-1/2 in. IPS, Schedule 5 return header - 3.4×10^{-3} psig/m (at 2 ata).

It appears that a number of bypasses are required in order to maintain a flow rate of 10 g/sec when all magnets are warm. When the magnets are cold, pressure drop in the cold magnets is reduced by a factor 3. This allows us to cool all of the magnets in a string of 1,800 meters with a pressure drop in the range of 30-40 psig.

11.2 Cooldown of Magnets to 4.5°K:

This may be accomplished by pushing liquid helium into the string after cooldown to 80°K has been completed. Amount of refrigeration supplied by a liter of liquid helium when warming gas to 80°K is some 50,000 Joules. A 12.2 meter long magnet requires removal of approximately 5×10^6 Joules. Consumption of liquid helium is then 100 liters per magnet or 14,754 liters per 1,800 meter string. It will be better to first cool with helium gas of 15°K. This gas can take up 340 Joules per gram. Total mass flow required for an 1,800 meter long string is then of the order of 2.17×10^6 grams. At 20 grams/sec, time required is 30 hours.

12. REPLACEMENT OF A MAGNET:

Before the vacuum system of the magnet string is broken with nitrogen gas, it will be preferable to warm the magnets to 80°K. The most convenient method by which this is accomplished is the application of electric heat. In order for a cold magnet to reach 80°K, approximately 3.5×10^6 Joules need to be added. An electric heater with a capacity of 300 W will do this in roughly 3-1/4 hours.

Once the magnet has reached 80°K, vacuum may be broken with dry nitrogen gas and the magnet connections between magnet to be removed and adjacent magnets broken. The total number of connections to be broken is rather small, and it should be possible to accomplish this in a few hours. During this time, the string of magnets warms up due to heat flow through the superinsulation into the shield and from there to the magnet. An estimate of the rate of heat transfer may be made by assuming conduction through a layer of nitrogen gas of 1 in. thick between diameters of 6.5 and 4.5 in. If we assume a temperature integral for nitrogen gas between 290°K and 90°K of .035 W/cm, we find a heat flux of 730 W into the magnet. Rate of heating of magnet at start of the process is then 3.16 J/gr hr or dT/dt = 20°K/hr. This flux decreases with time.

It is obvious though that loss of vacuum for any length of time essentially will require a complete cooldown of the string. This in turn means a relatively long period of time before the superconductivity of the magnets will be reestablished. The use of a fairly large number of vacuum breaks would reduce the number of magnets which needs to be recooled after the replacement magnet has been installed.

ELEVATION VIEW
SECTION A-A

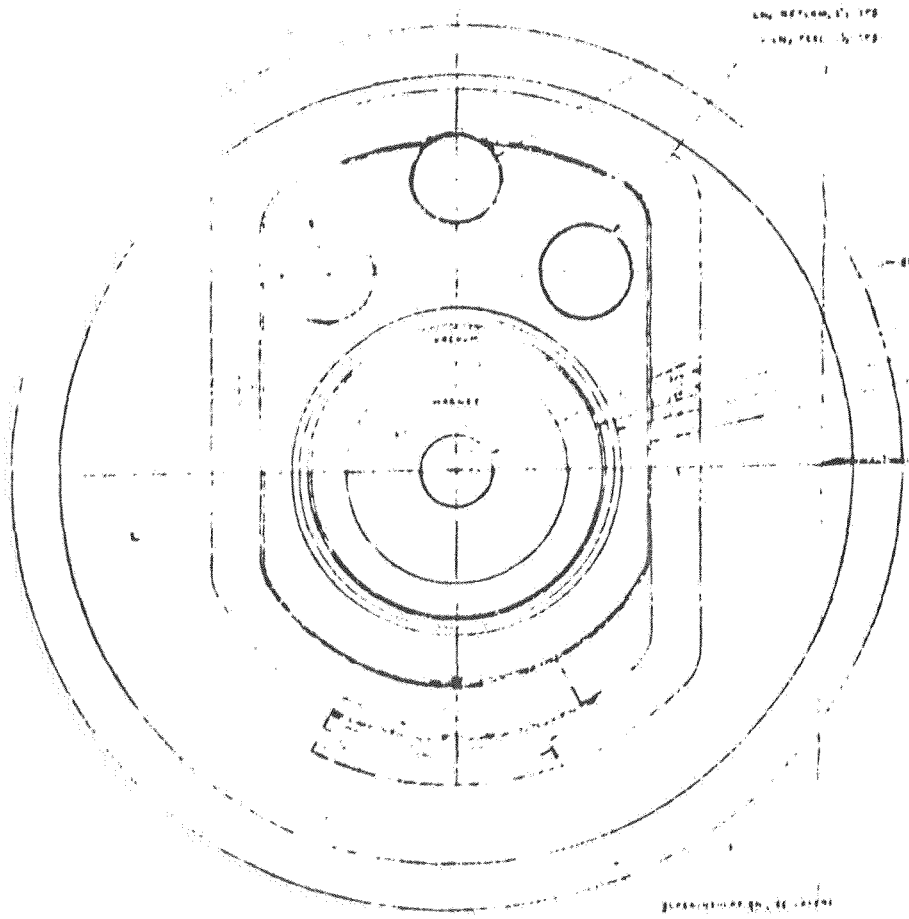

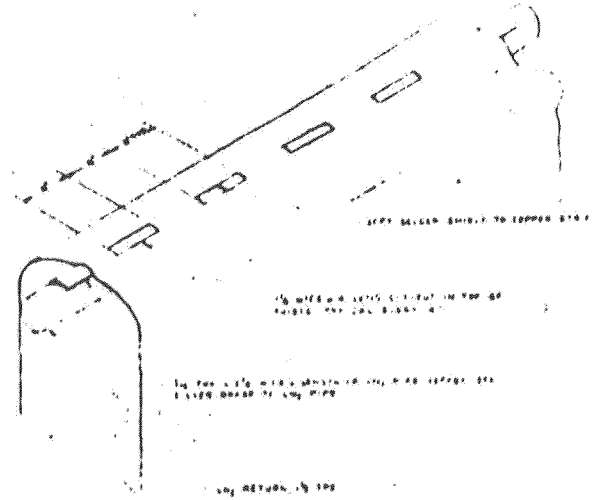

SHIELD ATTACHMENT DETAILS

CRYOGENIC CONSULTANTS INC

FERMI NATIONAL ACCELERATOR LABORATORY

ST MAGNET WITHOUT IRON

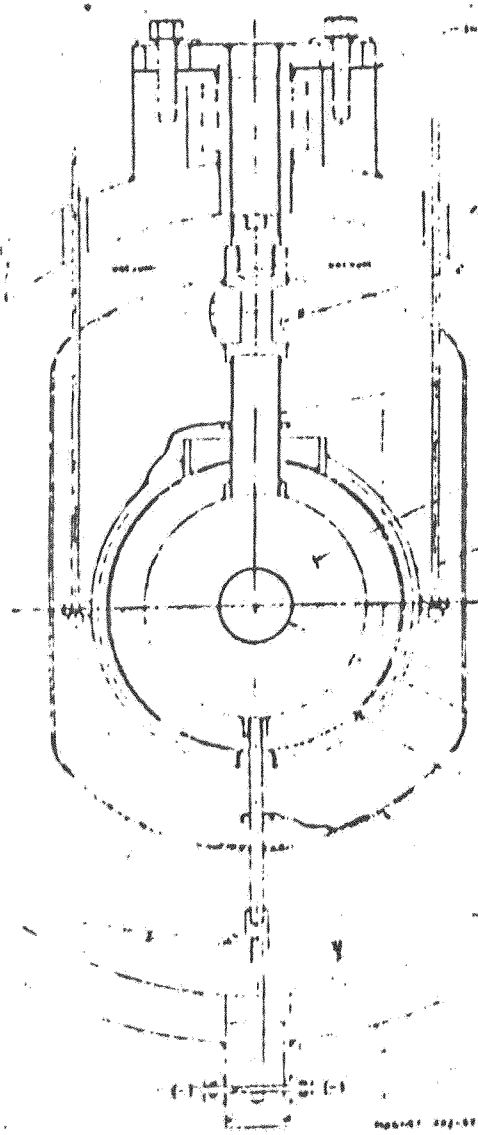

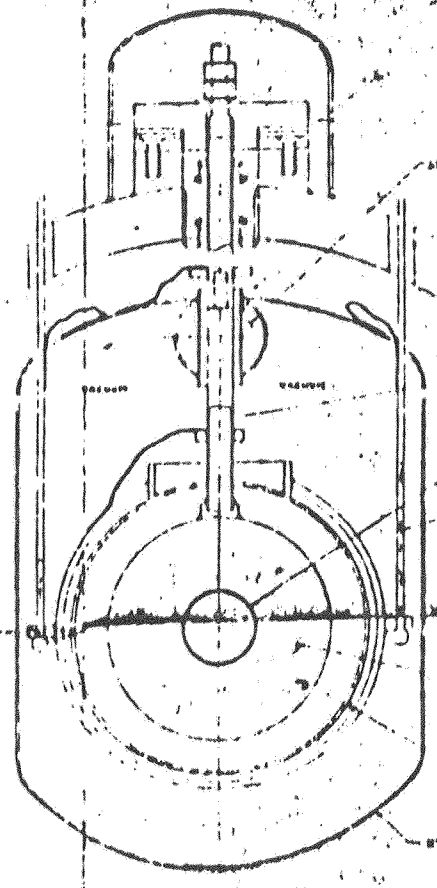

CRYOGENIC CONSULTANTS INC

MISC SUPPORT DETAILS
ST MAGNET WITHOUT GRUN